May 23, 1950 M. MORAND 2,508,765

VACUUM PUMP

Filed July 21, 1947

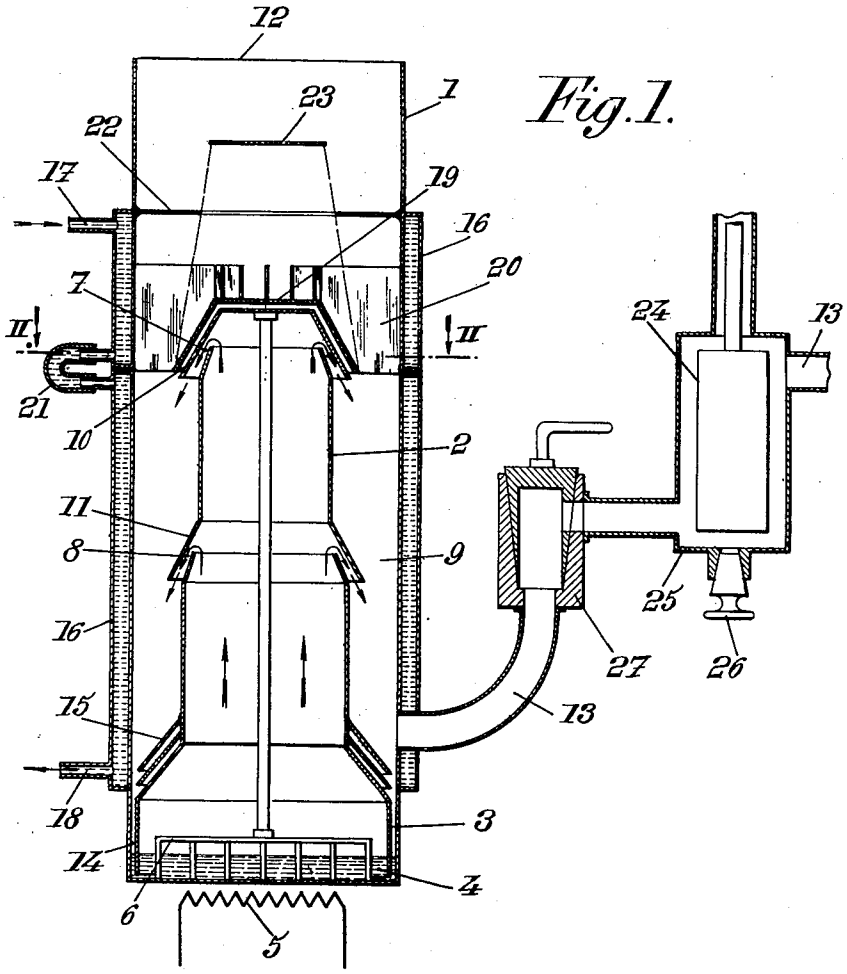

Fig. 1.

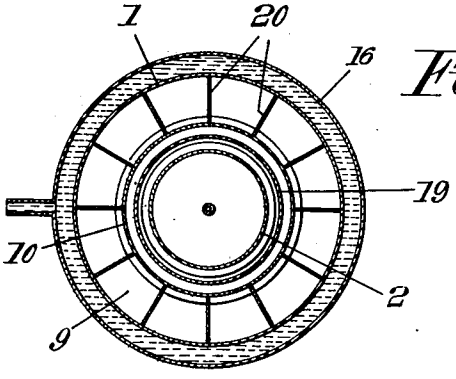

Fig. 2.

INVENTOR
MAX MORAND
BY Leon M. Strauss

Patented May 23, 1950 2,508,765

UNITED STATES PATENT OFFICE

2,508,765

VACUUM PUMP

Max Morand, Le Plessis-Robinson, France, assignor to Centre National de la Recherche Scientifique, Paris, France

Application July 21, 1947, Serial No. 762,459
In France September 25, 1941

Section 1, Public Law 690, August 8, 1946
Patent expires September 25, 1961

4 Claims. (Cl. 230—101)

1

The present invention relates to vacuum pump making use of the condensation of the vapour of a driving fluid such as oil or mercury.

In known pumps of this kind, the pumping rate drops rapidly when the pressure of the gas to be evacuated becomes very low, for instance when it is below one barye. Furthermore, this rate is much lower for light gases (hydrogen, deuterium, helium) than for heavy gases.

The chief object of my invention is to increase the rate of pumping of said pumps, especially for very light gases, and to prevent this rate from decreasing when the pressure of the gas to be evacuated becomes very low. This last result, although obtained for all gases, is particularly important in the case of light gases.

My invention consists chiefly in providing, about certain hot inner walls or partitions of the pump and on the outside thereof, a second wall which is cooled and thermally insulated with respect to said hot inner wall or partition, so as to prevent the molecules of vapour from coming into contact with the outer surface of said hot wall.

Another feature of my invention consists in placing in the inlet of a condensation pump, above the deflector cap, one or several discs and one or several cooled rings intended to stop molecular jets of the uncondensed vapour in the pump.

Still another feature of my invention relates to a trap interposed between the condensation pump and an intermediate pump and consists in cooling this trap by means of a cooling fluid at a temperature lower than 0° C., such as liquid air or carbonic snow, preferably, a cock being provided between the condensation pump and the trap to permit of separating these elements from each other.

A preferred embodiment of my invention will be hereinafter described with reference to the accompanying drawings, given merely by way of example and in which:

Fig. 1 diagrammatically shows, in axial section, a condensation pump made according to my invention;

Fig. 2 is a section on the line II—II of Fig. 1.

The pump shown by the drawings includes a water cooled outer wall 1 and an inner collector 2. The lower end 3 of this collector is of enlarged section and forms a boiler in which the driving fluid 4, for instance oil, is vaporized. This oil 4 is heated by an electric resistance 5 the heating action of which is made as homogeneous as possible by a heat distributor 6. The oil vapours ascend inside collector 2, as indicated by the arrows and flow out therefrom through apertures 7

2

provided at the upper end of the collector, and also eventually through apertures 8 provided at an intermediate level, into the annular space 9 between collector 2 and the outer wall 1 of the pump. The outflowing vapour jets are deflected by deflectors 10 and 11, which surround apertures 7 and 8 and give the vapour jets the shape of conical sheets directed downwardly.

These vapour jets suck in, through the upper aperture 12 of pump body 1, the gases to be carried along to create the desired vacuum, and these gases are evacuated from the pump through conduit 13 which communicates with the lower part of space 2.

The vapours of the driving fluid condense by contact with the cooled wall of pump body 1 and return to the oil bath 4, passing through the small annular space 14 existing between the portion 3 of the collector and the wall 1 of the pump body.

Deflectors 15 are provided, to stop the oil vapours that might ascend through annular space 14.

The wall of the pump body 1 may be cooled in any suitable manner, for instance by means of a cooling fluid such as water flowing through a jacket 16 extending over at least a substantial portion of wall 1. The inlet of this jacket may be at 17 and its outlet at 18.

In a pump of this kind it is necessary to prevent the molecules of vaporized driving fluid from ascending through the pump inlet toward the space where a vacuum is to be produced.

For this purpose, and according to an important feature of my invention, certain portions of the hot wall of the collector are surrounded by a second wall cooled and thermally insulated with respect to said wall of the collector. Thus in the pump shown by the drawings, the deflector cap 10 provided at the upper end of the inner collector of the pump is surrounded by a second cap 19 the shape of which corresponds to that of cap 10 and which is thermally insulated from this cap by an interval of some millimeters, inside which prevails the vacuum existing inside the pump. Furthermore, the outer cap 19 is cooled, for instance, by the fact that it is thermally connected with the cooled wall of pump body 1 through fins 20 fixed, on the one hand, to the second cap 19 and, on the other hand, to wall 1 and which thus serve also to fix the second cap 19. The gas to be sucked by the pump obviously flows freely through the intervals between fins 20.

Experience teaches that, owing to the provision of the second cap 19, cooled and insulated with respect to the first cap 10, any inflow of

vapour molecules into the space above cap 18 can be prevented. This effect may be explained as follows: without this second cap 19, a portion of the vapour molecules would enter into contact with the hot external surface of deflector cap 18 and, being not condensed, would flow on from this hot surface toward the inlet of the pump. The second cap 19, on the one hand prevents contact of the molecules with the hot surface of deflector 18 and, on the other hand condenses the molecules that strike it, and this due to the fact that it is cooled. These molecules therefore cannot ascend above the cap.

For constructional reasons, the pump body may be divided, as shown by Fig. 1, into two portions, the partition line being located below the lower level of fins 20, whereby the upper portion of the pump includes these fins, and also the cooled cap 19, whereas the lower portion of the pump includes all the other elements. The two portions of the cooling jacket of the pump communicate together through a rubber tube 21.

It should be noted that this division of the pump into two portions is not at all necessary but facilitates, in some cases, the taking to pieces and cleaning of the pump.

According to another feature of my invention, I provide, above the deflector cap provided at the upper end of the pump inner collector, one or several rings 22 and one or several discs 23 cooled by their connection with wall 1, these rings and discs being intended to stop and to condense the last traces of uncondensed oil vapour that might still ascend above the pump collector. The diameters of these discs and rings are advantageously calculated so that the conical surface passing through the outer edge of cap 19 and the inner edge of annular plate 22 intersects plate 23 at a small distance (some tenths of a millimeter) on the inside of the edge thereof, as indicated in dotted lines in Fig. 1.

Still another feature of my invention relates to a trap which is advantageously interposed in the conduit 13 that connects the output of the condensation pump with the input of an intermediate pump (not shown on the drawing).

According to my invention, this trap is cooled by a cooling fluid at a temperature below 0° C., for instance by means of carbonic snow or liquid air present in the chamber 24 provided inside this trap. This chamber 24 is itself enclosed in a casing 25 so that an interval is left between the outer wall of chamber 24 and the inner wall of casing 25, this interval belonging to conduit 13. A plug 26 permits of evacuating the products condensed in the trap. A cock 27 is preferably interposed between the trap and the pump outlet, to permit of cutting off these elements from each other.

Up to now, when the oil used in the pump was heated to a high temperature to give the vaporized molecules a higher velocity and the vapour a higher density (these conditions being necessary to ensure a high pumping speed for light gases which diffuse very easily in the wrong direction in the vapour intended to drive them along), the pump got out of action, due to the production of parasitic vapour traces constituted in particular by oil carbonization products. This drawback is avoided by the liquid air or carbonic snow air trap in which these traces of parasitic vapours come to condense. Owing to this feature of my invention, it is therefore possible to heat the oil at very high temperature without the operation of the pump being impaired. On the

contrary, the gradual elimination of the traces of parasitic vapours gives a limit vacuum which goes constantly improving.

By way of example, I will now give results obtained on the one hand with pumps of the kind shown by the drawing and including the features according to my invention and on the other hand with pumps unprovided with the features according to my invention. An oil vapour condensation pump the suction area of which (between cap 18 and the body 1), was 120 square centimeters had, when not provided with the features according to my invention, a pumping rate of 150 liters per second for air and only 90 liters per second for hydrogen under a pressure of one barye. This pumping rate further dropped when the pressure of the hydrogen to be evacuated was below one barye; at 0.15 barye, the pumping rate was only 30 liters per second. Furthermore, traces of oil vapour were found to flow back in greater and greater amounts above the pump. In order to stop them completely, it would be necessary to make use of baffle devices which would still further reduce the pumping rate.

The same pump provided with the above described features has a pumping rate of 700 liters per second for hydrogen; this pumping rate is constant down to the lowest pressures, and absolutely no trace of oil is to be observed above the pump.

A pump with two vapour jets in tandem, placed in the same pump body, having a total surface of suction (between the cap provided at the top end of the inner collector of the pump and the pump body) of 200 sq. cm. has a pumping rate of 1.5 cubic meters per second. At the pressure of 0.15 barye, the pumping rate is therefore 30 times greater than the pumping rate of the pump unprovided with the above mentioned devices.

The influence of the liquid air or carbonic snow trap is shown by the following observations:

A pump as shown by the drawings, gets out of action for an intensity slightly above 11 amperes in the heating resistance when there is no liquid air in the trap. On the contrary, if liquid air is placed in the trap, the same pump still works perfectly well with 16 amperes in the heating resistance.

In a general manner, while I have, in the above description, disclosed what I deem to be practical and efficient embodiments of my invention, it should be well understood that I do not wish to be limited thereto as there might be changes made in the arrangement, disposition and form of the parts without departing from the principle of the present invention as comprehended within the scope of the accompanying claims.

Having thus described the invention, what is claimed as new and desire to be secured by Letters Patent is:

1. A vacuum pump of the type described which comprises, in combination, a cooled cylindrical outer wall, at least one inner partition forming inside said wall a chamber for the upward circulation of a vaporized driving fluid, said partition being provided with passages for the outflow of said fluid, whereby the latter can flow back in the downward direction through the space between said partition and said outer wall, together with the gas to be driven by the pump, a cap at the top of said partition for closing said chamber upwardly, a second cap of a shape corresponding to the first one so as wholly to surround it, on the outside of said chamber, means carried by said outer wall for supporting said second cap at a

small distance from said first cap without contact therewith, and means for cooling said second cap.

2. A vacuum pump of the type described which comprises, in combination, a cooled cylindrical outer wall, at least one inner cylindrical partition forming inside said wall a chamber for the upward circulation of a vaporized driving fluid, said partition being provided with passages for the outflow of said fluid, whereby the latter can flow back in the downward direction through the space between said partition and said outer wall, together with the gas to be driven by the pump, a cap at the top of said partition for closing said chamber upwardly, a second cap of a shape corresponding to the first one so as wholly to surround it on the outside of said chamber, and means carried by said outer wall for supporting said second cap at a small distance from said first cap without contact therewith, said last mentioned means being made of a heat conducting material whereby said second cap is cooled by this connection with the outer wall.

3. A vacuum pump of the type described which comprises, in combination, a cooled cylindrical outer wall, at least one inner partition forming inside said wall a chamber for the upward circulation of a vaporized driving fluid, said partition being provided with passages for the outflow of said fluid, whereby the latter can flow back in the downward direction through the space between said partition and said outer wall, together

with the gas to be driven by the pump, a cap at the top of said partition for closing said chamber upwardly, and a second cap of a shape corresponding to the first one so as to surround it, located at a small distance therefrom and on the outside of said chamber, said second cap being without contact with the first one but supported by and thermally connected with said outer wall, said outer cylindrical wall body being made of two portions detachable from each other, one of said portions carrying said second cap, and the other portions carrying the other pump elements.

4. A vacuum pump according to claim 3 in which the means carried by the outer wall for supporting the second cap are constituted by metallic fins.

MAX MORAND.

REFERENCES CITED

The following references are of record in the file of this patent:

UNITED STATES PATENTS

Number	Name	Date
1,791,105	Seitz	Feb. 3, 1931
2,112,037	Malter	Mar. 22, 1938

FOREIGN PATENTS

Number	Country	Date
144,942	Switzerland	Jan. 31, 1931