(12) INTERNATIONAL APPLICATION PUBLISHED UNDER THE PATENT COOPERATION TREATY (PCT)

(19) World Intellectual Property Organization
International Bureau

(43) International Publication Date
16 July 2020 (16.07.2020)

WIPO | PCT

(10) International Publication Number
WO 2020/146775 A1

(51) International Patent Classification:
H04W 74/08 (2009.01) *H04W 74/00* (2009.01)

(21) International Application Number:
PCT/US2020/013154

(22) International Filing Date:
10 January 2020 (10.01.2020)

(25) Filing Language: English

(26) Publication Language: English

(30) Priority Data:
62/791,417 11 January 2019 (11.01.2019) US

(71) Applicant: **APPLE INC.** [US/US]; One Apple Park Way, Cupertino, CA 95014 (US).

(72) Inventors: **WEI, Lili**; c/o Apple Inc., One Apple Park Way, Cupertino, CA 95014 (US). **YING, Dawei**; c/o Apple Inc., One Apple Park Way, Cupertino, CA 95014 (US). **LI, Qian**; c/o Apple Inc., One Apple Park Way, Cupertino, CA 95014 (US). **LEE, Daewon**; c/o Apple Inc., One Apple Park Way, Cupertino, CA 95014 (US). **WU, Geng**; c/o Apple Inc., One Apple Park Way, Cupertino, CA 95014 (US).

(74) Agent: **HELVEY, Jeffrey, T.** et al.; Sterne, Kessler, Goldstein & Fox P.L.L.C, 1100 New York Avenue, NW, Washington, DC 20005 (US).

(81) Designated States *(unless otherwise indicated, for every kind of national protection available)*: AE, AG, AL, AM, AO, AT, AU, AZ, BA, BB, BG, BH, BN, BR, BW, BY, BZ, CA, CH, CL, CN, CO, CR, CU, CZ, DE, DJ, DK, DM, DO, DZ, EC, EE, EG, ES, FI, GB, GD, GE, GH, GM, GT, HN, HR, HU, ID, IL, IN, IR, IS, JO, JP, KE, KG, KH, KN, KP, KR, KW, KZ, LA, LC, LK, LR, LS, LU, LY, MA, MD, ME, MG, MK, MN, MW, MX, MY, MZ, NA, NG, NI, NO, NZ, OM, PA, PE, PG, PH, PL, PT, QA, RO, RS, RU, RW, SA, SC, SD, SE, SG, SK, SL, ST, SV, SY, TH, TJ, TM, TN, TR, TT, TZ, UA, UG, US, UZ, VC, VN, WS, ZA, ZM, ZW.

(84) Designated States *(unless otherwise indicated, for every kind of regional protection available)*: ARIPO (BW, GH, GM, KE, LR, LS, MW, MZ, NA, RW, SD, SL, ST, SZ, TZ, UG, ZM, ZW), Eurasian (AM, AZ, BY, KG, KZ, RU, TJ, TM), European (AL, AT, BE, BG, CH, CY, CZ, DE, DK, EE, ES, FI, FR, GB, GR, HR, HU, IE, IS, IT, LT, LU, LV, MC, MK, MT, NL, NO, PL, PT, RO, RS, SE, SI, SK, SM, TR), OAPI (BF, BJ, CF, CG, CI, CM, GA, GN, GQ, GW, KM, ML, MR, NE, SN, TD, TG).

(54) Title: RACH RESOURCE COORDINATION MECHANISMS FOR ADJACENT HOPS IN IAB

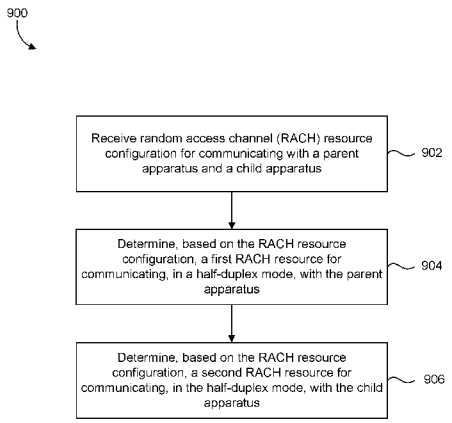

Figure 9

(57) Abstract: Systems, apparatuses, methods, and computer-readable media are provided for use in a wireless network for random access channel (RACH) resource coordination. Some embodiments are directed to an apparatus in an Integrated Access and Backhaul (IAB) network. The apparatus includes processor circuitry and radio front circuitry. The radio front end circuitry can be configured to receive random access channel (RACH) resource configuration for communicating with a parent node and a child node. The processor circuitry can be configured to determine, based on the RACH resource configuration, a first RACH resource for communicating, in a half-duplex mode, with the parent node. The processor circuitry can be further configured to determine, based on the RACH resource configuration, a second RACH resource for communicating, in the half-duplex mode, with the child node, where the second RACH resource is orthogonal to the first RACH resource.

WO 2020/146775 A1

[Continued on next page]

Published:
— *with international search report (Art. 21(3))*

RACH RESOURCE COORDINATION MECHANISMS FOR ADJACENT HOPS IN IAB

CROSS REFERENCE TO RELATED APPLICATIONS

[0001] This application claims the benefit under 35 U.S.C. § 119(e) of U.S. Provisional Application No. 62/791,417, filed January 11, 2019, which is hereby incorporated by reference in its entirety.

BACKGROUND

[0002] Various embodiments generally may relate to the field of wireless communications.

SUMMARY

[0003] Some embodiments of this disclosure include systems, apparatuses, methods, and computer-readable media for use in a wireless network for random access channel (RACH) resource coordination.

[0004] Some embodiments are directed to an apparatus in an Integrated Access and Backhaul (IAB) network. The apparatus includes processor circuitry and radio front circuitry. The radio front end circuitry can be configured to receive random access channel (RACH) resource configuration for communicating with a parent node and a child node. The processor circuitry can be configured to determine, based on the RACH resource configuration, a first RACH resource for communicating in a half-duplex mode with the parent node. The processor circuitry can be further configured to determine, based on the RACH resource configuration, a second RACH resource for communicating in the half-duplex mode with the child node, where the second RACH resource is orthogonal to the first RACH resource.

[0005] Some embodiments are directed to an apparatus in an Integrated Access and Backhaul (IAB) network. The apparatus includes a memory that stores instructions and a processor. The processor, upon executing the instructions, configured to receive random access channel (RACH) resource configuration for communicating with a parent node and a child node. The processor can be further configured to determine, based on the

RACH resource configuration, a first RACH resource for communicating in a half-duplex mode with the parent node. The processor can be also configured to determine, based on the RACH resource configuration, a second RACH resource for communicating in the half-duplex mode with the child node, where the second RACH resource is orthogonal to the first RACH resource.

[0006] Some embodiments are directed to a method including receiving, at an Integrated Access and Backhaul (IAB) network, random access channel (RACH) resource configuration for communicating with a parent node and a child node. The method can also include determining, based on the RACH resource configuration, a first RACH resource for communicating in a half-duplex mode with the parent node. The method can also include determining, based on the RACH resource configuration, a second RACH resource for communicating in the half-duplex mode with the child node, wherein the second RACH resource is orthogonal to the first RACH resource.

BRIEF DESCRIPTION OF THE DRAWINGS/FIGURES

[0007] Figure 1 depicts an example of different links for an Integrated Access and Backhaul (IAB) network, in accordance with some embodiments.

[0008] Figure 2 depicts an example Media Access Control (MAC) control element (CE) for indicating valid/invalid random access channel (RACH) resources, in accordance with some embodiments.

[0009] Figure 3 depicts architecture of a system of a network, in accordance with some embodiments.

[0010] Figure 4A depicts architecture of a system including a first core network, in accordance with some embodiments.

[0011] Figure 4B depicts architecture of a system including a second core network in accordance with some embodiments.

[0012] Figure 5A depicts an example of infrastructure equipment, in accordance with various embodiments.

[0013] Figure 5B depicts example components of a computer platform, in accordance with various embodiments.

[0014] Figure 6 depicts example components of baseband circuitry and radio frequency circuitry, in accordance with various embodiments.

[0015] Figure 7 is an illustration of various protocol functions that may be used for various protocol stacks, in accordance with various embodiments.

[0016] Figure 8 depicts a block diagram illustrating components, according to some example embodiments, able to read instructions from a machine-readable or computer-readable medium (e.g., a non-transitory machine-readable storage medium) and perform any one or more of the methodologies discussed herein.

[0017] Figure 9 depicts an example flowchart for practicing the various embodiments discussed herein, for example, for random access channel (RACH) resource coordination.

[0018] The features and advantages of the embodiments will become more apparent from the detailed description set forth below when taken in conjunction with the drawings, in which like reference characters identify corresponding elements throughout. In the drawings, like reference numbers generally indicate identical, functionally similar, and/or structurally similar elements. The drawing in which an element first appears is indicated by the leftmost digit(s) in the corresponding reference number.

DETAILED DESCRIPTION

[0019] The following detailed description refers to the accompanying drawings. The same reference numbers may be used in different drawings to identify the same or similar elements. In the following description, for purposes of explanation and not limitation, specific details are set forth such as particular structures, architectures, interfaces, techniques, etc. in order to provide a thorough understanding of the various aspects of various embodiments. However, it will be apparent to those skilled in the art having the benefit of the present disclosure that the various aspects of the various embodiments may be practiced in other examples that depart from these specific details. In certain instances, descriptions of well-known devices, circuits, and methods are omitted so as not to obscure the description of the various embodiments with unnecessary detail. For the purposes of the present document, the phrase “A or B” means (A), (B), or (A and B).

[0020] When operating in half-duplex mode, an IAB node cannot receive the physical random access channel (PRACH) from its child (a child UE or a child IAB node) and transmit PRACH to its parent node (an IAB node or IAB donor) simultaneously. However, different PRACH Configuration Index does not completely guarantee the

orthogonality of PRACH transmitting time. Hence, RACH resources for adjacent hops need to be coordinated to avoid overlapping.

[0021] In this disclosure, different mechanisms are proposed for RACH resource coordination for adjacent hops in IAB with new RACH configurations or additional indication of valid/invalid RACH resources without new RACH configurations. Several options are also provided for each mechanisms

[0022] Random access for IAB network are under study for 5G NR in 3GPP RAN1, and it will be standardized in the near future.

[0023] Figure 1 illustrates an Integrated Access and Backhaul (IAB) Network (e.g., as discussed in 3GPP TR38.874 "NR; Study on integrated access and backhaul"), where an IAB node 101 can connect to its parent node (an IAB donor or another IAB node) 103 through parent backhaul (BH) link; connect to a child user equipment (UE) 107 through child access (AC) link; and connect to its child IAB node 105 through child BH link.

[0024] When operating in half-duplex mode, an IAB node cannot receive the physical random access channel (PRACH) from its child (a child UE or a child IAB node) and transmit PRACH to its parent node (an IAB node or IAB donor) simultaneously. Hence, RACH resources for adjacent hops need to be coordinated to avoid this kind of collision.

[0025] In current NR specifications, random access configuration determines the PRACH preamble format and the transmitting timing. For example, TS38.211 Table 6.3.3.2-2 (3GPP TS38.211 "NR; Physical channels and modulation") lists 256 NR RACH configuration (sorted by PRACH Configuration Index) for FR1 (frequency range 1) and paired spectrum, Table 6.3.3.2-3 for FR1 & time division multiplexing (TDD) and Table 6.3.3.2-4 for FR2 & TDD. However, different PRACH Configuration Index does not completely guarantee the orthogonality of PRACH transmitting time.

[0026] For example, PRACH Configuration Index#0 and #4 are listed in Table 1 from TS38.211 Table 6.3.3.2-2 as a comparison example. For PRACH Configuration Index #0, it allows PRACH preamble format 0 transmission with the radio frame number satisfying n_SFN mod 16 = 1, which means PRACH preamble format 0 is allowed to be transmitted at SFN = 1,17,33,… with subframe number 1. For PRACH Configuration Index #4, it allows PRACH preamble format 0 transmission with the radio frame number satisfying n_SFN mod 8 = 1, which means PRACH preamble format 0 is allowed to be transmitted at SFN = 1,9,17,25,33,… with subframe number 1. It can be seen that if an IAB node and

its child node are applying those two random access configurations, there is still a chance that those two configurations will require the IAB node to listen and transmit at the same time, if both PRACH preambles are transmitted at SFN = 1 or 17 or 33, etc.

Table 1 Random Access Configuration 0 and 4 from TS38.211 Table 6.3.3.2-2

PRACH Configuration Index	Preamble Format	n_SFN mod x = y		Subframe number	Starting Symbol
		x	y		
0	0	16	1	1	0
4	0	8	1	1	0

[0027] As different PRACH Configuration Index does not completely guarantee the orthogonality of PRACH transmitting time, RACH coordination mechanisms are needed for adjacent hops to avoid overlapping RACH resources in IAB.

RACH Resource Coordination Mechanisms for Adjacent Hops in IAB

[0028] There can be different mechanism for RACH resource coordination for adjacent hops in IAB.

Mechanism 1: Create new RACH configurations.

[0029] In this mechanism, new RACH configurations (orthogonal to current RACH configurations or orthogonal to a subset of current RACH configurations) need to be added. There are two options in this mechanism.

- Option 1-1: Add new entries in current RACH configuration tables

[0030] In Option 1-1, new entries of RACH configurations are added to current RACH configuration Tables (TS38.211 Table 6.3.3.2-2/Table 6.3.3.2-3/Table 6.3.3.2-4) to create more orthogonal RACH configurations. IAB network will coordinate/configure the adjacent hops with orthogonal RACH configurations.

- Option 1-2: Create new RACH configuration tables.

[0031] In Option 1-2, new RACH configuration Tables can be created and the new RACH configuration tables are orthogonal to previous RACH configuration Tables in current specifications. IAB network will coordinate/configure the adjacent hops from the orthogonal tables.

Mechanism 2: Add additional indication for valid/invalid RACH resources with current RACH configurations.

[0032] In this mechanism, no new RACH configurations are created, but additional indication will be added to coordinate when there are overlapped RACH resources for adjacent hops. There are several options for this mechanism.

- Option 2-1: Implicit indication for an IAB node to coordinate for parent backhaul and child links.

[0033] For an IAB node with child links (either child backhaul or child access links), the IAB node is configured with the RACH configuration for its parent backhaul link and RACH configuration for its child links. For Option 2-1, as long as the child link RACH resources are a subset of the parent backhaul link RACH resources, the IAB node can choose not to use the RACH resources that are overlapping with RACH resources of child links in the parent backhaul link. As the IAB node knows the child link RACH resource configuration, no additional signaling is needed. This Option only works for child links RACH resources are a subset of parent RACH resources.

[0034] For example, considering the pervious example of PRACH Configuration Index#0 and #4 in Table 1 from TS38.211 Table 6.3.3.2-2. PRACH Configuration Index #0 means PRACH preamble format 0 is allowed to be transmitted at SFN = 1,17,33,… with subframe number 1; while PRACH Configuration Index #4 means PRACH preamble format 0 is allowed to be transmitted at SFN = 1,9,17,25,33,… with subframe number 1. PRACH Configuration Index#0 resources are a subset of PRACH Configuration Index#4 resources. When PRACH Configuration Index#4 is configured for the parent backhaul link of an IAB node and PRACH Configuration Index#0 is configured for the child link of the IAB node, the IAB node can coordinate its own RACH resources for parent backhaul link according to those configurations: exclude SFN=1,17,33,… transmission, only transmit PRACH preamble format 0 at SFN = 9,25,41,…

- Option 2-2: Explicit indication for valid/invalid RACH resources via SIB1.

[0035] In current NR specifications, cell-specific random access resource configuration parameter *rach-ConfigCommon* in the primary cell (PCell) is configured in RRC IE *BWP-UplinkCommon* and signaled in RMSI (SIB1) (e.g., 3GPP TS38.211 “NR; Physical channels and modulation” and/or 3GPP TS38.331, “NR: RRC Protocol specification”). When adjacent hops are configured with overlapped RACH resources, explicit indication for valid or invalid RACH resources can be additionally signaled via SIB1.

[0036] In one embodiment of this Option 2-2 for valid RACH resources indication, a new field *rach-ConfigCommonValid* can be added in RRC IE *BWP-UplinkCommon:*

- *rach-ConfigCommonValid*: Indication of valid RACH resources among rach-ConfigCommon RACH resources.

```
BWP-UplinkCommon ::=          SEQUENCE {
    genericParameters         BWP,
    rach-ConfigCommon         SetupRelease { RACH-ConfigCommon}          OPTIONAL,
    rach-ConfigCommonValid    SetupRelease { RACH-ConfigCommonValid }    OPTIONAL,
    pusch-ConfigCommon        SetupRelease { PUSCH-ConfigCommon}         OPTIONAL,
    pucch-ConfigCommon        SetupRelease { PUCCH-ConfigCommon}         OPTIONAL,
    ...
}
```

Field description:

Rach-ConfigCommonValid
Indication of valid RACH resources among rach-ConfigCommon RACH resources.

[0037] The new RRC IE *RACH-ConfigCommonValid* is added to indicate invalid radio frame number satisfying n_SFN mod x = y, subframe number indication bit-stream, and/or PRACH occasions indication bit-stream within a PRACH slot. One embodiment of this new RRC IE *RACH-ConfigCommonValid* is listed as below.

```
RACH-ConfigCommonValid ::=          SEQUENCE {
    SFN-x                        INTEGER (1..16)                          OPTIONAL,
    SFN-y                     INTEGER (0..15)                          OPTIONAL,
    NumOfSubframe              BIT STRING(SIZE(10))                      OPTIONAL,
    PRACH-Occasions            BIT STRING(SIZE(7))                      OPTIONAL,
    ...
```

Field description:

SFN-x
The x value for valid RACH resources satisfying n_SFN mod x=y.
SFN-y
The y value for valid RACH resources satisfying n_SFN mod x=y.
NumofSubframe
A bit stream to indicate which subframe numbers (#0 to #9) are valid.
PRACH-Occasions
A bit stream to indicate which PRACH occasions (maximum 7 PRACH occasions) within a PRACH slot are valid.

[0038] In another embodiment of this Option 2-2 for invalid RACH resource indication, a new field rach-ConfigCommonInvalid can be added in RRC IE BWP-UplinkCommon:

- rach-ConfigCommonInvalid: Indication of invalid RACH resources among rach-ConfigCommon RACH resources.

```
WP-UplinkCommon ::=          SEQUENCE {
    genericParameters         BWP,
    rach-ConfigCommon         SetupRelease { RACH-ConfigCommon}          OPTIONAL,
    rach-ConfigCommonInvalid  SetupRelease { RACH-ConfigCommonInvalid}   OPTIONAL,
    pusch-ConfigCommon        SetupRelease { PUSCH-ConfigCommon}         OPTIONAL,
    pucch-ConfigCommon        SetupRelease { PUCCH-ConfigCommon}         OPTIONAL,
    ...
}
```

Field description:

Rach-ConfigCommonInvalid   Indication of invalid RACH resources among rach-ConfigCommon RACH resources.

[0039] The new RRC IE RACH-ConfigCommonInvalid is added to indicate invalid radio frame number satisfying n_SFN mod x = y, subframe number indication bit-stream, and/or PRACH occasions indication bit-stream within a PRACH slot. One embodiment of this new RRC IE RACH-ConfigCommonInvalid is listed as below.

```
RACH-ConfigCommonInvalid ::=          SEQUENCE {
    SFN-x                        INTEGER (1..16)                        OPTIONAL,
    SFN-y                    INTEGER (0..15)                        OPTIONAL,
    NumOfSubfrmae             BIT STRING(SIZE(10))                      OPTIONAL,
    PRACH-Occasions           BIT STRING(SIZE(7))                     OPTIONAL,
    ...
}
```

Field description:

SFN-x   The x value for invalid RACH resources satisfying n_SFN mod x=y.
SFN-y   The y value for invalid RACH resources satisfying n_SFN mod x=y.
NumofSubframe   A bit stream to indicate which subframe numbers (#0 to #9) are invalid.
PRACH-Occasions   A bit stream to indicate which PRACH occasions (maximum 7 PRACH occasions) within a PRACH slot are invalid.

[0040] Other embodiments to add valid/invalid RACH resource indication to RRC IE *RACH-ConfigCommon* or RRC IE *RACH-ConfigGeneric* can be derived similarly.

- Option 2-3: Explicit indication for valid/invalid RACH resources via dedicated RRC signaling.

[0041] In this Option 2-3, the explicit indication for valid/invalid RACH resources is signaled via dedicated RRC signaling. Similar new fields and new IEs as Option 2-2 can be added to a current RRC message or a new RRC message.

- Option 2-4: Explicit indication for valid/invalid RACH resources via GC-PDCCH.

[0042] In this Option 2-4, the explicit indication for valid/invalid RACH resources is signaled through parent node via group-common physical downlink control channel (GC-PDCCH).

[0043] The indication information can be added to a current DCI format or a new type of DCI format.

- Option 2-5: Explicit indication for valid/invalid RACH resources via MAC-CE.

[0044] In this Option 2-5, the explicit indication for valid/invalid RACH resources can be signaled through parent node via MAC CE.

[0045] In one embodiment, the explicit indication for valid RACH resources is conveyed in a new MAC CE using 10110 as LCID for DL-SCH. The new MAC CE, for example as illustrated in Figure 2, contains multiple octets. Among them, four bits can be used to indicate the x value and another four bits to indicate the y value for RACH resources with radio frame number satisfying n_SFN mod x=y; four bits to be used indicate to indicate which subframe number (#0 to #9) are valid; three bits to indicate which PRACH occasions (maximum 7 PRACH occasions) within a PRACH slot are valid.

Systems and Implementations

[0046] Figure 3 illustrates an example architecture of a system 300 of a network, in accordance with various embodiments. The following description is provided for an example system 300 that operates in conjunction with the LTE system standards and 5G or NR system standards as provided by 3GPP technical specifications. However, the example embodiments are not limited in this regard and the described embodiments may apply to other networks that benefit from the principles described herein, such as future 3GPP systems (e.g., Sixth Generation (6G)) systems, IEEE 802.16 protocols (e.g., WMAN, WiMAX, etc.), or the like.

[0047] As shown by Figure 3, the system 300 includes UE 301a and UE 301b (collectively referred to as “UEs 301” or “UE 301”). In this example, UEs 301 are illustrated as smartphones (e.g., handheld touchscreen mobile computing devices connectable to one or more cellular networks), but may also comprise any mobile or non-mobile computing device, such as consumer electronics devices, cellular phones, smartphones, feature phones, tablet computers, wearable computer devices, personal digital assistants (PDAs), pagers, wireless handsets, desktop computers, laptop computers, in-vehicle infotainment (IVI), in-car entertainment (ICE) devices, an Instrument Cluster (IC), head-up display (HUD) devices, onboard diagnostic (OBD) devices, dashtop mobile equipment (DME), mobile data terminals (MDTs), Electronic Engine Management System (EEMS), electronic/engine control units (ECUs), electronic/engine control modules (ECMs), embedded systems, microcontrollers, control modules, engine management systems (EMS), networked or “smart” appliances, MTC devices, M2M, IoT devices, and/or the like.

[0048] In some embodiments, any of the UEs 301 may be IoT UEs, which may comprise a network access layer designed for low-power IoT applications utilizing short-lived UE connections. An IoT UE can utilize technologies such as M2M or MTC for exchanging data with an MTC server or device via a PLMN, ProSe or D2D communication, sensor networks, or IoT networks. The M2M or MTC exchange of data may be a machine-initiated exchange of data. An IoT network describes interconnecting IoT UEs, which may include uniquely identifiable embedded computing devices (within the Internet infrastructure), with short-lived connections. The IoT UEs may execute background applications (e.g., keep-alive messages, status updates, etc.) to facilitate the connections of the IoT network.

[0049] The UEs 301 may be configured to connect, for example, communicatively couple, with an or RAN 310. In embodiments, the RAN 310 may be an NG RAN or a 5G RAN, an E-UTRAN, or a legacy RAN, such as a UTRAN or GERAN. As used herein, the term "NG RAN" or the like may refer to a RAN 310 that operates in an NR or 5G system 300, and the term "E-UTRAN" or the like may refer to a RAN 310 that operates in an LTE or 4G system 300. The UEs 301 utilize connections (or channels) 303 and 304, respectively, each of which comprises a physical communications interface or layer (discussed in further detail below).

[0050] In this example, the connections 303 and 304 are illustrated as an air interface to enable communicative coupling, and can be consistent with cellular communications protocols, such as a GSM protocol, a CDMA network protocol, a PTT protocol, a POC protocol, a UMTS protocol, a 3GPP LTE protocol, a 5G protocol, a NR protocol, and/or any of the other communications protocols discussed herein. In embodiments, the UEs 301 may directly exchange communication data via a ProSe interface 305. The ProSe interface 305 may alternatively be referred to as a SL interface 305 and may comprise one or more logical channels, including but not limited to a PSCCH, a PSSCH, a PSDCH, and a PSBCH.

[0051] The UE 301b is shown to be configured to access an AP 306 (also referred to as "WLAN node 306," "WLAN 306," "WLAN Termination 306," "WT 306" or the like) via connection 307. The connection 307 can comprise a local wireless connection, such as a connection consistent with any IEEE 802.11 protocol, wherein the AP 306 would comprise a wireless fidelity (Wi-Fi®) router. In this example, the AP 306 is shown to be

connected to the Internet without connecting to the core network of the wireless system (described in further detail below). In various embodiments, the UE 301b, RAN 310, and AP 306 may be configured to utilize LWA operation and/or LWIP operation. The LWA operation may involve the UE 301b in RRC_CONNECTED being configured by a RAN node 311a-b to utilize radio resources of LTE and WLAN. LWIP operation may involve the UE 301b using WLAN radio resources (e.g., connection 307) via IPsec protocol tunneling to authenticate and encrypt packets (e.g., IP packets) sent over the connection 307. IPsec tunneling may include encapsulating the entirety of original IP packets and adding a new packet header, thereby protecting the original header of the IP packets.

[0052] The RAN 310 can include one or more AN nodes or RAN nodes 311a and 311b (collectively referred to as "RAN nodes 311" or "RAN node 311") that enable the connections 303 and 304. As used herein, the terms "access node," "access point," or the like may describe equipment that provides the radio baseband functions for data and/or voice connectivity between a network and one or more users. These access nodes can be referred to as BS, gNBs, RAN nodes, eNBs, NodeBs, RSUs, TRxPs or TRPs, and so forth, and can comprise ground stations (e.g., terrestrial access points) or satellite stations providing coverage within a geographic area (e.g., a cell). As used herein, the term "NG RAN node" or the like may refer to a RAN node 311 that operates in an NR or 5G system 300 (for example, a gNB), and the term "E-UTRAN node" or the like may refer to a RAN node 311 that operates in an LTE or 4G system 300 (e.g., an eNB). According to various embodiments, the RAN nodes 311 may be implemented as one or more of a dedicated physical device such as a macrocell base station, and/or a low power (LP) base station for providing femtocells, picocells or other like cells having smaller coverage areas, smaller user capacity, or higher bandwidth compared to macrocells.

[0053] In some embodiments, all or parts of the RAN nodes 311 may be implemented as one or more software entities running on server computers as part of a virtual network, which may be referred to as a CRAN and/or a virtual baseband unit pool (vBBUP). In these embodiments, the CRAN or vBBUP may implement a RAN function split, such as a PDCP split wherein RRC and PDCP layers are operated by the CRAN/vBBUP and other L2 protocol entities are operated by individual RAN nodes 311; a MAC/PHY split wherein RRC, PDCP, RLC, and MAC layers are operated by the CRAN/vBBUP and the PHY layer is operated by individual RAN nodes 311; or a "lower PHY" split wherein

RRC, PDCP, RLC, MAC layers and upper portions of the PHY layer are operated by the CRAN/vBBUP and lower portions of the PHY layer are operated by individual RAN nodes 311. This virtualized framework allows the freed-up processor cores of the RAN nodes 311 to perform other virtualized applications. In some implementations, an individual RAN node 311 may represent individual gNB-DUs that are connected to a gNB-CU via individual F1 interfaces (not shown by Figure 3). In these implementations, the gNB-DUs may include one or more remote radio heads or RFEMs (see, e.g., Figure 5), and the gNB-CU may be operated by a server that is located in the RAN 310 (not shown) or by a server pool in a similar manner as the CRAN/vBBUP. Additionally or alternatively, one or more of the RAN nodes 311 may be next generation eNBs (ng-eNBs), which are RAN nodes that provide E-UTRA user plane and control plane protocol terminations toward the UEs 301, and are connected to a 5GC (e.g., CN 440 of Figure 4B) via an NG interface (discussed infra).

[0054] In V2X scenarios one or more of the RAN nodes 311 may be or act as RSUs. The term "Road Side Unit" or "RSU" may refer to any transportation infrastructure entity used for V2X communications. An RSU may be implemented in or by a suitable RAN node or a stationary (or relatively stationary) UE, where an RSU implemented in or by a UE may be referred to as a "UE-type RSU," an RSU implemented in or by an eNB may be referred to as an "eNB-type RSU," an RSU implemented in or by a gNB may be referred to as a "gNB-type RSU," and the like. In one example, an RSU is a computing device coupled with radio frequency circuitry located on a roadside that provides connectivity support to passing vehicle UEs 301 (vUEs 301). The RSU may also include internal data storage circuitry to store intersection map geometry, traffic statistics, media, as well as applications/software to sense and control ongoing vehicular and pedestrian traffic. The RSU may operate on the 5.9 GHz Direct Short Range Communications (DSRC) band to provide very low latency communications required for high speed events, such as crash avoidance, traffic warnings, and the like. Additionally or alternatively, the RSU may operate on the cellular V2X band to provide the aforementioned low latency communications, as well as other cellular communications services. Additionally or alternatively, the RSU may operate as a Wi-Fi hotspot (2.4 GHz band) and/or provide connectivity to one or more cellular networks to provide uplink and downlink communications. The computing device(s) and some or all of the

radiofrequency circuitry of the RSU may be packaged in a weatherproof enclosure suitable for outdoor installation, and may include a network interface controller to provide a wired connection (e.g., Ethernet) to a traffic signal controller and/or a backhaul network.

[0055] Any of the RAN nodes 311 can terminate the air interface protocol and can be the first point of contact for the UEs 301. In some embodiments, any of the RAN nodes 311 can fulfill various logical functions for the RAN 310 including, but not limited to, radio network controller (RNC) functions such as radio bearer management, uplink and downlink dynamic radio resource management and data packet scheduling, and mobility management.

[0056] In embodiments, the UEs 301 can be configured to communicate using OFDM communication signals with each other or with any of the RAN nodes 311 over a multicarrier communication channel in accordance with various communication techniques, such as, but not limited to, an OFDMA communication technique (e.g., for downlink communications) or a SC-FDMA communication technique (e.g., for uplink and ProSe or sidelink communications), although the scope of the embodiments is not limited in this respect. The OFDM signals can comprise a plurality of orthogonal subcarriers.

[0057] In some embodiments, a downlink resource grid can be used for downlink transmissions from any of the RAN nodes 311 to the UEs 301, while uplink transmissions can utilize similar techniques. The grid can be a time-frequency grid, called a resource grid or time-frequency resource grid, which is the physical resource in the downlink in each slot. Such a time-frequency plane representation is a common practice for OFDM systems, which makes it intuitive for radio resource allocation. Each column and each row of the resource grid corresponds to one OFDM symbol and one OFDM subcarrier, respectively. The duration of the resource grid in the time domain corresponds to one slot in a radio frame. The smallest time-frequency unit in a resource grid is denoted as a resource element. Each resource grid comprises a number of resource blocks, which describe the mapping of certain physical channels to resource elements. Each resource block comprises a collection of resource elements; in the frequency domain, this may represent the smallest quantity of resources that currently can be allocated. There are

several different physical downlink channels that are conveyed using such resource blocks.

[0058] According to various embodiments, the UEs 301a, 301b and the RAN nodes 311a, 311b communicate data (for example, transmit and receive) data over a licensed medium (also referred to as the "licensed spectrum" and/or the "licensed band") and an unlicensed shared medium (also referred to as the "unlicensed spectrum" and/or the "unlicensed band"). The licensed spectrum may include channels that operate in the frequency range of approximately 400 MHz to approximately 3.8 GHz, whereas the unlicensed spectrum may include the 5 GHz band.

[0059] To operate in the unlicensed spectrum, the UEs 301a, 301b and the RAN nodes 311a, 311b may operate using LAA, eLAA, and/or feLAA mechanisms. In these implementations, the UEs 301, 301b and the RAN nodes 311a, 311b may perform one or more known medium-sensing operations and/or carrier-sensing operations in order to determine whether one or more channels in the unlicensed spectrum is unavailable or otherwise occupied prior to transmitting in the unlicensed spectrum. The medium/carrier sensing operations may be performed according to a listen-before-talk (LBT) protocol.

[0060] LBT is a mechanism whereby equipment (for example, UEs 301a, 301b, RAN nodes 311a, 311b, etc.) senses a medium (for example, a channel or carrier frequency) and transmits when the medium is sensed to be idle (or when a specific channel in the medium is sensed to be unoccupied). The medium sensing operation may include CCA, which utilizes at least ED to determine the presence or absence of other signals on a channel in order to determine if a channel is occupied or clear. This LBT mechanism allows cellular/LAA networks to coexist with incumbent systems in the unlicensed spectrum and with other LAA networks. ED may include sensing RF energy across an intended transmission band for a period of time and comparing the sensed RF energy to a predefined or configured threshold.

[0061] Typically, the incumbent systems in the 5 GHz band are WLANs based on IEEE 802.11 technologies. WLAN employs a contention-based channel access mechanism, called CSMA/CA. Here, when a WLAN node (e.g., a mobile station (MS) such as UE 301a or 301b, AP 306, or the like) intends to transmit, the WLAN node may first perform CCA before transmission. Additionally, a backoff mechanism is used to avoid collisions in situations where more than one WLAN node senses the channel as idle and transmits at

the same time. The backoff mechanism may be a counter that is drawn randomly within the CWS, which is increased exponentially upon the occurrence of collision and reset to a minimum value when the transmission succeeds. The LBT mechanism designed for LAA is somewhat similar to the CSMA/CA of WLAN. In some implementations, the LBT procedure for DL or UL transmission bursts including PDSCH or PUSCH transmissions, respectively, may have an LAA contention window that is variable in length between X and Y ECCA slots, where X and Y are minimum and maximum values for the CWSs for LAA. In one example, the minimum CWS for an LAA transmission may be 9 microseconds (μs); however, the size of the CWS and a MCOT (for example, a transmission burst) may be based on governmental regulatory requirements.

[0062] The LAA mechanisms are built upon CA technologies of LTE-Advanced systems. In CA, each aggregated carrier is referred to as a CC. A CC may have a bandwidth of 1.4, 3, 5, 10, 15 or 20 MHz and a maximum of five CCs can be aggregated, and therefore, a maximum aggregated bandwidth is 100 MHz. In FDD systems, the number of aggregated carriers can be different for DL and UL, where the number of UL CCs is equal to or lower than the number of DL component carriers. In some cases, individual CCs can have a different bandwidth than other CCs. In TDD systems, the number of CCs as well as the bandwidths of each CC is usually the same for DL and UL.

[0063] CA also comprises individual serving cells to provide individual CCs. The coverage of the serving cells may differ, for example, because CCs on different frequency bands will experience different pathloss. A primary service cell or PCell may provide a PCC for both UL and DL, and may handle RRC and NAS related activities. The other serving cells are referred to as SCells, and each SCell may provide an individual SCC for both UL and DL. The SCCs may be added and removed as required, while changing the PCC may require the UE 301a, 301b to undergo a handover. In LAA, eLAA, and feLAA, some or all of the SCells may operate in the unlicensed spectrum (referred to as “LAA SCells”), and the LAA SCells are assisted by a PCell operating in the licensed spectrum. When a UE is configured with more than one LAA SCell, the UE may receive UL grants on the configured LAA SCells indicating different PUSCH starting positions within a same subframe.

[0064] The PDSCH carries user data and higher-layer signaling to the UEs 301. The PDCCH carries information about the transport format and resource allocations related to

the PDSCH channel, among other things. It may also inform the UEs 301 about the transport format, resource allocation, and HARQ information related to the uplink shared channel. Typically, downlink scheduling (assigning control and shared channel resource blocks to the UE 301b within a cell) may be performed at any of the RAN nodes 311 based on channel quality information fed back from any of the UEs 301. The downlink resource assignment information may be sent on the PDCCH used for (e.g., assigned to) each of the UEs 301.

[0065] The PDCCH uses CCEs to convey the control information. Before being mapped to resource elements, the PDCCH complex-valued symbols may first be organized into quadruplets, which may then be permuted using a sub-block interleaver for rate matching. Each PDCCH may be transmitted using one or more of these CCEs, where each CCE may correspond to nine sets of four physical resource elements known as REGs. Four Quadrature Phase Shift Keying (QPSK) symbols may be mapped to each REG. The PDCCH can be transmitted using one or more CCEs, depending on the size of the DCI and the channel condition. There can be four or more different PDCCH formats defined in LTE with different numbers of CCEs (e.g., aggregation level, L=1, 2, 4, or 8).

[0066] Some embodiments may use concepts for resource allocation for control channel information that are an extension of the above-described concepts. For example, some embodiments may utilize an EPDCCH that uses PDSCH resources for control information transmission. The EPDCCH may be transmitted using one or more ECCEs. Similar to above, each ECCE may correspond to nine sets of four physical resource elements known as an EREGs. An ECCE may have other numbers of EREGs in some situations.

[0067] The RAN nodes 311 may be configured to communicate with one another via interface 312. In embodiments where the system 300 is an LTE system (e.g., when CN 320 is an EPC 420 as in Figure 4A), the interface 312 may be an X2 interface 312. The X2 interface may be defined between two or more RAN nodes 311 (e.g., two or more eNBs and the like) that connect to EPC 320, and/or between two eNBs connecting to EPC 320. In some implementations, the X2 interface may include an X2 user plane interface (X2-U) and an X2 control plane interface (X2-C). The X2-U may provide flow control mechanisms for user data packets transferred over the X2 interface, and may be used to communicate information about the delivery of user data between eNBs. For example, the

X2-U may provide specific sequence number information for user data transferred from a MeNB to an SeNB; information about successful in sequence delivery of PDCP PDUs to a UE 301 from an SeNB for user data; information of PDCP PDUs that were not delivered to a UE 301; information about a current minimum desired buffer size at the SeNB for transmitting to the UE user data; and the like. The X2-C may provide intra-LTE access mobility functionality, including context transfers from source to target eNBs, user plane transport control, etc.; load management functionality; as well as inter-cell interference coordination functionality.

[0068] In embodiments where the system 300 is a 5G or NR system (e.g., when CN 320 is an 5GC 440 as in Figure 4B), the interface 312 may be an Xn interface 312. The Xn interface is defined between two or more RAN nodes 311 (e.g., two or more gNBs and the like) that connect to 5GC 320, between a RAN node 311 (e.g., a gNB) connecting to 5GC 320 and an eNB, and/or between two eNBs connecting to 5GC 320. In some implementations, the Xn interface may include an Xn user plane (Xn-U) interface and an Xn control plane (Xn-C) interface. The Xn-U may provide non-guaranteed delivery of user plane PDUs and support/provide data forwarding and flow control functionality. The Xn-C may provide management and error handling functionality, functionality to manage the Xn-C interface; mobility support for UE 301 in a connected mode (e.g., CM-CONNECTED) including functionality to manage the UE mobility for connected mode between one or more RAN nodes 311. The mobility support may include context transfer from an old (source) serving RAN node 311 to new (target) serving RAN node 311; and control of user plane tunnels between old (source) serving RAN node 311 to new (target) serving RAN node 311. A protocol stack of the Xn-U may include a transport network layer built on Internet Protocol (IP) transport layer, and a GTP-U layer on top of a UDP and/or IP layer(s) to carry user plane PDUs. The Xn-C protocol stack may include an application layer signaling protocol (referred to as Xn Application Protocol (Xn-AP)) and a transport network layer that is built on SCTP. The SCTP may be on top of an IP layer, and may provide the guaranteed delivery of application layer messages. In the transport IP layer, point-to-point transmission is used to deliver the signaling PDUs. In other implementations, the Xn-U protocol stack and/or the Xn-C protocol stack may be same or similar to the user plane and/or control plane protocol stack(s) shown and described herein.

[0069] The RAN 310 is shown to be communicatively coupled to a core network—in this embodiment, core network (CN) 320. The CN 320 may comprise a plurality of network elements 322, which are configured to offer various data and telecommunications services to customers/subscribers (e.g., users of UEs 301) who are connected to the CN 320 via the RAN 310. The components of the CN 320 may be implemented in one physical node or separate physical nodes including components to read and execute instructions from a machine-readable or computer-readable medium (e.g., a non-transitory machine-readable storage medium). In some embodiments, NFV may be utilized to virtualize any or all of the above-described network node functions via executable instructions stored in one or more computer-readable storage mediums (described in further detail below). A logical instantiation of the CN 320 may be referred to as a network slice, and a logical instantiation of a portion of the CN 320 may be referred to as a network sub-slice. NFV architectures and infrastructures may be used to virtualize one or more network functions, alternatively performed by proprietary hardware, onto physical resources comprising a combination of industry-standard server hardware, storage hardware, or switches. In other words, NFV systems can be used to execute virtual or reconfigurable implementations of one or more EPC components/functions.

[0070] Generally, the application server 330 may be an element offering applications that use IP bearer resources with the core network (e.g., UMTS PS domain, LTE PS data services, etc.). The application server 330 can also be configured to support one or more communication services (e.g., VoIP sessions, PTT sessions, group communication sessions, social networking services, etc.) for the UEs 301 via the EPC 320.

[0071] In embodiments, the CN 320 may be a 5GC (referred to as "5GC 320" or the like), and the RAN 310 may be connected with the CN 320 via an NG interface 313. In embodiments, the NG interface 313 may be split into two parts, an NG user plane (NG-U) interface 314, which carries traffic data between the RAN nodes 311 and a UPF, and the S1 control plane (NG-C) interface 315, which is a signaling interface between the RAN nodes 311 and AMFs. Embodiments where the CN 320 is a 5GC 320 are discussed in more detail with regard to Figure 4B.

[0072] In embodiments, the CN 320 may be a 5G CN (referred to as "5GC 320" or the like), while in other embodiments, the CN 320 may be an EPC). Where CN 320 is an EPC (referred to as "EPC 320" or the like), the RAN 310 may be connected with the CN

320 via an S1 interface 313. In embodiments, the S1 interface 313 may be split into two parts, an S1 user plane (S1-U) interface 314, which carries traffic data between the RAN nodes 311 and the S-GW, and the S1-MME interface 315, which is a signaling interface between the RAN nodes 311 and MMEs. An example architecture wherein the CN 320 is an EPC 320 is shown by Figure 4A.

[0073] Figure 4A illustrates an example architecture of a system 400 including a first CN 420, in accordance with various embodiments. In this example, system 400 may implement the LTE standard wherein the CN 420 is an EPC 420 that corresponds with CN 320 of Figure 3. Additionally, the UE 401 may be the same or similar as the UEs 301 of Figure 3, and the E-UTRAN 410 may be a RAN that is the same or similar to the RAN 310 of Figure 3, and which may include RAN nodes 311 discussed previously. The CN 420 may comprise MMEs 411, an S-GW 417, a P-GW 418, a HSS 419, and a SGSN 416.

[0074] The MMEs 411 may be similar in function to the control plane of legacy SGSN, and may implement MM functions to keep track of the current location of a UE 401. The MMEs 411 may perform various MM procedures to manage mobility aspects in access such as gateway selection and tracking area list management. MM (also referred to as "EPS MM" or "EMM" in E-UTRAN systems) may refer to all applicable procedures, methods, data storage, etc. that are used to maintain knowledge about a present location of the UE 401, provide user identity confidentiality, and/or perform other like services to users/subscribers. Each UE 401 and the MME 411 may include an MM or EMM sublayer, and an MM context may be established in the UE 401 and the MME 411 when an attach procedure is successfully completed. The MM context may be a data structure or database object that stores MM-related information of the UE 401. The MMEs 411 may be coupled with the HSS 419 via an S6a reference point, coupled with the SGSN 416 via an S3 reference point, and coupled with the S-GW 417 via an S11 reference point.

[0075] The SGSN 416 may be a node that serves the UE 401 by tracking the location of an individual UE 401 and performing security functions. In addition, the SGSN 416 may perform Inter-EPC node signaling for mobility between 2G/3G and E-UTRAN 3GPP access networks; PDN and S-GW selection as specified by the MMEs 411; handling of UE 401 time zone functions as specified by the MMEs 411; and MME selection for handovers to E-UTRAN 3GPP access network. The S3 reference point between the

MMEs 411 and the SGSN 416 may enable user and bearer information exchange for inter-3GPP access network mobility in idle and/or active states.

[0076] The HSS 419 may comprise a database for network users, including subscription-related information to support the network entities' handling of communication sessions. The EPC 420 may comprise one or several HSSs 419, depending on the number of mobile subscribers, on the capacity of the equipment, on the organization of the network, etc. For example, the HSS 419 can provide support for routing/roaming, authentication, authorization, naming/addressing resolution, location dependencies, etc. An S6a reference point between the HSS 419 and the MMEs 411 may enable transfer of subscription and authentication data for authenticating/authorizing user access to the EPC 420 between HSS 419 and the MMEs 411.

[0077] The S-GW 417 may terminate the S1 interface 313 ("S1-U" in Figure 4A) toward the RAN 410, and routes data packets between the RAN 410 and the EPC 420. In addition, the S-GW 417 may be a local mobility anchor point for inter-RAN node handovers and also may provide an anchor for inter-3GPP mobility. Other responsibilities may include lawful intercept, charging, and some policy enforcement. The S11 reference point between the S-GW 417 and the MMEs 411 may provide a control plane between the MMEs 411 and the S-GW 417. The S-GW 417 may be coupled with the P-GW 418 via an S5 reference point.

[0078] The P-GW 418 may terminate an SGi interface toward a PDN 430. The P-GW 418 may route data packets between the EPC 420 and external networks such as a network including the application server 330 (alternatively referred to as an "AF") via an IP interface 325 (see e.g., Figure 3). In embodiments, the P-GW 418 may be communicatively coupled to an application server (application server 330 of Figure 3 or PDN 430 in Figure 4A) via an IP communications interface 325 (see, e.g., Figure 3). The S5 reference point between the P-GW 418 and the S-GW 417 may provide user plane tunneling and tunnel management between the P-GW 418 and the S-GW 417. The S5 reference point may also be used for S-GW 417 relocation due to UE 401 mobility and if the S-GW 417 needs to connect to a non-collocated P-GW 418 for the required PDN connectivity. The P-GW 418 may further include a node for policy enforcement and charging data collection (e.g., PCEF (not shown)). Additionally, the SGi reference point between the P-GW 418 and the packet data network (PDN) 430 may be an operator

external public, a private PDN, or an intra operator packet data network, for example, for provision of IMS services. The P-GW 418 may be coupled with a PCRF 436 via a Gx reference point.

[0079] PCRF 436 is the policy and charging control element of the EPC 420. In a non-roaming scenario, there may be a single PCRF 436 in the Home Public Land Mobile Network (HPLMN) associated with a UE 401's Internet Protocol Connectivity Access Network (IP-CAN) session. In a roaming scenario with local breakout of traffic, there may be two PCRFs associated with a UE 401's IP-CAN session, a Home PCRF (H-PCRF) within an HPLMN and a Visited PCRF (V-PCRF) within a Visited Public Land Mobile Network (VPLMN). The PCRF 436 may be communicatively coupled to the application server 430 via the P-GW 418. The application server 430 may signal the PCRF 436 to indicate a new service flow and select the appropriate QoS and charging parameters. The PCRF 436 may provision this rule into a PCEF (not shown) with the appropriate TFT and QCI, which commences the QoS and charging as specified by the application server 430. The Gx reference point between the PCRF 436 and the P-GW 418 may allow for the transfer of QoS policy and charging rules from the PCRF 436 to PCEF in the P-GW 418. An Rx reference point may reside between the PDN 430 (or "AF 430") and the PCRF 436.

[0080] Figure 4B illustrates an architecture of a system 401 including a second CN 440 in accordance with various embodiments. The system 401 is shown to include a UE 401, which may be the same or similar to the UEs 301 and UE 401 discussed previously; a (R)AN 410, which may be the same or similar to the RAN 310 and RAN 410 discussed previously, and which may include RAN nodes 311 discussed previously; and a DN 403, which may be, for example, operator services, Internet access or 3rd party services; and a 5GC 440. The 5GC 440 may include an AUSF 422; an AMF 421; a SMF 424; a NEF 423; a PCF 426; a NRF 425; a UDM 427; an AF 428; a UPF 402; and a NSSF 429.

[0081] The UPF 402 may act as an anchor point for intra-RAT and inter-RAT mobility, an external PDU session point of interconnect to DN 403, and a branching point to support multi-homed PDU session. The UPF 402 may also perform packet routing and forwarding, perform packet inspection, enforce the user plane part of policy rules, lawfully intercept packets (UP collection), perform traffic usage reporting, perform QoS handling for a user plane (e.g., packet filtering, gating, UL/DL rate enforcement), perform

Uplink Traffic verification (e.g., SDF to QoS flow mapping), transport level packet marking in the uplink and downlink, and perform downlink packet buffering and downlink data notification triggering. UPF 402 may include an uplink classifier to support routing traffic flows to a data network. The DN 403 may represent various network operator services, Internet access, or third party services. DN 403 may include, or be similar to, application server 330 discussed previously. The UPF 402 may interact with the SMF 424 via an N4 reference point between the SMF 424 and the UPF 402.

[0082] The AUSF 422 may store data for authentication of UE 401 and handle authentication-related functionality. The AUSF 422 may facilitate a common authentication framework for various access types. The AUSF 422 may communicate with the AMF 421 via an N12 reference point between the AMF 421 and the AUSF 422; and may communicate with the UDM 427 via an N13 reference point between the UDM 427 and the AUSF 422. Additionally, the AUSF 422 may exhibit an Nausf service-based interface.

[0083] The AMF 421 may be responsible for registration management (e.g., for registering UE 401, etc.), connection management, reachability management, mobility management, and lawful interception of AMF-related events, and access authentication and authorization. The AMF 421 may be a termination point for the an N11 reference point between the AMF 421 and the SMF 424. The AMF 421 may provide transport for SM messages between the UE 401 and the SMF 424, and act as a transparent proxy for routing SM messages. AMF 421 may also provide transport for SMS messages between UE 401 and an SMSF (not shown by Figure 4B). AMF 421 may act as SEAF, which may include interaction with the AUSF 422 and the UE 401, receipt of an intermediate key that was established as a result of the UE 401 authentication process. Where USIM based authentication is used, the AMF 421 may retrieve the security material from the AUSF 422. AMF 421 may also include a SCM function, which receives a key from the SEA that it uses to derive access-network specific keys. Furthermore, AMF 421 may be a termination point of a RAN CP interface, which may include or be an N2 reference point between the (R)AN 410 and the AMF 421; and the AMF 421 may be a termination point of NAS (N1) signalling, and perform NAS ciphering and integrity protection.

[0084] AMF 421 may also support NAS signalling with a UE 401 over an N3 IWF interface. The N3IWF may be used to provide access to untrusted entities. N3IWF may be

a termination point for the N2 interface between the (R)AN 410 and the AMF 421 for the control plane, and may be a termination point for the N3 reference point between the (R)AN 410 and the UPF 402 for the user plane. As such, the AMF 421 may handle N2 signalling from the SMF 424 and the AMF 421 for PDU sessions and QoS, encapsulate/de-encapsulate packets for IPSec and N3 tunnelling, mark N3 user-plane packets in the uplink, and enforce QoS corresponding to N3 packet marking taking into account QoS requirements associated with such marking received over N2. N3IWF may also relay uplink and downlink control-plane NAS signalling between the UE 401 and AMF 421 via an N1 reference point between the UE 401 and the AMF 421, and relay uplink and downlink user-plane packets between the UE 401 and UPF 402. The N3IWF also provides mechanisms for IPsec tunnel establishment with the UE 401. The AMF 421 may exhibit an Namf service-based interface, and may be a termination point for an N14 reference point between two AMFs 421 and an N17 reference point between the AMF 421 and a 5G-EIR (not shown by Figure 4B).

[0085] The UE 401 may need to register with the AMF 421 in order to receive network services. RM is used to register or deregister the UE 401 with the network (e.g., AMF 421), and establish a UE context in the network (e.g., AMF 421). The UE 401 may operate in an RM-REGISTERED state or an RM-DEREGISTERED state. In the RM-DEREGISTERED state, the UE 401 is not registered with the network, and the UE context in AMF 421 holds no valid location or routing information for the UE 401 so the UE 401 is not reachable by the AMF 421. In the RM-REGISTERED state, the UE 401 is registered with the network, and the UE context in AMF 421 may hold a valid location or routing information for the UE 401 so the UE 401 is reachable by the AMF 421. In the RM-REGISTERED state, the UE 401 may perform mobility Registration Update procedures, perform periodic Registration Update procedures triggered by expiration of the periodic update timer (e.g., to notify the network that the UE 401 is still active), and perform a Registration Update procedure to update UE capability information or to re-negotiate protocol parameters with the network, among others.

[0086] The AMF 421 may store one or more RM contexts for the UE 401, where each RM context is associated with a specific access to the network. The RM context may be a data structure, database object, etc. that indicates or stores, inter alia, a registration state per access type and the periodic update timer. The AMF 421 may also store a 5GC MM

context that may be the same or similar to the (E)MM context discussed previously. In various embodiments, the AMF 421 may store a CE mode B Restriction parameter of the UE 401 in an associated MM context or RM context. The AMF 421 may also derive the value, when needed, from the UE's usage setting parameter already stored in the UE context (and/or MM/RM context).

[0087] CM may be used to establish and release a signaling connection between the UE 401 and the AMF 421 over the N1 interface. The signaling connection is used to enable NAS signaling exchange between the UE 401 and the CN 440, and comprises both the signaling connection between the UE and the AN (e.g., RRC connection or UE-N3IWF connection for non-3GPP access) and the N2 connection for the UE 401 between the AN (e.g., RAN 410) and the AMF 421. The UE 401 may operate in one of two CM states, CM-IDLE mode or CM-CONNECTED mode. When the UE 401 is operating in the CM-IDLE state/mode, the UE 401 may have no NAS signaling connection established with the AMF 421 over the N1 interface, and there may be (R)AN 410 signaling connection (e.g., N2 and/or N3 connections) for the UE 401. When the UE 401 is operating in the CM-CONNECTED state/mode, the UE 401 may have an established NAS signaling connection with the AMF 421 over the N1 interface, and there may be a (R)AN 410 signaling connection (e.g., N2 and/or N3 connections) for the UE 401. Establishment of an N2 connection between the (R)AN 410 and the AMF 421 may cause the UE 401 to transition from CM-IDLE mode to CM-CONNECTED mode, and the UE 401 may transition from the CM-CONNECTED mode to the CM-IDLE mode when N2 signaling between the (R)AN 410 and the AMF 421 is released.

[0088] The SMF 424 may be responsible for SM (e.g., session establishment, modify and release, including tunnel maintain between UPF and AN node); UE IP address allocation and management (including optional authorization); selection and control of UP function; configuring traffic steering at UPF to route traffic to proper destination; termination of interfaces toward policy control functions; controlling part of policy enforcement and QoS; lawful intercept (for SM events and interface to LI system); termination of SM parts of NAS messages; downlink data notification; initiating AN specific SM information, sent via AMF over N2 to AN; and determining SSC mode of a session. SM may refer to management of a PDU session, and a PDU session or "session" may refer to a PDU connectivity service that provides or enables the exchange of PDUs between a UE 401

and a data network (DN) 403 identified by a Data Network Name (DNN). PDU sessions may be established upon UE 401 request, modified upon UE 401 and 5GC 440 request, and released upon UE 401 and 5GC 440 request using NAS SM signaling exchanged over the N1 reference point between the UE 401 and the SMF 424. Upon request from an application server, the 5GC 440 may trigger a specific application in the UE 401. In response to receipt of the trigger message, the UE 401 may pass the trigger message (or relevant parts/information of the trigger message) to one or more identified applications in the UE 401. The identified application(s) in the UE 401 may establish a PDU session to a specific DNN. The SMF 424 may check whether the UE 401 requests are compliant with user subscription information associated with the UE 401. In this regard, the SMF 424 may retrieve and/or request to receive update notifications on SMF 424 level subscription data from the UDM 427.

[0089] The SMF 424 may include the following roaming functionality: handling local enforcement to apply QoS SLAs (VPLMN); charging data collection and charging interface (VPLMN); lawful intercept (in VPLMN for SM events and interface to LI system); and support for interaction with external DN for transport of signalling for PDU session authorization/authentication by external DN. An N16 reference point between two SMFs 424 may be included in the system 401, which may be between another SMF 424 in a visited network and the SMF 424 in the home network in roaming scenarios. Additionally, the SMF 424 may exhibit the Nsmf service-based interface.

[0090] The NEF 423 may provide means for securely exposing the services and capabilities provided by 3GPP network functions for third party, internal exposure/re-exposure, Application Functions (e.g., AF 428), edge computing or fog computing systems, etc. In such embodiments, the NEF 423 may authenticate, authorize, and/or throttle the AFs. NEF 423 may also translate information exchanged with the AF 428 and information exchanged with internal network functions. For example, the NEF 423 may translate between an AF-Service-Identifier and an internal 5GC information. NEF 423 may also receive information from other network functions (NFs) based on exposed capabilities of other network functions. This information may be stored at the NEF 423 as structured data, or at a data storage NF using standardized interfaces. The stored information can then be re-exposed by the NEF 423 to other NFs and AFs, and/or used

for other purposes such as analytics. Additionally, the NEF 423 may exhibit an Nnef service-based interface.

[0091] The NRF 425 may support service discovery functions, receive NF discovery requests from NF instances, and provide the information of the discovered NF instances to the NF instances. NRF 425 also maintains information of available NF instances and their supported services. As used herein, the terms “instantiate,” “instantiation,” and the like may refer to the creation of an instance, and an “instance” may refer to a concrete occurrence of an object, which may occur, for example, during execution of program code. Additionally, the NRF 425 may exhibit the Nnrf service-based interface.

[0092] The PCF 426 may provide policy rules to control plane function(s) to enforce them, and may also support unified policy framework to govern network behaviour. The PCF 426 may also implement an FE to access subscription information relevant for policy decisions in a UDR of the UDM 427. The PCF 426 may communicate with the AMF 421 via an N15 reference point between the PCF 426 and the AMF 421, which may include a PCF 426 in a visited network and the AMF 421 in case of roaming scenarios. The PCF 426 may communicate with the AF 428 via an N5 reference point between the PCF 426 and the AF 428; and with the SMF 424 via an N7 reference point between the PCF 426 and the SMF 424. The system 401 and/or CN 440 may also include an N24 reference point between the PCF 426 (in the home network) and a PCF 426 in a visited network. Additionally, the PCF 426 may exhibit an Npcf service-based interface.

[0093] The UDM 427 may handle subscription-related information to support the network entities’ handling of communication sessions, and may store subscription data of UE 401. For example, subscription data may be communicated between the UDM 427 and the AMF 421 via an N8 reference point between the UDM 427 and the AMF. The UDM 427 may include two parts, an application FE and a UDR (the FE and UDR are not shown by Figure 4B). The UDR may store subscription data and policy data for the UDM 427 and the PCF 426, and/or structured data for exposure and application data (including PFDs for application detection, application request information for multiple UEs 401) for the NEF 423. The Nudr service-based interface may be exhibited by the UDR 221 to allow the UDM 427, PCF 426, and NEF 423 to access a particular set of the stored data, as well as to read, update (e.g., add, modify), delete, and subscribe to notification of relevant data changes in the UDR. The UDM may include a UDM-FE, which is in charge

of processing credentials, location management, subscription management and so on. Several different front ends may serve the same user in different transactions. The UDM-FE accesses subscription information stored in the UDR and performs authentication credential processing, user identification handling, access authorization, registration/mobility management, and subscription management. The UDR may interact with the SMF 424 via an N10 reference point between the UDM 427 and the SMF 424. UDM 427 may also support SMS management, wherein an SMS-FE implements the similar application logic as discussed previously. Additionally, the UDM 427 may exhibit the Nudm service-based interface.

[0094] The AF 428 may provide application influence on traffic routing, provide access to the NCE, and interact with the policy framework for policy control. The NCE may be a mechanism that allows the 5GC 440 and AF 428 to provide information to each other via NEF 423, which may be used for edge computing implementations. In such implementations, the network operator and third party services may be hosted close to the UE 401 access point of attachment to achieve an efficient service delivery through the reduced end-to-end latency and load on the transport network. For edge computing implementations, the 5GC may select a UPF 402 close to the UE 401 and execute traffic steering from the UPF 402 to DN 403 via the N6 interface. This may be based on the UE subscription data, UE location, and information provided by the AF 428. In this way, the AF 428 may influence UPF (re)selection and traffic routing. Based on operator deployment, when AF 428 is considered to be a trusted entity, the network operator may permit AF 428 to interact directly with relevant NFs. Additionally, the AF 428 may exhibit an Naf service-based interface.

[0095] The NSSF 429 may select a set of network slice instances serving the UE 401. The NSSF 429 may also determine allowed NSSAI and the mapping to the subscribed S-NSSAIs, if needed. The NSSF 429 may also determine the AMF set to be used to serve the UE 401, or a list of candidate AMF(s) 421 based on a suitable configuration and possibly by querying the NRF 425. The selection of a set of network slice instances for the UE 401 may be triggered by the AMF 421 with which the UE 401 is registered by interacting with the NSSF 429, which may lead to a change of AMF 421. The NSSF 429 may interact with the AMF 421 via an N22 reference point between AMF 421 and NSSF 429; and may communicate with another NSSF 429 in a visited network via an N31

reference point (not shown by Figure 4B). Additionally, the NSSF 429 may exhibit an Nnssf service-based interface.

[0096] As discussed previously, the CN 440 may include an SMSF, which may be responsible for SMS subscription checking and verification, and relaying SM messages to/from the UE 401 to/from other entities, such as an SMS-GMSC/IWMSC/SMS-router. The SMS may also interact with AMF 421 and UDM 427 for a notification procedure that the UE 401 is available for SMS transfer (e.g., set a UE not reachable flag, and notifying UDM 427 when UE 401 is available for SMS).

[0097] The CN 120 may also include other elements that are not shown by Figure 4B, such as a Data Storage system/architecture, a 5G-EIR, a SEPP, and the like. The Data Storage system may include a SDSF, an UDSF, and/or the like. Any NF may store and retrieve unstructured data into/from the UDSF (e.g., UE contexts), via N18 reference point between any NF and the UDSF (not shown by Figure 4B). Individual NFs may share a UDSF for storing their respective unstructured data or individual NFs may each have their own UDSF located at or near the individual NFs. Additionally, the UDSF may exhibit an Nudsf service-based interface (not shown by Figure 4B). The 5G-EIR may be an NF that checks the status of PEI for determining whether particular equipment/entities are blacklisted from the network; and the SEPP may be a non-transparent proxy that performs topology hiding, message filtering, and policing on inter-PLMN control plane interfaces.

[0098] Additionally, there may be many more reference points and/or service-based interfaces between the NF services in the NFs; however, these interfaces and reference points have been omitted from Figure 4B for clarity. In one example, the CN 440 may include an Nx interface, which is an inter-CN interface between the MME (e.g., MME 411) and the AMF 421 in order to enable interworking between CN 440 and CN 420. Other example interfaces/reference points may include an N5g-EIR service-based interface exhibited by a 5G-EIR, an N27 reference point between the NRF in the visited network and the NRF in the home network; and an N31 reference point between the NSSF in the visited network and the NSSF in the home network.

[0099] Figure 5A illustrates an example of infrastructure equipment 500 in accordance with various embodiments. The infrastructure equipment 500 (or “system 500”) may be implemented as a base station, radio head, RAN node such as the RAN nodes 311 and/or

AP 306 shown and described previously, application server(s) 330, and/or any other element/device discussed herein. In other examples, the system 500 could be implemented in or by a UE.

[0100] The system 500 includes application circuitry 505, baseband circuitry 510, one or more radio front end modules (RFEMs) 515, memory circuitry 520, power management integrated circuitry (PMIC) 525, power tee circuitry 531, network controller circuitry 535, network interface connector 540, satellite positioning circuitry 545, and user interface 550. In some embodiments, the device 500 may include additional elements such as, for example, memory/storage, display, camera, sensor, or input/output (I/O) interface. In other embodiments, the components described below may be included in more than one device. For example, said circuitries may be separately included in more than one device for CRAN, vBBU, or other like implementations.

[0101] Application circuitry 505 includes circuitry such as, but not limited to one or more processors (or processor cores), cache memory, and one or more of low drop-out voltage regulators (LDOs), interrupt controllers, serial interfaces such as SPI, I^2C or universal programmable serial interface module, real time clock (RTC), timer-counters including interval and watchdog timers, general purpose input/output (I/O or IO), memory card controllers such as Secure Digital (SD) MultiMediaCard (MMC) or similar, Universal Serial Bus (USB) interfaces, Mobile Industry Processor Interface (MIPI) interfaces and Joint Test Access Group (JTAG) test access ports. The processors (or cores) of the application circuitry 505 may be coupled with or may include memory/storage elements and may be configured to execute instructions stored in the memory/storage to enable various applications or operating systems to run on the system 500. In some implementations, the memory/storage elements may be on-chip memory circuitry, which may include any suitable volatile and/or non-volatile memory, such as DRAM, SRAM, EPROM, EEPROM, Flash memory, solid-state memory, and/or any other type of memory device technology, such as those discussed herein.

[0102] The processor(s) of application circuitry 505 may include, for example, one or more processor cores (CPUs), one or more application processors, one or more graphics processing units (GPUs), one or more reduced instruction set computing (RISC) processors, one or more Acorn RISC Machine (ARM) processors, one or more complex instruction set computing (CISC) processors, one or more digital signal processors (DSP),

one or more FPGAs, one or more PLDs, one or more ASICs, one or more microprocessors or controllers, or any suitable combination thereof. In some embodiments, the application circuitry 505 may comprise, or may be, a special-purpose processor/controller to operate according to the various embodiments herein. As examples, the processor(s) of application circuitry 505 may include one or more Intel Pentium®, Core®, or Xeon® processor(s); Advanced Micro Devices (AMD) Ryzen® processor(s), Accelerated Processing Units (APUs), or Epyc® processors; ARM-based processor(s) licensed from ARM Holdings, Ltd. such as the ARM Cortex-A family of processors and the ThunderX2® provided by Cavium(TM), Inc.; a MIPS-based design from MIPS Technologies, Inc. such as MIPS Warrior P-class processors; and/or the like. In some embodiments, the system 500 may not utilize application circuitry 505, and instead may include a special-purpose processor/controller to process IP data received from an EPC or 5GC, for example.

[0103] In some implementations, the application circuitry 505 may include one or more hardware accelerators, which may be microprocessors, programmable processing devices, or the like. The one or more hardware accelerators may include, for example, computer vision (CV) and/or deep learning (DL) accelerators. As examples, the programmable processing devices may be one or more a field-programmable devices (FPDs) such as field-programmable gate arrays (FPGAs) and the like; programmable logic devices (PLDs) such as complex PLDs (CPLDs), high-capacity PLDs (HCPLDs), and the like; ASICs such as structured ASICs and the like; programmable SoCs (PSoCs); and the like. In such implementations, the circuitry of application circuitry 505 may comprise logic blocks or logic fabric, and other interconnected resources that may be programmed to perform various functions, such as the procedures, methods, functions, etc. of the various embodiments discussed herein. In such embodiments, the circuitry of application circuitry 505 may include memory cells (e.g., erasable programmable read-only memory (EPROM), electrically erasable programmable read-only memory (EEPROM), flash memory, static memory (e.g., static random access memory (SRAM), anti-fuses, etc.)) used to store logic blocks, logic fabric, data, etc. in look-up-tables (LUTs) and the like.

[0104] The baseband circuitry 510 may be implemented, for example, as a solder-down substrate including one or more integrated circuits, a single packaged integrated circuit soldered to a main circuit board or a multi-chip module containing two or more integrated

circuits. The various hardware electronic elements of baseband circuitry 510 are discussed infra with regard to Figure 6.

[0105] User interface circuitry 550 may include one or more user interfaces designed to enable user interaction with the system 500 or peripheral component interfaces designed to enable peripheral component interaction with the system 500. User interfaces may include, but are not limited to, one or more physical or virtual buttons (e.g., a reset button), one or more indicators (e.g., light emitting diodes (LEDs)), a physical keyboard or keypad, a mouse, a touchpad, a touchscreen, speakers or other audio emitting devices, microphones, a printer, a scanner, a headset, a display screen or display device, etc. Peripheral component interfaces may include, but are not limited to, a nonvolatile memory port, a universal serial bus (USB) port, an audio jack, a power supply interface, etc.

[0106] The radio front end modules (RFEMs) 515 may comprise a millimeter wave (mmWave) RFEM and one or more sub-mmWave radio frequency integrated circuits (RFICs). In some implementations, the one or more sub-mmWave RFICs may be physically separated from the mmWave RFEM. The RFICs may include connections to one or more antennas or antenna arrays (see e.g., antenna array 611 of Figure 6 infra), and the RFEM may be connected to multiple antennas. In alternative implementations, both mmWave and sub-mmWave radio functions may be implemented in the same physical RFEM 515, which incorporates both mmWave antennas and sub-mmWave.

[0107] The memory circuitry 520 may include one or more of volatile memory including dynamic random access memory (DRAM) and/or synchronous dynamic random access memory (SDRAM), and nonvolatile memory (NVM) including high-speed electrically erasable memory (commonly referred to as Flash memory), phase change random access memory (PRAM), magnetoresistive random access memory (MRAM), etc., and may incorporate the three-dimensional (3D) cross-point (XPOINT) memories from Intel® and Micron®. Memory circuitry 520 may be implemented as one or more of solder down packaged integrated circuits, socketed memory modules and plug-in memory cards.

[0108] The PMIC 525 may include voltage regulators, surge protectors, power alarm detection circuitry, and one or more backup power sources such as a battery or capacitor. The power alarm detection circuitry may detect one or more of brown out (under-voltage) and surge (over-voltage) conditions. The power tee circuitry 531 may provide for

electrical power drawn from a network cable to provide both power supply and data connectivity to the infrastructure equipment 500 using a single cable.

[0109] The network controller circuitry 535 may provide connectivity to a network using a standard network interface protocol such as Ethernet, Ethernet over GRE Tunnels, Ethernet over Multiprotocol Label Switching (MPLS), or some other suitable protocol. Network connectivity may be provided to/from the infrastructure equipment 500 via network interface connector 540 using a physical connection, which may be electrical (commonly referred to as a "copper interconnect"), optical, or wireless. The network controller circuitry 535 may include one or more dedicated processors and/or FPGAs to communicate using one or more of the aforementioned protocols. In some implementations, the network controller circuitry 535 may include multiple controllers to provide connectivity to other networks using the same or different protocols.

[0110] The positioning circuitry 545 includes circuitry to receive and decode signals transmitted/broadcasted by a positioning network of a global navigation satellite system (GNSS). Examples of navigation satellite constellations (or GNSS) include United States' Global Positioning System (GPS), Russia's Global Navigation System (GLONASS), the European Union's Galileo system, China's BeiDou Navigation Satellite System, a regional navigation system or GNSS augmentation system (e.g., Navigation with Indian Constellation (NAVIC), Japan's Quasi-Zenith Satellite System (QZSS), France's Doppler Orbitography and Radio-positioning Integrated by Satellite (DORIS), etc.), or the like. The positioning circuitry 545 comprises various hardware elements (e.g., including hardware devices such as switches, filters, amplifiers, antenna elements, and the like to facilitate OTA communications) to communicate with components of a positioning network, such as navigation satellite constellation nodes. In some embodiments, the positioning circuitry 545 may include a Micro-Technology for Positioning, Navigation, and Timing (Micro-PNT) IC that uses a master timing clock to perform position tracking/estimation without GNSS assistance. The positioning circuitry 545 may also be part of, or interact with, the baseband circuitry 510 and/or RFEMs 515 to communicate with the nodes and components of the positioning network. The positioning circuitry 545 may also provide position data and/or time data to the application circuitry 505, which may use the data to synchronize operations with various infrastructure (e.g., RAN nodes 311, etc.), or the like.

[0111] The components shown by Figure 5A may communicate with one another using interface circuitry, which may include any number of bus and/or interconnect (IX) technologies such as industry standard architecture (ISA), extended ISA (EISA), peripheral component interconnect (PCI), peripheral component interconnect extended (PCIx), PCI express (PCIe), or any number of other technologies. The bus/IX may be a proprietary bus, for example, used in a SoC based system. Other bus/IX systems may be included, such as an I^2C interface, an SPI interface, point to point interfaces, and a power bus, among others.

[0112] Figure 5B illustrates an example of a platform 501 (or "device 501") in accordance with various embodiments. In embodiments, the computer platform 501 may be suitable for use as UEs 301a, 301b, 401, application servers 330, and/or any other element/device discussed herein. The platform 501 may include any combinations of the components shown in the example. The components of platform 501 may be implemented as integrated circuits (ICs), portions thereof, discrete electronic devices, or other modules, logic, hardware, software, firmware, or a combination thereof adapted in the computer platform 501, or as components otherwise incorporated within a chassis of a larger system. The block diagram of Figure 5B is intended to show a high level view of components of the computer platform 501. However, some of the components shown may be omitted, additional components may be present, and different arrangement of the components shown may occur in other implementations.

[0113] Application circuitry 555 includes circuitry such as, but not limited to one or more processors (or processor cores), cache memory, and one or more of LDOs, interrupt controllers, serial interfaces such as SPI, I^2C or universal programmable serial interface module, RTC, timer-counters including interval and watchdog timers, general purpose I/O, memory card controllers such as SD MMC or similar, USB interfaces, MIPI interfaces, and JTAG test access ports. The processors (or cores) of the application circuitry 555 may be coupled with or may include memory/storage elements and may be configured to execute instructions stored in the memory/storage to enable various applications or operating systems to run on the system 501. In some implementations, the memory/storage elements may be on-chip memory circuitry, which may include any suitable volatile and/or non-volatile memory, such as DRAM, SRAM, EPROM,

EEPROM, Flash memory, solid-state memory, and/or any other type of memory device technology, such as those discussed herein.

[0114] The processor(s) of application circuitry 505 may include, for example, one or more processor cores, one or more application processors, one or more GPUs, one or more RISC processors, one or more ARM processors, one or more CISC processors, one or more DSP, one or more FPGAs, one or more PLDs, one or more ASICs, one or more microprocessors or controllers, a multithreaded processor, an ultra-low voltage processor, an embedded processor, some other known processing element, or any suitable combination thereof. In some embodiments, the application circuitry 505 may comprise, or may be, a special-purpose processor/controller to operate according to the various embodiments herein.

[0115] As examples, the processor(s) of application circuitry 555 may include an Intel® Architecture Core™ based processor, such as a Quark™, an Atom™, an i3, an i5, an i7, or an MCU-class processor, or another such processor available from Intel® Corporation, Santa Clara, CA. The processors of the application circuitry 555 may also be one or more of Advanced Micro Devices (AMD) Ryzen® processor(s) or Accelerated Processing Units (APUs); A5-A9 processor(s) from Apple® Inc., Snapdragon™ processor(s) from Qualcomm® Technologies, Inc., Texas Instruments, Inc.® Open Multimedia Applications Platform (OMAP)™ processor(s); a MIPS-based design from MIPS Technologies, Inc. such as MIPS Warrior M-class, Warrior I-class, and Warrior P-class processors; an ARM-based design licensed from ARM Holdings, Ltd., such as the ARM Cortex-A, Cortex-R, and Cortex-M family of processors; or the like. In some implementations, the application circuitry 555 may be a part of a system on a chip (SoC) in which the application circuitry 555 and other components are formed into a single integrated circuit, or a single package, such as the Edison™ or Galileo™ SoC boards from Intel® Corporation.

[0116] Additionally or alternatively, application circuitry 555 may include circuitry such as, but not limited to, one or more a field-programmable devices (FPDs) such as FPGAs and the like; programmable logic devices (PLDs) such as complex PLDs (CPLDs), high-capacity PLDs (HCPLDs), and the like; ASICs such as structured ASICs and the like; programmable SoCs (PSoCs); and the like. In such embodiments, the circuitry of application circuitry 555 may comprise logic blocks or logic fabric, and other

interconnected resources that may be programmed to perform various functions, such as the procedures, methods, functions, etc. of the various embodiments discussed herein. In such embodiments, the circuitry of application circuitry 555 may include memory cells (e.g., erasable programmable read-only memory (EPROM), electrically erasable programmable read-only memory (EEPROM), flash memory, static memory (e.g., static random access memory (SRAM), anti-fuses, etc.)) used to store logic blocks, logic fabric, data, etc. in look-up tables (LUTs) and the like.

[0117] The baseband circuitry 560 may be implemented, for example, as a solder-down substrate including one or more integrated circuits, a single packaged integrated circuit soldered to a main circuit board or a multi-chip module containing two or more integrated circuits. The various hardware electronic elements of baseband circuitry 560 are discussed infra with regard to Figure 6.

[0118] The RFEMs 565 may comprise a millimeter wave (mmWave) RFEM and one or more sub-mmWave radio frequency integrated circuits (RFICs). In some implementations, the one or more sub-mmWave RFICs may be physically separated from the mmWave RFEM. The RFICs may include connections to one or more antennas or antenna arrays (see e.g., antenna array 611 of Figure 6 infra), and the RFEM may be connected to multiple antennas. In alternative implementations, both mmWave and sub-mmWave radio functions may be implemented in the same physical RFEM 565, which incorporates both mmWave antennas and sub-mmWave.

[0119] The memory circuitry 570 may include any number and type of memory devices used to provide for a given amount of system memory. As examples, the memory circuitry 570 may include one or more of volatile memory including random access memory (RAM), dynamic RAM (DRAM) and/or synchronous dynamic RAM (SDRAM), and nonvolatile memory (NVM) including high-speed electrically erasable memory (commonly referred to as Flash memory), phase change random access memory (PRAM), magnetoresistive random access memory (MRAM), etc. The memory circuitry 570 may be developed in accordance with a Joint Electron Devices Engineering Council (JEDEC) low power double data rate (LPDDR)-based design, such as LPDDR2, LPDDR3, LPDDR4, or the like. Memory circuitry 570 may be implemented as one or more of solder down packaged integrated circuits, single die package (SDP), dual die package (DDP) or quad die package (Q17P), socketed memory modules, dual inline memory

modules (DIMMs) including microDIMMs or MiniDIMMs, and/or soldered onto a motherboard via a ball grid array (BGA). In low power implementations, the memory circuitry 570 may be on-die memory or registers associated with the application circuitry 555. To provide for persistent storage of information such as data, applications, operating systems and so forth, memory circuitry 570 may include one or more mass storage devices, which may include, inter alia, a solid state disk drive (SSDD), hard disk drive (HDD), a micro HDD, resistance change memories, phase change memories, holographic memories, or chemical memories, among others. For example, the computer platform 501 may incorporate the three-dimensional (3D) cross-point (XPOINT) memories from Intel® and Micron®.

[0120] Removable memory circuitry 523 may include devices, circuitry, enclosures/housings, ports or receptacles, etc. used to couple portable data storage devices with the platform 501. These portable data storage devices may be used for mass storage purposes, and may include, for example, flash memory cards (e.g., Secure Digital (SD) cards, microSD cards, xD picture cards, and the like), and USB flash drives, optical discs, external HDDs, and the like.

[0121] The platform 501 may also include interface circuitry (not shown) that is used to connect external devices with the platform 501. The external devices connected to the platform 501 via the interface circuitry include sensor circuitry 521 and electro-mechanical components (EMCs) 522, as well as removable memory devices coupled to removable memory circuitry 523.

[0122] The sensor circuitry 521 include devices, modules, or subsystems whose purpose is to detect events or changes in its environment and send the information (sensor data) about the detected events to some other a device, module, subsystem, etc. Examples of such sensors include, inter alia, inertia measurement units (IMUs) comprising accelerometers, gyroscopes, and/or magnetometers; microelectromechanical systems (MEMS) or nanoelectromechanical systems (NEMS) comprising 3-axis accelerometers, 3-axis gyroscopes, and/or magnetometers; level sensors; flow sensors; temperature sensors (e.g., thermistors); pressure sensors; barometric pressure sensors; gravimeters; altimeters; image capture devices (e.g., cameras or lensless apertures); light detection and ranging (LiDAR) sensors; proximity sensors (e.g., infrared radiation detector and the

like), depth sensors, ambient light sensors, ultrasonic transceivers; microphones or other like audio capture devices; etc.

[0123] EMCs 522 include devices, modules, or subsystems whose purpose is to enable platform 501 to change its state, position, and/or orientation, or move or control a mechanism or (sub)system. Additionally, EMCs 522 may be configured to generate and send messages/signalling to other components of the platform 501 to indicate a current state of the EMCs 522. Examples of the EMCs 522 include one or more power switches, relays including electromechanical relays (EMRs) and/or solid state relays (SSRs), actuators (e.g., valve actuators, etc.), an audible sound generator, a visual warning device, motors (e.g., DC motors, stepper motors, etc.), wheels, thrusters, propellers, claws, clamps, hooks, and/or other like electro-mechanical components. In embodiments, platform 501 is configured to operate one or more EMCs 522 based on one or more captured events and/or instructions or control signals received from a service provider and/or various clients.

[0124] In some implementations, the interface circuitry may connect the platform 501 with positioning circuitry 595. The positioning circuitry 595 includes circuitry to receive and decode signals transmitted/broadcasted by a positioning network of a GNSS. Examples of navigation satellite constellations (or GNSS) include United States' GPS, Russia's GLONASS, the European Union's Galileo system, China's BeiDou Navigation Satellite System, a regional navigation system or GNSS augmentation system (e.g., NAVIC), Japan's QZSS, France's DORIS, etc.), or the like. The positioning circuitry 595 comprises various hardware elements (e.g., including hardware devices such as switches, filters, amplifiers, antenna elements, and the like to facilitate OTA communications) to communicate with components of a positioning network, such as navigation satellite constellation nodes. In some embodiments, the positioning circuitry 595 may include a Micro-PNT IC that uses a master timing clock to perform position tracking/estimation without GNSS assistance. The positioning circuitry 595 may also be part of, or interact with, the baseband circuitry 510 and/or RFEMs 565 to communicate with the nodes and components of the positioning network. The positioning circuitry 595 may also provide position data and/or time data to the application circuitry 555, which may use the data to synchronize operations with various infrastructure (e.g., radio base stations), for turn-by-turn navigation applications, or the like

[0125] In some implementations, the interface circuitry may connect the platform 501 with Near-Field Communication (NFC) circuitry 590. NFC circuitry 590 is configured to provide contactless, short-range communications based on radio frequency identification (RFID) standards, wherein magnetic field induction is used to enable communication between NFC circuitry 590 and NFC-enabled devices external to the platform 501 (e.g., an "NFC touchpoint"). NFC circuitry 590 comprises an NFC controller coupled with an antenna element and a processor coupled with the NFC controller. The NFC controller may be a chip/IC providing NFC functionalities to the NFC circuitry 590 by executing NFC controller firmware and an NFC stack. The NFC stack may be executed by the processor to control the NFC controller, and the NFC controller firmware may be executed by the NFC controller to control the antenna element to emit short-range RF signals. The RF signals may power a passive NFC tag (e.g., a microchip embedded in a sticker or wristband) to transmit stored data to the NFC circuitry 590, or initiate data transfer between the NFC circuitry 590 and another active NFC device (e.g., a smartphone or an NFC-enabled POS terminal) that is proximate to the platform 501.

[0126] The driver circuitry 596 may include software and hardware elements that operate to control particular devices that are embedded in the platform 501, attached to the platform 501, or otherwise communicatively coupled with the platform 501. The driver circuitry 596 may include individual drivers allowing other components of the platform 501 to interact with or control various input/output (I/O) devices that may be present within, or connected to, the platform 501. For example, driver circuitry 596 may include a display driver to control and allow access to a display device, a touchscreen driver to control and allow access to a touchscreen interface of the platform 501, sensor drivers to obtain sensor readings of sensor circuitry 521 and control and allow access to sensor circuitry 521, EMC drivers to obtain actuator positions of the EMCs 522 and/or control and allow access to the EMCs 522, a camera driver to control and allow access to an embedded image capture device, audio drivers to control and allow access to one or more audio devices.

[0127] The power management integrated circuitry (PMIC) 575 (also referred to as "power management circuitry 575") may manage power provided to various components of the platform 501. In particular, with respect to the baseband circuitry 560, the PMIC 575 may control power-source selection, voltage scaling, battery charging, or DC-to-DC

conversion. The PMIC 575 may often be included when the platform 501 is capable of being powered by a battery 530, for example, when the device is included in a UE 301a, 301b, 401.

[0128] In some embodiments, the PMIC 575 may control, or otherwise be part of, various power saving mechanisms of the platform 501. For example, if the platform 501 is in an RRC_Connected state, where it is still connected to the RAN node as it expects to receive traffic shortly, then it may enter a state known as Discontinuous Reception Mode (DRX) after a period of inactivity. During this state, the platform 501 may power down for brief intervals of time and thus save power. If there is no data traffic activity for an extended period of time, then the platform 501 may transition off to an RRC_Idle state, where it disconnects from the network and does not perform operations such as channel quality feedback, handover, etc. The platform 501 goes into a very low power state and it performs paging where again it periodically wakes up to listen to the network and then powers down again. The platform 501 may not receive data in this state; in order to receive data, it must transition back to RRC_Connected state. An additional power saving mode may allow a device to be unavailable to the network for periods longer than a paging interval (ranging from seconds to a few hours). During this time, the device is totally unreachable to the network and may power down completely. Any data sent during this time incurs a large delay and it is assumed the delay is acceptable.

[0129] A battery 530 may power the platform 501, although in some examples the platform 501 may be mounted deployed in a fixed location, and may have a power supply coupled to an electrical grid. The battery 530 may be a lithium ion battery, a metal-air battery, such as a zinc-air battery, an aluminum-air battery, a lithium-air battery, and the like. In some implementations, such as in V2X applications, the battery 530 may be a typical lead-acid automotive battery.

[0130] In some implementations, the battery 530 may be a “smart battery,” which includes or is coupled with a Battery Management System (BMS) or battery monitoring integrated circuitry. The BMS may be included in the platform 501 to track the state of charge (SoCh) of the battery 530. The BMS may be used to monitor other parameters of the battery 530 to provide failure predictions, such as the state of health (SoH) and the state of function (SoF) of the battery 530. The BMS may communicate the information of the battery 530 to the application circuitry 555 or other components of the platform 501.

The BMS may also include an analog-to-digital (ADC) convertor that allows the application circuitry 555 to directly monitor the voltage of the battery 530 or the current flow from the battery 530. The battery parameters may be used to determine actions that the platform 501 may perform, such as transmission frequency, network operation, sensing frequency, and the like.

[0131] A power block, or other power supply coupled to an electrical grid may be coupled with the BMS to charge the battery 530. In some examples, the power block 530 may be replaced with a wireless power receiver to obtain the power wirelessly, for example, through a loop antenna in the computer platform 501. In these examples, a wireless battery charging circuit may be included in the BMS. The specific charging circuits chosen may depend on the size of the battery 530, and thus, the current required. The charging may be performed using the Airfuel standard promulgated by the Airfuel Alliance, the Qi wireless charging standard promulgated by the Wireless Power Consortium, or the Rezence charging standard promulgated by the Alliance for Wireless Power, among others.

[0132] User interface circuitry 591 includes various input/output (I/O) devices present within, or connected to, the platform 501, and includes one or more user interfaces designed to enable user interaction with the platform 501 and/or peripheral component interfaces designed to enable peripheral component interaction with the platform 501. The user interface circuitry 591 includes input device circuitry and output device circuitry. Input device circuitry includes any physical or virtual means for accepting an input including, inter alia, one or more physical or virtual buttons (e.g., a reset button), a physical keyboard, keypad, mouse, touchpad, touchscreen, microphones, scanner, headset, and/or the like. The output device circuitry includes any physical or virtual means for showing information or otherwise conveying information, such as sensor readings, actuator position(s), or other like information. Output device circuitry may include any number and/or combinations of audio or visual display, including, inter alia, one or more simple visual outputs/indicators (e.g., binary status indicators (e.g., light emitting diodes (LEDs)) and multi-character visual outputs, or more complex outputs such as display devices or touchscreens (e.g., Liquid Chrystal Displays (LCD), LED displays, quantum dot displays, projectors, etc.), with the output of characters, graphics, multimedia objects, and the like being generated or produced from the operation of the

platform 501. The output device circuitry may also include speakers or other audio emitting devices, printer(s), and/or the like. In some embodiments, the sensor circuitry 521 may be used as the input device circuitry (e.g., an image capture device, motion capture device, or the like) and one or more EMCs may be used as the output device circuitry (e.g., an actuator to provide haptic feedback or the like). In another example, NFC circuitry comprising an NFC controller coupled with an antenna element and a processing device may be included to read electronic tags and/or connect with another NFC-enabled device. Peripheral component interfaces may include, but are not limited to, a non-volatile memory port, a USB port, an audio jack, a power supply interface, etc.

[0133] Although not shown, the components of platform 501 may communicate with one another using a suitable bus or interconnect (IX) technology, which may include any number of technologies, including ISA, EISA, PCI, PCIx, PCIe, a Time-Trigger Protocol (TTP) system, a FlexRay system, or any number of other technologies. The bus/IX may be a proprietary bus/IX, for example, used in a SoC based system. Other bus/IX systems may be included, such as an I^2C interface, an SPI interface, point-to-point interfaces, and a power bus, among others.

[0134] Figure 6 illustrates example components of baseband circuitry 610 and radio front end modules (RFEM) 615 in accordance with various embodiments. The baseband circuitry 610 corresponds to the baseband circuitry 510 and 560 of Figures 5A and 5B, respectively. The RFEM 615 corresponds to the RFEM 515 and 565 of Figures 5A and 5B, respectively. As shown, the RFEMs 615 may include Radio Frequency (RF) circuitry 606, front-end module (FEM) circuitry 608, antenna array 611 coupled together at least as shown.

[0135] The baseband circuitry 610 includes circuitry and/or control logic configured to carry out various radio/network protocol and radio control functions that enable communication with one or more radio networks via the RF circuitry 606. The radio control functions may include, but are not limited to, signal modulation/demodulation, encoding/decoding, radio frequency shifting, etc. In some embodiments, modulation/demodulation circuitry of the baseband circuitry 610 may include Fast-Fourier Transform (FFT), precoding, or constellation mapping/demapping functionality. In some embodiments, encoding/decoding circuitry of the baseband circuitry 610 may include convolution, tail-biting convolution, turbo, Viterbi, or Low

Density Parity Check (LDPC) encoder/decoder functionality. Embodiments of modulation/demodulation and encoder/decoder functionality are not limited to these examples and may include other suitable functionality in other embodiments. The baseband circuitry 610 is configured to process baseband signals received from a receive signal path of the RF circuitry 606 and to generate baseband signals for a transmit signal path of the RF circuitry 606. The baseband circuitry 610 is configured to interface with application circuitry 505/555 (see Figures 5A and 5B) for generation and processing of the baseband signals and for controlling operations of the RF circuitry 606. The baseband circuitry 610 may handle various radio control functions.

[0136] The aforementioned circuitry and/or control logic of the baseband circuitry 610 may include one or more single or multi-core processors. For example, the one or more processors may include a 3G baseband processor 604A, a 4G/LTE baseband processor 604B, a 5G/NR baseband processor 604C, or some other baseband processor(s) 604D for other existing generations, generations in development or to be developed in the future (e.g., sixth generation (6G), etc.). In other embodiments, some or all of the functionality of baseband processors 604A-D may be included in modules stored in the memory 604G and executed via a Central Processing Unit (CPU) 604E. In other embodiments, some or all of the functionality of baseband processors 604A-D may be provided as hardware accelerators (e.g., FPGAs, ASICs, etc.) loaded with the appropriate bit streams or logic blocks stored in respective memory cells. In various embodiments, the memory 604G may store program code of a real-time OS (RTOS), which when executed by the CPU 604E (or other baseband processor), is to cause the CPU 604E (or other baseband processor) to manage resources of the baseband circuitry 610, schedule tasks, etc. Examples of the RTOS may include Operating System Embedded (OSE)™ provided by Enea®, Nucleus RTOS™ provided by Mentor Graphics®, Versatile Real-Time Executive (VRTX) provided by Mentor Graphics®, ThreadX™ provided by Express Logic®, FreeRTOS, REX OS provided by Qualcomm®, OKL4 provided by Open Kernel (OK) Labs®, or any other suitable RTOS, such as those discussed herein. In addition, the baseband circuitry 610 includes one or more audio digital signal processor(s) (DSP) 604F. The audio DSP(s) 604F include elements for compression/decompression and echo cancellation and may include other suitable processing elements in other embodiments.

[0137] In some embodiments, each of the processors 604A-604E include respective memory interfaces to send/receive data to/from the memory 604G. The baseband circuitry 610 may further include one or more interfaces to communicatively couple to other circuitries/devices, such as an interface to send/receive data to/from memory external to the baseband circuitry 610; an application circuitry interface to send/receive data to/from the application circuitry 505/555 of Figures 5-6); an RF circuitry interface to send/receive data to/from RF circuitry 606 of Figure 6; a wireless hardware connectivity interface to send/receive data to/from one or more wireless hardware elements (e.g., Near Field Communication (NFC) components, Bluetooth®/ Bluetooth® Low Energy components, Wi-Fi® components, and/or the like); and a power management interface to send/receive power or control signals to/from the PMIC 575.

[0138] In alternate embodiments (which may be combined with the above described embodiments), baseband circuitry 610 comprises one or more digital baseband systems, which are coupled with one another via an interconnect subsystem and to a CPU subsystem, an audio subsystem, and an interface subsystem. The digital baseband subsystems may also be coupled to a digital baseband interface and a mixed-signal baseband subsystem via another interconnect subsystem. Each of the interconnect subsystems may include a bus system, point-to-point connections, network-on-chip (NOC) structures, and/or some other suitable bus or interconnect technology, such as those discussed herein. The audio subsystem may include DSP circuitry, buffer memory, program memory, speech processing accelerator circuitry, data converter circuitry such as analog-to-digital and digital-to-analog converter circuitry, analog circuitry including one or more of amplifiers and filters, and/or other like components. In an aspect of the present disclosure, baseband circuitry 610 may include protocol processing circuitry with one or more instances of control circuitry (not shown) to provide control functions for the digital baseband circuitry and/or radio frequency circuitry (e.g., the radio front end modules 615).

[0139] Although not shown by Figure 6, in some embodiments, the baseband circuitry 610 includes individual processing device(s) to operate one or more wireless communication protocols (e.g., a “multi-protocol baseband processor” or “protocol processing circuitry”) and individual processing device(s) to implement PHY layer functions. In these embodiments, the PHY layer functions include the aforementioned

radio control functions. In these embodiments, the protocol processing circuitry operates or implements various protocol layers/entities of one or more wireless communication protocols. In a first example, the protocol processing circuitry may operate LTE protocol entities and/or 5G/NR protocol entities when the baseband circuitry 610 and/or RF circuitry 606 are part of mmWave communication circuitry or some other suitable cellular communication circuitry. In the first example, the protocol processing circuitry would operate MAC, RLC, PDCP, SDAP, RRC, and NAS functions. In a second example, the protocol processing circuitry may operate one or more IEEE-based protocols when the baseband circuitry 610 and/or RF circuitry 606 are part of a Wi-Fi communication system. In the second example, the protocol processing circuitry would operate Wi-Fi MAC and logical link control (LLC) functions. The protocol processing circuitry may include one or more memory structures (e.g., 604G) to store program code and data for operating the protocol functions, as well as one or more processing cores to execute the program code and perform various operations using the data. The baseband circuitry 610 may also support radio communications for more than one wireless protocol.

[0140] The various hardware elements of the baseband circuitry 610 discussed herein may be implemented, for example, as a solder-down substrate including one or more integrated circuits (ICs), a single packaged IC soldered to a main circuit board or a multi-chip module containing two or more ICs. In one example, the components of the baseband circuitry 610 may be suitably combined in a single chip or chipset, or disposed on a same circuit board. In another example, some or all of the constituent components of the baseband circuitry 610 and RF circuitry 606 may be implemented together such as, for example, a system on a chip (SoC) or System-in-Package (SiP). In another example, some or all of the constituent components of the baseband circuitry 610 may be implemented as a separate SoC that is communicatively coupled with and RF circuitry 606 (or multiple instances of RF circuitry 606). In yet another example, some or all of the constituent components of the baseband circuitry 610 and the application circuitry 505/555 may be implemented together as individual SoCs mounted to a same circuit board (e.g., a “multi-chip package”).

[0141] In some embodiments, the baseband circuitry 610 may provide for communication compatible with one or more radio technologies. For example, in some embodiments, the baseband circuitry 610 may support communication with an E-UTRAN

or other WMAN, a WLAN, a WPAN. Embodiments in which the baseband circuitry 610 is configured to support radio communications of more than one wireless protocol may be referred to as multi-mode baseband circuitry.

[0142] RF circuitry 606 may enable communication with wireless networks using modulated electromagnetic radiation through a non-solid medium. In various embodiments, the RF circuitry 606 may include switches, filters, amplifiers, etc. to facilitate the communication with the wireless network. RF circuitry 606 may include a receive signal path, which may include circuitry to down-convert RF signals received from the FEM circuitry 608 and provide baseband signals to the baseband circuitry 610. RF circuitry 606 may also include a transmit signal path, which may include circuitry to up-convert baseband signals provided by the baseband circuitry 610 and provide RF output signals to the FEM circuitry 608 for transmission.

[0143] In some embodiments, the receive signal path of the RF circuitry 606 may include mixer circuitry 606a, amplifier circuitry 606b and filter circuitry 606c. In some embodiments, the transmit signal path of the RF circuitry 606 may include filter circuitry 606c and mixer circuitry 606a. RF circuitry 606 may also include synthesizer circuitry 606d for synthesizing a frequency for use by the mixer circuitry 606a of the receive signal path and the transmit signal path. In some embodiments, the mixer circuitry 606a of the receive signal path may be configured to down-convert RF signals received from the FEM circuitry 608 based on the synthesized frequency provided by synthesizer circuitry 606d. The amplifier circuitry 606b may be configured to amplify the down-converted signals and the filter circuitry 606c may be a low-pass filter (LPF) or band-pass filter (BPF) configured to remove unwanted signals from the down-converted signals to generate output baseband signals. Output baseband signals may be provided to the baseband circuitry 610 for further processing. In some embodiments, the output baseband signals may be zero-frequency baseband signals, although this is not a requirement. In some embodiments, mixer circuitry 606a of the receive signal path may comprise passive mixers, although the scope of the embodiments is not limited in this respect.

[0144] In some embodiments, the mixer circuitry 606a of the transmit signal path may be configured to up-convert input baseband signals based on the synthesized frequency provided by the synthesizer circuitry 606d to generate RF output signals for the FEM

circuitry 608. The baseband signals may be provided by the baseband circuitry 610 and may be filtered by filter circuitry 606c.

[0145] In some embodiments, the mixer circuitry 606a of the receive signal path and the mixer circuitry 606a of the transmit signal path may include two or more mixers and may be arranged for quadrature downconversion and upconversion, respectively. In some embodiments, the mixer circuitry 606a of the receive signal path and the mixer circuitry 606a of the transmit signal path may include two or more mixers and may be arranged for image rejection (e.g., Hartley image rejection). In some embodiments, the mixer circuitry 606a of the receive signal path and the mixer circuitry 606a of the transmit signal path may be arranged for direct downconversion and direct upconversion, respectively. In some embodiments, the mixer circuitry 606a of the receive signal path and the mixer circuitry 606a of the transmit signal path may be configured for super-heterodyne operation.

[0146] In some embodiments, the output baseband signals and the input baseband signals may be analog baseband signals, although the scope of the embodiments is not limited in this respect. In some alternate embodiments, the output baseband signals and the input baseband signals may be digital baseband signals. In these alternate embodiments, the RF circuitry 606 may include analog-to-digital converter (ADC) and digital-to-analog converter (DAC) circuitry and the baseband circuitry 610 may include a digital baseband interface to communicate with the RF circuitry 606.

[0147] In some dual-mode embodiments, a separate radio IC circuitry may be provided for processing signals for each spectrum, although the scope of the embodiments is not limited in this respect.

[0148] In some embodiments, the synthesizer circuitry 606d may be a fractional-N synthesizer or a fractional N/N+1 synthesizer, although the scope of the embodiments is not limited in this respect as other types of frequency synthesizers may be suitable. For example, synthesizer circuitry 606d may be a delta-sigma synthesizer, a frequency multiplier, or a synthesizer comprising a phase-locked loop with a frequency divider.

[0149] The synthesizer circuitry 606d may be configured to synthesize an output frequency for use by the mixer circuitry 606a of the RF circuitry 606 based on a frequency input and a divider control input. In some embodiments, the synthesizer circuitry 606d may be a fractional N/N+1 synthesizer.

[0150] In some embodiments, frequency input may be provided by a voltage controlled oscillator (VCO), although that is not a requirement. Divider control input may be provided by either the baseband circuitry 610 or the application circuitry 505/555 depending on the desired output frequency. In some embodiments, a divider control input (e.g., N) may be determined from a look-up table based on a channel indicated by the application circuitry 505/555.

[0151] Synthesizer circuitry 606d of the RF circuitry 606 may include a divider, a delay-locked loop (DLL), a multiplexer and a phase accumulator. In some embodiments, the divider may be a dual modulus divider (DMD) and the phase accumulator may be a digital phase accumulator (DPA). In some embodiments, the DMD may be configured to divide the input signal by either N or N+1 (e.g., based on a carry out) to provide a fractional division ratio. In some example embodiments, the DLL may include a set of cascaded, tunable, delay elements, a phase detector, a charge pump and a D-type flip-flop. In these embodiments, the delay elements may be configured to break a VCO period up into Nd equal packets of phase, where Nd is the number of delay elements in the delay line. In this way, the DLL provides negative feedback to help ensure that the total delay through the delay line is one VCO cycle.

[0152] In some embodiments, synthesizer circuitry 606d may be configured to generate a carrier frequency as the output frequency, while in other embodiments, the output frequency may be a multiple of the carrier frequency (e.g., twice the carrier frequency, four times the carrier frequency) and used in conjunction with quadrature generator and divider circuitry to generate multiple signals at the carrier frequency with multiple different phases with respect to each other. In some embodiments, the output frequency may be a LO frequency (fLO). In some embodiments, the RF circuitry 606 may include an IQ/polar converter.

[0153] FEM circuitry 608 may include a receive signal path, which may include circuitry configured to operate on RF signals received from antenna array 611, amplify the received signals and provide the amplified versions of the received signals to the RF circuitry 606 for further processing. FEM circuitry 608 may also include a transmit signal path, which may include circuitry configured to amplify signals for transmission provided by the RF circuitry 606 for transmission by one or more of antenna elements of antenna array 611. In various embodiments, the amplification through the transmit or receive

signal paths may be done solely in the RF circuitry 606, solely in the FEM circuitry 608, or in both the RF circuitry 606 and the FEM circuitry 608.

[0154] In some embodiments, the FEM circuitry 608 may include a TX/RX switch to switch between transmit mode and receive mode operation. The FEM circuitry 608 may include a receive signal path and a transmit signal path. The receive signal path of the FEM circuitry 608 may include an LNA to amplify received RF signals and provide the amplified received RF signals as an output (e.g., to the RF circuitry 606). The transmit signal path of the FEM circuitry 608 may include a power amplifier (PA) to amplify input RF signals (e.g., provided by RF circuitry 606), and one or more filters to generate RF signals for subsequent transmission by one or more antenna elements of the antenna array 611.

[0155] The antenna array 611 comprises one or more antenna elements, each of which is configured convert electrical signals into radio waves to travel through the air and to convert received radio waves into electrical signals. For example, digital baseband signals provided by the baseband circuitry 610 is converted into analog RF signals (e.g., modulated waveform) that will be amplified and transmitted via the antenna elements of the antenna array 611 including one or more antenna elements (not shown). The antenna elements may be omnidirectional, direction, or a combination thereof. The antenna elements may be formed in a multitude of arranges as are known and/or discussed herein. The antenna array 611 may comprise microstrip antennas or printed antennas that are fabricated on the surface of one or more printed circuit boards. The antenna array 611 may be formed in as a patch of metal foil (e.g., a patch antenna) in a variety of shapes, and may be coupled with the RF circuitry 606 and/or FEM circuitry 608 using metal transmission lines or the like.

[0156] Processors of the application circuitry 505/555 and processors of the baseband circuitry 610 may be used to execute elements of one or more instances of a protocol stack. For example, processors of the baseband circuitry 610, alone or in combination, may be used execute Layer 3, Layer 2, or Layer 1 functionality, while processors of the application circuitry 505/555 may utilize data (e.g., packet data) received from these layers and further execute Layer 4 functionality (e.g., TCP and UDP layers). As referred to herein, Layer 3 may comprise a RRC layer, described in further detail below. As referred to herein, Layer 2 may comprise a MAC layer, an RLC layer, and a PDCP layer,

described in further detail below. As referred to herein, Layer 1 may comprise a PHY layer of a UE/RAN node, described in further detail below.

[0157] Figure 7 illustrates various protocol functions that may be implemented in a wireless communication device according to various embodiments. In particular, Figure 7 includes an arrangement 700 showing interconnections between various protocol layers/entities. The following description of Figure 7 is provided for various protocol layers/entities that operate in conjunction with the 5G/NR system standards and LTE system standards, but some or all of the aspects of Figure 7 may be applicable to other wireless communication network systems as well.

[0158] The protocol layers of arrangement 700 may include one or more of PHY 710, MAC 720, RLC 730, PDCP 740, SDAP 747, RRC 755, and NAS layer 757, in addition to other higher layer functions not illustrated. The protocol layers may include one or more service access points (e.g., items 759, 756, 750, 749, 745, 735, 725, and 715 in Figure 7) that may provide communication between two or more protocol layers.

[0159] The PHY 710 may transmit and receive physical layer signals 705 that may be received from or transmitted to one or more other communication devices. The physical layer signals 705 may comprise one or more physical channels, such as those discussed herein. The PHY 710 may further perform link adaptation or adaptive modulation and coding (AMC), power control, cell search (e.g., for initial synchronization and handover purposes), and other measurements used by higher layers, such as the RRC 755. The PHY 710 may still further perform error detection on the transport channels, forward error correction (FEC) coding/decoding of the transport channels, modulation/demodulation of physical channels, interleaving, rate matching, mapping onto physical channels, and MIMO antenna processing. In embodiments, an instance of PHY 710 may process requests from and provide indications to an instance of MAC 720 via one or more PHY-SAP 715. According to some embodiments, requests and indications communicated via PHY-SAP 715 may comprise one or more transport channels.

[0160] Instance(s) of MAC 720 may process requests from, and provide indications to, an instance of RLC 730 via one or more MAC-SAPs 725. These requests and indications communicated via the MAC-SAP 725 may comprise one or more logical channels. The MAC 720 may perform mapping between the logical channels and transport channels, multiplexing of MAC SDUs from one or more logical channels onto TBs to be delivered

to PHY 710 via the transport channels, de-multiplexing MAC SDUs to one or more logical channels from TBs delivered from the PHY 710 via transport channels, multiplexing MAC SDUs onto TBs, scheduling information reporting, error correction through HARQ, and logical channel prioritization.

[0161] Instance(s) of RLC 730 may process requests from and provide indications to an instance of PDCP 740 via one or more radio link control service access points (RLC-SAP) 735. These requests and indications communicated via RLC-SAP 735 may comprise one or more RLC channels. The RLC 730 may operate in a plurality of modes of operation, including: Transparent Mode (TM), Unacknowledged Mode (UM), and Acknowledged Mode (AM). The RLC 730 may execute transfer of upper layer protocol data units (PDUs), error correction through automatic repeat request (ARQ) for AM data transfers, and concatenation, segmentation and reassembly of RLC SDUs for UM and AM data transfers. The RLC 730 may also execute re-segmentation of RLC data PDUs for AM data transfers, reorder RLC data PDUs for UM and AM data transfers, detect duplicate data for UM and AM data transfers, discard RLC SDUs for UM and AM data transfers, detect protocol errors for AM data transfers, and perform RLC re-establishment.

[0162] Instance(s) of PDCP 740 may process requests from and provide indications to instance(s) of RRC 755 and/or instance(s) of SDAP 747 via one or more packet data convergence protocol service access points (PDCP-SAP) 745. These requests and indications communicated via PDCP-SAP 745 may comprise one or more radio bearers. The PDCP 740 may execute header compression and decompression of IP data, maintain PDCP Sequence Numbers (SNs), perform in-sequence delivery of upper layer PDUs at re-establishment of lower layers, eliminate duplicates of lower layer SDUs at re-establishment of lower layers for radio bearers mapped on RLC AM, cipher and decipher control plane data, perform integrity protection and integrity verification of control plane data, control timer-based discard of data, and perform security operations (e.g., ciphering, deciphering, integrity protection, integrity verification, etc.).

[0163] Instance(s) of SDAP 747 may process requests from and provide indications to one or more higher layer protocol entities via one or more SDAP-SAP 749. These requests and indications communicated via SDAP-SAP 749 may comprise one or more QoS flows. The SDAP 747 may map QoS flows to DRBs, and vice versa, and may also mark QFIs in DL and UL packets. A single SDAP entity 747 may be configured for an

individual PDU session. In the UL direction, the NG-RAN 310 may control the mapping of QoS Flows to DRB(s) in two different ways, reflective mapping or explicit mapping. For reflective mapping, the SDAP 747 of a UE 301 may monitor the QFIs of the DL packets for each DRB, and may apply the same mapping for packets flowing in the UL direction. For a DRB, the SDAP 747 of the UE 301 may map the UL packets belonging to the QoS flows(s) corresponding to the QoS flow ID(s) and PDU session observed in the DL packets for that DRB. To enable reflective mapping, the NG-RAN 410 may mark DL packets over the Uu interface with a QoS flow ID. The explicit mapping may involve the RRC 755 configuring the SDAP 747 with an explicit QoS flow to DRB mapping rule, which may be stored and followed by the SDAP 747. In embodiments, the SDAP 747 may only be used in NR implementations and may not be used in LTE implementations.

[0164] The RRC 755 may configure, via one or more management service access points (M-SAP), aspects of one or more protocol layers, which may include one or more instances of PHY 710, MAC 720, RLC 730, PDCP 740 and SDAP 747. In embodiments, an instance of RRC 755 may process requests from and provide indications to one or more NAS entities 757 via one or more RRC-SAPs 756. The main services and functions of the RRC 755 may include broadcast of system information (e.g., included in MIBs or SIBs related to the NAS), broadcast of system information related to the access stratum (AS), paging, establishment, maintenance and release of an RRC connection between the UE 301 and RAN 310 (e.g., RRC connection paging, RRC connection establishment, RRC connection modification, and RRC connection release), establishment, configuration, maintenance and release of point to point Radio Bearers, security functions including key management, inter-RAT mobility, and measurement configuration for UE measurement reporting. The MIBs and SIBs may comprise one or more IEs, which may each comprise individual data fields or data structures.

[0165] The NAS 757 may form the highest stratum of the control plane between the UE 301 and the AMF 421. The NAS 757 may support the mobility of the UEs 301 and the session management procedures to establish and maintain IP connectivity between the UE 301 and a P-GW in LTE systems.

[0166] According to various embodiments, one or more protocol entities of arrangement 700 may be implemented in UEs 301, RAN nodes 311, AMF 421 in NR implementations or MME 411 in LTE implementations, UPF 402 in NR implementations or S-GW 417

and P-GW 418 in LTE implementations, or the like to be used for control plane or user plane communications protocol stack between the aforementioned devices. In such embodiments, one or more protocol entities that may be implemented in one or more of UE 301, gNB 311, AMF 421, etc. may communicate with a respective peer protocol entity that may be implemented in or on another device using the services of respective lower layer protocol entities to perform such communication. In some embodiments, a gNB-CU of the gNB 311 may host the RRC 755, SDAP 747, and PDCP 740 of the gNB that controls the operation of one or more gNB-DUs, and the gNB-DUs of the gNB 311 may each host the RLC 730, MAC 720, and PHY 710 of the gNB 311.

[0167] In a first example, a control plane protocol stack may comprise, in order from highest layer to lowest layer, NAS 757, RRC 755, PDCP 740, RLC 730, MAC 720, and PHY 710. In this example, upper layers 760 may be built on top of the NAS 757, which includes an IP layer 761, an SCTP 762, and an application layer signaling protocol (AP) 763.

[0168] In NR implementations, the AP 763 may be an NG application protocol layer (NGAP or NG-AP) 763 for the NG interface 313 defined between the NG-RAN node 311 and the AMF 421, or the AP 763 may be an Xn application protocol layer (XnAP or Xn-AP) 763 for the Xn interface 312 that is defined between two or more RAN nodes 311.

[0169] The NG-AP 763 may support the functions of the NG interface 313 and may comprise Elementary Procedures (EPs). An NG-AP EP may be a unit of interaction between the NG-RAN node 311 and the AMF 421. The NG-AP 763 services may comprise two groups: UE-associated services (e.g., services related to a UE 301, 302) and non-UE-associated services (e.g., services related to the whole NG interface instance between the NG-RAN node 311 and AMF 421). These services may include functions including, but not limited to: a paging function for the sending of paging requests to NG-RAN nodes 311 involved in a particular paging area; a UE context management function for allowing the AMF 421 to establish, modify, and/or release a UE context in the AMF 421 and the NG-RAN node 311; a mobility function for UEs 301 in ECM-CONNECTED mode for intra-system HOs to support mobility within NG-RAN and inter-system HOs to support mobility from/to EPS systems; a NAS Signaling Transport function for transporting or rerouting NAS messages between UE 301 and AMF 421; a NAS node selection function for determining an association between the AMF 421 and the UE 301;

NG interface management function(s) for setting up the NG interface and monitoring for errors over the NG interface; a warning message transmission function for providing means to transfer warning messages via NG interface or cancel ongoing broadcast of warning messages; a Configuration Transfer function for requesting and transferring of RAN configuration information (e.g., SON information, performance measurement (PM) data, etc.) between two RAN nodes 311 via CN 320; and/or other like functions.

[0170] The XnAP 763 may support the functions of the Xn interface 312 and may comprise XnAP basic mobility procedures and XnAP global procedures. The XnAP basic mobility procedures may comprise procedures used to handle UE mobility within the NG RAN 311 (or E-UTRAN 410), such as handover preparation and cancellation procedures, SN Status Transfer procedures, UE context retrieval and UE context release procedures, RAN paging procedures, dual connectivity related procedures, and the like. The XnAP global procedures may comprise procedures that are not related to a specific UE 301, such as Xn interface setup and reset procedures, NG-RAN update procedures, cell activation procedures, and the like.

[0171] In LTE implementations, the AP 763 may be an S1 Application Protocol layer (S1-AP) 763 for the S1 interface 313 defined between an E-UTRAN node 311 and an MME, or the AP 763 may be an X2 application protocol layer (X2AP or X2-AP) 763 for the X2 interface 312 that is defined between two or more E-UTRAN nodes 311.

[0172] The S1 Application Protocol layer (S1-AP) 763 may support the functions of the S1 interface, and similar to the NG-AP discussed previously, the S1-AP may comprise S1-AP EPs. An S1-AP EP may be a unit of interaction between the E-UTRAN node 311 and an MME 411within an LTE CN 320. The S1-AP 763 services may comprise two groups: UE-associated services and non UE-associated services. These services perform functions including, but not limited to: E-UTRAN Radio Access Bearer (E-RAB) management, UE capability indication, mobility, NAS signaling transport, RAN Information Management (RIM), and configuration transfer.

[0173] The X2AP 763 may support the functions of the X2 interface 312 and may comprise X2AP basic mobility procedures and X2AP global procedures. The X2AP basic mobility procedures may comprise procedures used to handle UE mobility within the E-UTRAN 320, such as handover preparation and cancellation procedures, SN Status Transfer procedures, UE context retrieval and UE context release procedures, RAN

paging procedures, dual connectivity related procedures, and the like. The X2AP global procedures may comprise procedures that are not related to a specific UE 301, such as X2 interface setup and reset procedures, load indication procedures, error indication procedures, cell activation procedures, and the like.

[0174] The SCTP layer (alternatively referred to as the SCTP/IP layer) 762 may provide guaranteed delivery of application layer messages (e.g., NGAP or XnAP messages in NR implementations, or S1-AP or X2AP messages in LTE implementations). The SCTP 762 may ensure reliable delivery of signaling messages between the RAN node 311 and the AMF 421/MME 411 based, in part, on the IP protocol, supported by the IP 761. The Internet Protocol layer (IP) 761 may be used to perform packet addressing and routing functionality. In some implementations the IP layer 761 may use point-to-point transmission to deliver and convey PDUs. In this regard, the RAN node 311 may comprise L2 and L1 layer communication links (e.g., wired or wireless) with the MME/AMF to exchange information.

[0175] In a second example, a user plane protocol stack may comprise, in order from highest layer to lowest layer, SDAP 747, PDCP 740, RLC 730, MAC 720, and PHY 710. The user plane protocol stack may be used for communication between the UE 301, the RAN node 311, and UPF 402 in NR implementations or an S-GW 417 and P-GW 418 in LTE implementations. In this example, upper layers 751 may be built on top of the SDAP 747, and may include a user datagram protocol (UDP) and IP security layer (UDP/IP) 752, a General Packet Radio Service (GPRS) Tunneling Protocol for the user plane layer (GTP-U) 753, and a User Plane PDU layer (UP PDU) 763.

[0176] The transport network layer 754 (also referred to as a “transport layer”) may be built on IP transport, and the GTP-U 753 may be used on top of the UDP/IP layer 752 (comprising a UDP layer and IP layer) to carry user plane PDUs (UP-PDUs). The IP layer (also referred to as the “Internet layer”) may be used to perform packet addressing and routing functionality. The IP layer may assign IP addresses to user data packets in any of IPv4, IPv6, or PPP formats, for example.

[0177] The GTP-U 753 may be used for carrying user data within the GPRS core network and between the radio access network and the core network. The user data transported can be packets in any of IPv4, IPv6, or PPP formats, for example. The UDP/IP 752 may provide checksums for data integrity, port numbers for addressing different functions at

the source and destination, and encryption and authentication on the selected data flows. The RAN node 311 and the S-GW 417 may utilize an S1-U interface to exchange user plane data via a protocol stack comprising an L1 layer (e.g., PHY 710), an L2 layer (e.g., MAC 720, RLC 730, PDCP 740, and/or SDAP 747), the UDP/IP layer 752, and the GTP-U 753. The S-GW 417 and the P-GW 418 may utilize an S5/S8a interface to exchange user plane data via a protocol stack comprising an L1 layer, an L2 layer, the UDP/IP layer 752, and the GTP-U 753. As discussed previously, NAS protocols may support the mobility of the UE 301 and the session management procedures to establish and maintain IP connectivity between the UE 301 and the P-GW 418.

[0178] Moreover, although not shown by Figure 7, an application layer may be present above the AP 763 and/or the transport network layer 754. The application layer may be a layer in which a user of the UE 301, RAN node 311, or other network element interacts with software applications being executed, for example, by application circuitry 505 or application circuitry 555, respectively. The application layer may also provide one or more interfaces for software applications to interact with communications systems of the UE 301 or RAN node 311, such as the baseband circuitry 610. In some implementations the IP layer and/or the application layer may provide the same or similar functionality as layers 5-7, or portions thereof, of the Open Systems Interconnection (OSI) model (e.g., OSI Layer 7 – the application layer, OSI Layer 6 – the presentation layer, and OSI Layer 5 – the session layer).

[0179] Figure 8 is a block diagram illustrating components, according to some example embodiments, able to read instructions from a machine-readable or computer-readable medium (e.g., a non-transitory machine-readable storage medium) and perform any one or more of the methodologies discussed herein. Specifically, Figure 8 shows a diagrammatic representation of hardware resources 800 including one or more processors (or processor cores) 810, one or more memory/storage devices 820, and one or more communication resources 830, each of which may be communicatively coupled via a bus 840. For embodiments where node virtualization (e.g., NFV) is utilized, a hypervisor 802 may be executed to provide an execution environment for one or more network slices/sub-slices to utilize the hardware resources 800.

[0180] The processors 810 may include, for example, a processor 812 and a processor 814. The processor(s) 810 may be, for example, a central processing unit (CPU), a

reduced instruction set computing (RISC) processor, a complex instruction set computing (CISC) processor, a graphics processing unit (GPU), a DSP such as a baseband processor, an ASIC, an FPGA, a radio-frequency integrated circuit (RFIC), another processor (including those discussed herein), or any suitable combination thereof.

[0181] The memory/storage devices 820 may include main memory, disk storage, or any suitable combination thereof. The memory/storage devices 820 may include, but are not limited to, any type of volatile or nonvolatile memory such as dynamic random access memory (DRAM), static random access memory (SRAM), erasable programmable read-only memory (EPROM), electrically erasable programmable read-only memory (EEPROM), Flash memory, solid-state storage, etc.

[0182] The communication resources 830 may include interconnection or network interface components or other suitable devices to communicate with one or more peripheral devices 804 or one or more databases 806 via a network 808. For example, the communication resources 830 may include wired communication components (e.g., for coupling via USB), cellular communication components, NFC components, Bluetooth® (or Bluetooth® Low Energy) components, Wi-Fi® components, and other communication components.

[0183] Instructions 850 may comprise software, a program, an application, an applet, an app, or other executable code for causing at least any of the processors 810 to perform any one or more of the methodologies discussed herein. The instructions 850 may reside, completely or partially, within at least one of the processors 810 (e.g., within the processor's cache memory), the memory/storage devices 820, or any suitable combination thereof. Furthermore, any portion of the instructions 850 may be transferred to the hardware resources 800 from any combination of the peripheral devices 804 or the databases 806. Accordingly, the memory of processors 810, the memory/storage devices 820, the peripheral devices 804, and the databases 806 are examples of computer-readable and machine-readable media.

[0184] For one or more embodiments, at least one of the components set forth in one or more of the preceding figures may be configured to perform one or more operations, techniques, processes, and/or methods as set forth in the example section below. For example, the baseband circuitry as described above in connection with one or more of the preceding figures may be configured to operate in accordance with one or more of the

examples set forth below. For another example, circuitry associated with a UE, base station, network element, etc. as described above in connection with one or more of the preceding figures may be configured to operate in accordance with one or more of the examples set forth below in the example section.

[0185] Figure 9 illustrates a flowchart 900 that describes an apparatus, such as an apparatus in an Integrated Access and Backhaul (IAB) network, for random access channel (RACH) resource coordination. For example, the apparatus can be an IAB node such as IAB 101 of Figure 1. According to some examples, the IAB node can include, but not limited to, a base station, radio head, RAN node such as the RAN nodes 311 and/or AP 306, for random access channel (RACH) resource coordination. In embodiments, the flowchart 900 can be performed or controlled by a processor or processor circuitry in the UE described in the various embodiments herein, including the processor shown in Figure 8, and/or the application circuitry 505 and/or the baseband circuitry 510 shown Figure 5A.

[0186] At 902, a random access channel (RACH) resource configuration for communicating with a parent apparatus and a child apparatus is received. For example, an apparatus in an Integrated Access and Backhaul (IAB) network (e.g., IAB node 101 of Figure. 1) receives the RACH resource configuration. In some embodiments, the parent apparatus can include a parent IAB node 103 of Figure 1 and/or an IAB donor. In some embodiments, the child apparatus can include a child IAB node 105 and/or a child UE 107, as illustrated in Figure 1.

[0187] At 904, a first RACH resource is determined for communicating with the parent apparatus. For example, IAB node 101 can determine, based on the received RACH resource configuration, the first RACH resource for communicating, in a half-duplex mode, with the parent apparatus (e.g., parent IAB node 103 and/or IAB donor).

[0188] At 906, a second RACH resource is determined for communicating with the child apparatus. For example, IAB node 101 can determine, based on the received RACH resource configuration, the second RACH resource for communicating, in the half-duplex mode, with the child apparatus. In some embodiments, the second RACH resource can be orthogonal to the first RACH resource.

EXAMPLES

[0189] Example 1 may include the method comprising performing RACH resource coordination for adjacent hops in IAB.

[0190] Example 2 may include the method of example 1 or some other example herein, wherein performing the RACH resource coordination comprises: creating one or more new RACH configurations.

[0191] Example 3 may include the method of example 2 or some other example herein, wherein creating one or more new RACH configurations comprises: adding new entries in a current RACH configuration table.

[0192] Example 4 may include the method of example 2 or some other example herein, wherein creating one or more new RACH configurations comprises: creating one or more new RACH configuration tables.

[0193] Example 5 may include the method of example 1 or some other example herein, wherein performing the RACH resource coordination comprises adding additional indications for valid/invalid RACH resources with current RACH configurations.

[0194] Example 6 may include the method of example 5 or some other example herein, wherein adding additional indications comprises adding an implicit indication for an IAB node to coordinate for parent backhaul and child links.

[0195] Example 7 may include the method of example 5 or some other example herein, wherein adding additional indications comprises adding an explicit indication for valid/invalid RACH resources via SIB1.

[0196] Example 8 may include the method of example 5 or some other example herein, wherein adding additional indications comprises adding an explicit indication for valid/invalid RACH resources via dedicated RRC signaling.

[0197] Example 9 may include the method of example 5 or some other example herein, wherein adding additional indications comprises adding an explicit indication for valid/invalid RACH resources via GC-PDCCH.

[0198] Example 10 may include the method of example 5 or some other example herein, wherein adding additional indications comprises adding an explicit indication for valid/invalid RACH resources via MAC-CE.

[0199] Example Z01 may include an apparatus comprising means to perform one or more elements of a method described in or related to any of examples 1-10, or any other method or process described herein.

[0200] Example Z02 may include one or more non-transitory computer-readable media comprising instructions to cause an electronic device, upon execution of the instructions by one or more processors of the electronic device, to perform one or more elements of a method described in or related to any of examples 1-10, or any other method or process described herein.

[0201] Example Z03 may include an apparatus comprising logic, modules, or circuitry to perform one or more elements of a method described in or related to any of examples 1-10, or any other method or process described herein.

[0202] Example Z04 may include a method, technique, or process as described in or related to any of examples 1-10, or portions or parts thereof.

[0203] Example Z05 may include an apparatus comprising: one or more processors and one or more computer-readable media comprising instructions that, when executed by the one or more processors, cause the one or more processors to perform the method, techniques, or process as described in or related to any of examples 1-10, or portions thereof.

[0204] Example Z06 may include a signal as described in or related to any of examples 1-10, or portions or parts thereof.

[0205] Example Z07 may include a signal in a wireless network as shown and described herein.

[0206] Example Z08 may include a method of communicating in a wireless network as shown and described herein.

[0207] Example Z09 may include a system for providing wireless communication as shown and described herein.

[0208] Example Z10 may include a device for providing wireless communication as shown and described herein.

[0209] Any of the above-described examples may be combined with any other example (or combination of examples), unless explicitly stated otherwise. The foregoing description of one or more implementations provides illustration and description, but is not intended to be exhaustive or to limit the scope of embodiments to the precise form

disclosed. Modifications and variations are possible in light of the above teachings or may be acquired from practice of various embodiments.

Abbreviations

[0210] For the purposes of the present document, the following abbreviations may apply to the examples and embodiments discussed herein, but are not meant to be limiting.

[0211]	3GPP	Third Generation Partnership Project
[0212]	4G	Fourth Generation
[0213]	5G	Fifth Generation
[0214]	5GC	5G Core network
[0215]	ACK	Acknowledgement
[0216]	AF	Application Function
[0217]	AM	Acknowledged Mode
[0218]	AMBR	Aggregate Maximum Bit Rate
[0219]	AMF	Access and Mobility Management Function
[0220]	AN	Access Network
[0221]	ANR	Automatic Neighbour Relation
[0222]	AP	Application Protocol, Antenna Port, Access Point
[0223]	API	Application Programming Interface
[0224]	APN	Access Point Name
[0225]	ARP	Allocation and Retention Priority
[0226]	ARQ	Automatic Repeat Request
[0227]	AS	Access Stratum
[0228]	ASN.1	Abstract Syntax Notation One
[0229]	AUSF	Authentication Server Function
[0230]	AWGN	Additive White Gaussian Noise
[0231]	BCH	Broadcast Channel
[0232]	BER	Bit Error Ratio
[0233]	BFD	Beam Failure Detection
[0234]	BLER	Block Error Rate
[0235]	BPSK	Binary Phase Shift Keying
[0236]	BRAS	Broadband Remote Access Server
[0237]	BSS	Business Support System

[0238]	BS	Base Station
[0239]	BSR	Buffer Status Report
[0240]	BW	Bandwidth
[0241]	BWP	Bandwidth Part
[0242]	C-RNTI	Cell Radio Network Temporary Identity
[0243]	CA	Carrier Aggregation, Certification Authority
[0244]	CAPEX	CAPital EXpenditure
[0245]	CBRA	Contention Based Random Access
[0246]	CC	Component Carrier, Country Code, Cryptographic Checksum
[0247]	CCA	Clear Channel Assessment
[0248]	CCE	Control Channel Element
[0249]	CCCH	Common Control Channel
[0250]	CE	Coverage Enhancement
[0251]	CDM	Content Delivery Network
[0252]	CDMA	Code-Division Multiple Access
[0253]	CFRA	Contention Free Random Access
[0254]	CG	Cell Group
[0255]	CI	Cell Identity
[0256]	CID	Cell-ID (e.g., positioning method)
[0257]	CIM	Common Information Model
[0258]	CIR	Carrier to Interference Ratio
[0259]	CK	Cipher Key
[0260]	CM	Connection Management, Conditional Mandatory
[0261]	CMAS	Commercial Mobile Alert Service
[0262]	CMD	Command
[0263]	CMS	Cloud Management System
[0264]	CO	Conditional Optional
[0265]	CoMP	Coordinated Multi-Point
[0266]	CORESET	Control Resource Set
[0267]	COTS	Commercial Off-The-Shelf
[0268]	CP	Control Plane, Cyclic Prefix, Connection Point
[0269]	CPD	Connection Point Descriptor

[0270]	CPE	Customer Premise Equipment
[0271]	CPICH	Common Pilot Channel
[0272]	CQI	Channel Quality Indicator
[0273]	CPU	CSI processing unit, Central Processing Unit
[0274]	C/R	Command/Response field bit
[0275]	CRAN	Cloud Radio Access Network, Cloud RAN
[0276]	CRB	Common Resource Block
[0277]	CRC	Cyclic Redundancy Check
[0278]	CRI	Channel-State Information Resource Indicator, CSI-RS Resource Indicator
[0279]	C-RNTI	Cell RNTI
[0280]	CS	Circuit Switched
[0281]	CSAR	Cloud Service Archive
[0282]	CSI	Channel-State Information
[0283]	CSI-IM	CSI Interference Measurement
[0284]	CSI-RS	CSI Reference Signal
[0285]	CSI-RSRP	CSI reference signal received power
[0286]	CSI-RSRQ	CSI reference signal received quality
[0287]	CSI-SINR	CSI signal-to-noise and interference ratio
[0288]	CSMA	Carrier Sense Multiple Access
[0289]	CSMA/CA	CSMA with collision avoidance
[0290]	CSS	Common Search Space, Cell-specific Search Space
[0291]	CTS	Clear-to-Send
[0292]	CW	Codeword
[0293]	CWS	Contention Window Size
[0294]	D2D	Device-to-Device
[0295]	DC	Dual Connectivity, Direct Current
[0296]	DCI	Downlink Control Information
[0297]	DF	Deployment Flavour
[0298]	DL	Downlink
[0299]	DMTF	Distributed Management Task Force
[0300]	DPDK	Data Plane Development Kit

[0301]	DM-RS, DMRS	Demodulation Reference Signal
[0302]	DN	Data network
[0303]	DRB	Data Radio Bearer
[0304]	DRS	Discovery Reference Signal
[0305]	DRX	Discontinuous Reception
[0306]	DSL	Domain Specific Language. Digital Subscriber Line
[0307]	DSLAM	DSL Access Multiplexer
[0308]	DwPTS	Downlink Pilot Time Slot
[0309]	E-LAN	Ethernet Local Area Network
[0310]	E2E	End-to-End
[0311]	ECCA	extended clear channel assessment, extended CCA
[0312]	ECCE	Enhanced Control Channel Element, Enhanced CCE
[0313]	ED	Energy Detection
[0314]	EDGE	Enhanced Datarates for GSM Evolution (GSM Evolution)
[0315]	EGMF	Exposure Governance Management Function
[0316]	EGPRS	Enhanced GPRS
[0317]	EIR	Equipment Identity Register
[0318]	eLAA	enhanced Licensed Assisted Access, enhanced LAA
[0319]	EM	Element Manager
[0320]	eMBB	Enhanced Mobile Broadband
[0321]	EMS	Element Management System
[0322]	eNB	evolved NodeB, E-UTRAN Node B
[0323]	EN-DC	E-UTRA-NR Dual Connectivity
[0324]	EPC	Evolved Packet Core
[0325]	EPDCCH	enhanced PDCCH, enhanced Physical Downlink Control Cannel
[0326]	EPRE	Energy per resource element
[0327]	EPS	Evolved Packet System
[0328]	EREG	enhanced REG, enhanced resource element groups
[0329]	ETSI	European Telecommunications Standards Institute
[0330]	ETWS	Earthquake and Tsunami Warning System
[0331]	eUICC	embedded UICC, embedded Universal Integrated Circuit Card
[0332]	E-UTRA	Evolved UTRA

[0333]	E-UTRAN	Evolved UTRAN
[0334]	EV2X	Enhanced V2X
[0335]	F1AP	F1 Application Protocol
[0336]	F1-C	F1 Control plane interface
[0337]	F1-U	F1 User plane interface
[0338]	FACCH	Fast Associated Control CHannel
[0339]	FACCH/F	Fast Associated Control Channel/Full rate
[0340]	FACCH/H	Fast Associated Control Channel/Half rate
[0341]	FACH	Forward Access Channel
[0342]	FAUSCH	Fast Uplink Signalling Channel
[0343]	FB	Functional Block
[0344]	FBI	Feedback Information
[0345]	FCC	Federal Communications Commission
[0346]	FCCH	Frequency Correction CHannel
[0347]	FDD	Frequency Division Duplex
[0348]	FDM	Frequency Division Multiplex
[0349]	FDMA	Frequency Division Multiple Access
[0350]	FE	Front End
[0351]	FEC	Forward Error Correction
[0352]	FFS	For Further Study
[0353]	FFT	Fast Fourier Transformation
[0354]	feLAA	further enhanced Licensed Assisted Access, further enhanced LAA
[0355]	FN	Frame Number
[0356]	FPGA	Field-Programmable Gate Array
[0357]	FR	Frequency Range
[0358]	G-RNTI	GERAN Radio Network Temporary Identity
[0359]	GERAN	GSM EDGE RAN, GSM EDGE Radio Access Network
[0360]	GGSN	Gateway GPRS Support Node
[0361]	GLONASS	GLObal'naya NAvigatsionnaya Sputnikovaya Sistema (Engl.: Global Navigation Satellite System)
[0362]	gNB	Next Generation NodeB

[0363]	gNB-CU	gNB-centralized unit, Next Generation NodeB centralized unit
[0364]	gNB-DU	gNB-distributed unit, Next Generation NodeB distributed unit
[0365]	GNSS	Global Navigation Satellite System
[0366]	GPRS	General Packet Radio Service
[0367]	GSM	Global System for Mobile Communications, Groupe Spécial Mobile
[0368]	GTP	GPRS Tunneling Protocol
[0369]	GTP-U	GPRS Tunnelling Protocol for User Plane
[0370]	GTS	Go To Sleep Signal (related to WUS)
[0371]	GUMMEI	Globally Unique MME Identifier
[0372]	GUTI	Globally Unique Temporary UE Identity
[0373]	HARQ	Hybrid ARQ, Hybrid Automatic Repeat Request
[0374]	HANDO, HO	Handover
[0375]	HFN	HyperFrame Number
[0376]	HHO	Hard Handover
[0377]	HLR	Home Location Register
[0378]	HN	Home Network
[0379]	HO	Handover
[0380]	HPLMN	Home Public Land Mobile Network
[0381]	HSDPA	High Speed Downlink Packet Access
[0382]	HSN	Hopping Sequence Number
[0383]	HSPA	High Speed Packet Access
[0384]	HSS	Home Subscriber Server
[0385]	HSUPA	High Speed Uplink Packet Access
[0386]	HTTP	Hyper Text Transfer Protocol
[0387]	HTTPS	Hyper Text Transfer Protocol Secure (https is http/1.1 over SSL, i.e. port 443)
[0388]	I-Block	Information Block
[0389]	ICCID	Integrated Circuit Card Identification
[0390]	ICIC	Inter-Cell Interference Coordination
[0391]	ID	Identity, identifier
[0392]	disclosureT	Inverse Discrete Fourier Transform

[0393]	IE	Information element
[0394]	IBE	In-Band Emission
[0395]	IEEE	Institute of Electrical and Electronics Engineers
[0396]	IEI	Information Element Identifier
[0397]	IEIDL	Information Element Identifier Data Length
[0398]	IETF	Internet Engineering Task Force
[0399]	IF	Infrastructure
[0400]	IM	Interference Measurement, Intermodulation, IP Multimedia
[0401]	IMC	IMS Credentials
[0402]	IMEI	International Mobile Equipment Identity
[0403]	IMGI	International mobile group identity
[0404]	IMPI	IP Multimedia Private Identity
[0405]	IMPU	IP Multimedia PUblic identity
[0406]	IMS	IP Multimedia Subsystem
[0407]	IMSI	International Mobile Subscriber Identity
[0408]	IoT	Internet of Things
[0409]	IP	Internet Protocol
[0410]	Ipsec	IP Security, Internet Protocol Security
[0411]	IP-CAN	IP-Connectivity Access Network
[0412]	IP-M	IP Multicast
[0413]	IPv4	Internet Protocol Version 4
[0414]	IPv6	Internet Protocol Version 6
[0415]	IR	Infrared
[0416]	IS	In Sync
[0417]	IRP	Integration Reference Point
[0418]	ISDN	Integrated Services Digital Network
[0419]	ISIM	IM Services Identity Module
[0420]	ISO	International Organisation for Standardisation
[0421]	ISP	Internet Service Provider
[0422]	IWF	Interworking-Function
[0423]	I-WLAN	Interworking WLAN

[0424]	K	Constraint length of the convolutional code, USIM Individual key
[0425]	kB	Kilobyte (1000 bytes)
[0426]	kbps	kilo-bits per second
[0427]	Kc	Ciphering key
[0428]	Ki	Individual subscriber authentication key
[0429]	KPI	Key Performance Indicator
[0430]	KQI	Key Quality Indicator
[0431]	KSI	Key Set Identifier
[0432]	ksps	kilo-symbols per second
[0433]	KVM	Kernel Virtual Machine
[0434]	L1	Layer 1 (physical layer)
[0435]	L1-RSRP	Layer 1 reference signal received power
[0436]	L2	Layer 2 (data link layer)
[0437]	L3	Layer 3 (network layer)
[0438]	LAA	Licensed Assisted Access
[0439]	LAN	Local Area Network
[0440]	LBT	Listen Before Talk
[0441]	LCM	LifeCycle Management
[0442]	LCR	Low Chip Rate
[0443]	LCS	Location Services
[0444]	LCID	Logical Channel ID
[0445]	LI	Layer Indicator
[0446]	LLC	Logical Link Control, Low Layer Compatibility
[0447]	LPLMN	Local PLMN
[0448]	LPP	LTE Positioning Protocol
[0449]	LSB	Least Significant Bit
[0450]	LTE	Long Term Evolution
[0451]	LWA	LTE-WLAN aggregation
[0452]	LWIP	LTE/WLAN Radio Level Integration with IPsec Tunnel
[0453]	LTE	Long Term Evolution
[0454]	M2M	Machine-to-Machine

[0455]	MAC	Medium Access Control (protocol layering context)
[0456]	MAC	Message authentication code (security/encryption context)
[0457]	MAC-A	MAC used for authentication and key agreement (TSG T WG3 context)
[0458]	MAC-I	MAC used for data integrity of signalling messages (TSG T WG3 context)
[0459]	MANO	Management and Orchestration
[0460]	MBMS	Multimedia Broadcast and Multicast Service
[0461]	MBSFN	Multimedia Broadcast multicast service Single Frequency Network
[0462]	MCC	Mobile Country Code
[0463]	MCG	Master Cell Group
[0464]	MCOT	Maximum Channel Occupancy Time
[0465]	MCS	Modulation and coding scheme
[0466]	MDAF	Management Data Analytics Function
[0467]	MDAS	Management Data Analytics Service
[0468]	MDT	Minimization of Drive Tests
[0469]	ME	Mobile Equipment
[0470]	MeNB	master eNB
[0471]	MER	Message Error Ratio
[0472]	MGL	Measurement Gap Length
[0473]	MGRP	Measurement Gap Repetition Period
[0474]	MIB	Master Information Block, Management Information Base
[0475]	MIMO	Multiple Input Multiple Output
[0476]	MLC	Mobile Location Centre
[0477]	MM	Mobility Management
[0478]	MME	Mobility Management Entity
[0479]	MN	Master Node
[0480]	MO	Measurement Object, Mobile Originated
[0481]	MPBCH	MTC Physical Broadcast CHannel
[0482]	MPDCCH	MTC Physical Downlink Control CHannel
[0483]	MPDSCH	MTC Physical Downlink Shared CHannel

[0484]	MPRACH	MTC Physical Random Access CHannel
[0485]	MPUSCH	MTC Physical Uplink Shared Channel
[0486]	MPLS	MultiProtocol Label Switching
[0487]	MS	Mobile Station
[0488]	MSB	Most Significant Bit
[0489]	MSC	Mobile Switching Centre
[0490]	MSI	Minimum System Information, MCH Scheduling Information
[0491]	MSID	Mobile Station Identifier
[0492]	MSIN	Mobile Station Identification Number
[0493]	MSISDN	Mobile Subscriber ISDN Number
[0494]	MT	Mobile Terminated, Mobile Termination
[0495]	MTC	Machine-Type Communications
[0496]	mMTC	massive MTC, massive Machine-Type Communications
[0497]	MU-MIMO	Multi User MIMO
[0498]	MWUS	MTC wake-up signal, MTC WUS
[0499]	NACK	Negative Acknowledgement
[0500]	NAI	Network Access Identifier
[0501]	NAS	Non-Access Stratum, Non-Access Stratum layer
[0502]	NCT	Network Connectivity Topology
[0503]	NEC	Network Capability Exposure
[0504]	NE-DC	NR-E-UTRA Dual Connectivity
[0505]	NEF	Network Exposure Function
[0506]	NF	Network Function
[0507]	NFP	Network Forwarding Path
[0508]	NFPD	Network Forwarding Path Descriptor
[0509]	NFV	Network Functions Virtualization
[0510]	NFVI	NFV Infrastructure
[0511]	NFVO	NFV Orchestrator
[0512]	NG	Next Generation, Next Gen
[0513]	NGEN-DC	NG-RAN E-UTRA-NR Dual Connectivity
[0514]	NM	Network Manager
[0515]	NMS	Network Management System

[0516]	N-PoP	Network Point of Presence
[0517]	NMIB, N-MIB	Narrowband MIB
[0518]	NPBCH	Narrowband Physical Broadcast CHannel
[0519]	NPDCCH	Narrowband Physical Downlink Control CHannel
[0520]	NPDSCH	Narrowband Physical Downlink Shared CHannel
[0521]	NPRACH	Narrowband Physical Random Access CHannel
[0522]	NPUSCH	Narrowband Physical Uplink Shared CHannel
[0523]	NPSS	Narrowband Primary Synchronization Signal
[0524]	NSSS	Narrowband Secondary Synchronization Signal
[0525]	NR	New Radio, Neighbour Relation
[0526]	NRF	NF Repository Function
[0527]	NRS	Narrowband Reference Signal
[0528]	NS	Network Service
[0529]	NSA	Non-Standalone operation mode
[0530]	NSD	Network Service Descriptor
[0531]	NSR	Network Service Record
[0532]	NSSAI	`Network Slice Selection Assistance Information
[0533]	S-NNSAI	Single-NSSAI
[0534]	NSSF	Network Slice Selection Function
[0535]	NW	Network
[0536]	NWUS	Narrowband wake-up signal, Narrowband WUS
[0537]	NZP	Non-Zero Power
[0538]	O&M	Operation and Maintenance
[0539]	ODU2	Optical channel Data Unit - type 2
[0540]	OFDM	Orthogonal Frequency Division Multiplexing
[0541]	OFDMA	Orthogonal Frequency Division Multiple Access
[0542]	OOB	Out-of-band
[0543]	OOS	Out of Sync
[0544]	OPEX	OPerating EXpense
[0545]	OSI	Other System Information
[0546]	OSS	Operations Support System
[0547]	OTA	over-the-air

[0548]	PAPR	Peak-to-Average Power Ratio
[0549]	PAR	Peak to Average Ratio
[0550]	PBCH	Physical Broadcast Channel
[0551]	PC	Power Control, Personal Computer
[0552]	PCC	Primary Component Carrier, Primary CC
[0553]	PCell	Primary Cell
[0554]	PCI	Physical Cell ID, Physical Cell Identity
[0555]	PCEF	Policy and Charging Enforcement Function
[0556]	PCF	Policy Control Function
[0557]	PCRF	Policy Control and Charging Rules Function
[0558]	PDCP	Packet Data Convergence Protocol, Packet Data Convergence Protocol layer
[0559]	PDCCH	Physical Downlink Control Channel
[0560]	PDCP	Packet Data Convergence Protocol
[0561]	PDN	Packet Data Network, Public Data Network
[0562]	PDSCH	Physical Downlink Shared Channel
[0563]	PDU	Protocol Data Unit
[0564]	PEI	Permanent Equipment Identifiers
[0565]	PFD	Packet Flow Description
[0566]	P-GW	PDN Gateway
[0567]	PHICH	Physical hybrid-ARQ indicator channel
[0568]	PHY	Physical layer
[0569]	PLMN	Public Land Mobile Network
[0570]	PIN	Personal Identification Number
[0571]	PM	Performance Measurement
[0572]	PMI	Precoding Matrix Indicator
[0573]	PNF	Physical Network Function
[0574]	PNFD	Physical Network Function Descriptor
[0575]	PNFR	Physical Network Function Record
[0576]	POC	PTT over Cellular
[0577]	PP, PTP	Point-to-Point
[0578]	PPP	Point-to-Point Protocol

[0579]	PRACH	Physical RACH
[0580]	PRB	Physical resource block
[0581]	PRG	Physical resource block group
[0582]	ProSe	Proximity Services, Proximity-Based Service
[0583]	PRS	Positioning Reference Signal
[0584]	PRR	Packet Reception Radio
[0585]	PS	Packet Services
[0586]	PSBCH	Physical Sidelink Broadcast Channel
[0587]	PSDCH	Physical Sidelink Downlink Channel
[0588]	PSCCH	Physical Sidelink Control Channel
[0589]	PSSCH	Physical Sidelink Shared Channel
[0590]	PSCell	Primary SCell
[0591]	PSS	Primary Synchronization Signal
[0592]	PSTN	Public Switched Telephone Network
[0593]	PT-RS	Phase-tracking reference signal
[0594]	PTT	Push-to-Talk
[0595]	PUCCH	Physical Uplink Control Channel
[0596]	PUSCH	Physical Uplink Shared Channel
[0597]	QAM	Quadrature Amplitude Modulation
[0598]	QCI	QoS class of identifier
[0599]	QCL	Quasi co-location
[0600]	QFI	QoS Flow ID, QoS Flow Identifier
[0601]	QoS	Quality of Service
[0602]	QPSK	Quadrature (Quaternary) Phase Shift Keying
[0603]	QZSS	Quasi-Zenith Satellite System
[0604]	RA-RNTI	Random Access RNTI
[0605]	RAB	Radio Access Bearer, Random Access Burst
[0606]	RACH	Random Access Channel
[0607]	RADIUS	Remote Authentication Dial In User Service
[0608]	RAN	Radio Access Network
[0609]	RAND	RANDom number (used for authentication)
[0610]	RAR	Random Access Response

[0611]	RAT	Radio Access Technology
[0612]	RAU	Routing Area Update
[0613]	RB	Resource block, Radio Bearer
[0614]	RBG	Resource block group
[0615]	REG	Resource Element Group
[0616]	Rel	Release
[0617]	REQ	REQuest
[0618]	RF	Radio Frequency
[0619]	RI	Rank Indicator
[0620]	RIV	Resource indicator value
[0621]	RL	Radio Link
[0622]	RLC	Radio Link Control, Radio Link Control layer
[0623]	RLC AM	RLC Acknowledged Mode
[0624]	RLC UM	RLC Unacknowledged Mode
[0625]	RLF	Radio Link Failure
[0626]	RLM	Radio Link Monitoring
[0627]	RLM-RS	Reference Signal for RLM
[0628]	RM	Registration Management
[0629]	RMC	Reference Measurement Channel
[0630]	RMSI	Remaining MSI, Remaining Minimum System Information
[0631]	RN	Relay Node
[0632]	RNC	Radio Network Controller
[0633]	RNL	Radio Network Layer
[0634]	RNTI	Radio Network Temporary Identifier
[0635]	ROHC	RObust Header Compression
[0636]	RRC	Radio Resource Control, Radio Resource Control layer
[0637]	RRM	Radio Resource Management
[0638]	RS	Reference Signal
[0639]	RSRP	Reference Signal Received Power
[0640]	RSRQ	Reference Signal Received Quality
[0641]	RSSI	Received Signal Strength Indicator
[0642]	RSU	Road Side Unit

[0643]	RSTD	Reference Signal Time difference
[0644]	RTP	Real Time Protocol
[0645]	RTS	Ready-To-Send
[0646]	RTT	Round Trip Time
[0647]	Rx	Reception, Receiving, Receiver
[0648]	S1AP	S1 Application Protocol
[0649]	S1-MME	S1 for the control plane
[0650]	S1-U	S1 for the user plane
[0651]	S-GW	Serving Gateway
[0652]	S-RNTI	SRNC Radio Network Temporary Identity
[0653]	S-TMSI	SAE Temporary Mobile Station Identifier
[0654]	SA	Standalone operation mode
[0655]	SAE	System Architecture Evolution
[0656]	SAP	Service Access Point
[0657]	SAPD	Service Access Point Descriptor
[0658]	SAPI	Service Access Point Identifier
[0659]	SCC	Secondary Component Carrier, Secondary CC
[0660]	SCell	Secondary Cell
[0661]	SC-FDMA	Single Carrier Frequency Division Multiple Access
[0662]	SCG	Secondary Cell Group
[0663]	SCM	Security Context Management
[0664]	SCS	Subcarrier Spacing
[0665]	SCTP	Stream Control Transmission Protocol
[0666]	SDAP	Service Data Adaptation Protocol, Service Data Adaptation Protocol layer
[0667]	SDL	Supplementary Downlink
[0668]	SDNF	Structured Data Storage Network Function
[0669]	SDP	Service Discovery Protocol (Bluetooth related)
[0670]	SDSF	Structured Data Storage Function
[0671]	SDU	Service Data Unit
[0672]	SEAF	Security Anchor Function
[0673]	SeNB	secondary eNB

[0674]	SEPP	Security Edge Protection Proxy
[0675]	SFI	Slot format indication
[0676]	SFTD	Space-Frequency Time Diversity, SFN and frame timing difference
[0677]	SFN	System Frame Number
[0678]	SgNB	Secondary gNB
[0679]	SGSN	Serving GPRS Support Node
[0680]	S-GW	Serving Gateway
[0681]	SI	System Information
[0682]	SI-RNTI	System Information RNTI
[0683]	SIB	System Information Block
[0684]	SIM	Subscriber Identity Module
[0685]	SIP	Session Initiated Protocol
[0686]	SiP	System in Package
[0687]	SL	Sidelink
[0688]	SLA	Service Level Agreement
[0689]	SM	Session Management
[0690]	SMF	Session Management Function
[0691]	SMS	Short Message Service
[0692]	SMSF	SMS Function
[0693]	SMTC	SSB-based Measurement Timing Configuration
[0694]	SN	Secondary Node, Sequence Number
[0695]	SoC	System on Chip
[0696]	SON	Self-Organizing Network
[0697]	SpCell	Special Cell
[0698]	SP-CSI-RNTI	Semi-Persistent CSI RNTI
[0699]	SPS	Semi-Persistent Scheduling
[0700]	SQN	Sequence number
[0701]	SR	Scheduling Request
[0702]	SRB	Signalling Radio Bearer
[0703]	SRS	Sounding Reference Signal
[0704]	SS	Synchronization Signal

[0705]	SSB	Synchronization Signal Block, SS/PBCH Block
[0706]	SSBRI	SS/PBCH Block Resource Indicator, Synchronization Signal Block Resource Indicator
[0707]	SSC	Session and Service Continuity
[0708]	SS-RSRP	Synchronization Signal based Reference Signal Received Power
[0709]	SS-RSRQ	Synchronization Signal based Reference Signal Received Quality
[0710]	SS-SINR	Synchronization Signal based Signal to Noise and Interference Ratio
[0711]	SSS	Secondary Synchronization Signal
[0712]	SSSG	Search Space Set Group
[0713]	SSSIF	Search Space Set Indicator
[0714]	SST	Slice/Service Types
[0715]	SU-MIMO	Single User MIMO
[0716]	SUL	Supplementary Uplink
[0717]	TA	Timing Advance, Tracking Area
[0718]	TAC	Tracking Area Code
[0719]	TAG	Timing Advance Group
[0720]	TAU	Tracking Area Update
[0721]	TB	Transport Block
[0722]	TBS	Transport Block Size
[0723]	TBD	To Be Defined
[0724]	TCI	Transmission Configuration Indicator
[0725]	TCP	Transmission Communication Protocol
[0726]	TDD	Time Division Duplex
[0727]	TDM	Time Division Multiplexing
[0728]	TDMA	Time Division Multiple Access
[0729]	TE	Terminal Equipment
[0730]	TEID	Tunnel End Point Identifier
[0731]	TFT	Traffic Flow Template
[0732]	TMSI	Temporary Mobile Subscriber Identity
[0733]	TNL	Transport Network Layer
[0734]	TPC	Transmit Power Control

[0735]	TPMI	Transmitted Precoding Matrix Indicator
[0736]	TR	Technical Report
[0737]	TRP, TRxP	Transmission Reception Point
[0738]	TRS	Tracking Reference Signal
[0739]	TRx	Transceiver
[0740]	TS	Technical Specifications, Technical Standard
[0741]	TTI	Transmission Time Interval
[0742]	Tx	Transmission, Transmitting, Transmitter
[0743]	U-RNTI	UTRAN Radio Network Temporary Identity
[0744]	UART	Universal Asynchronous Receiver and Transmitter
[0745]	UCI	Uplink Control Information
[0746]	UE	User Equipment
[0747]	UDM	Unified Data Management
[0748]	UDP	User Datagram Protocol
[0749]	UDSF	Unstructured Data Storage Network Function
[0750]	UICC	Universal Integrated Circuit Card
[0751]	UL	Uplink
[0752]	UM	Unacknowledged Mode
[0753]	UML	Unified Modelling Language
[0754]	UMTS	Universal Mobile Telecommunications System
[0755]	UP	User Plane
[0756]	UPF	User Plane Function
[0757]	URI	Uniform Resource Identifier
[0758]	URL	Uniform Resource Locator
[0759]	URLLC	Ultra-Reliable and Low Latency
[0760]	USB	Universal Serial Bus
[0761]	USIM	Universal Subscriber Identity Module
[0762]	USS	UE-specific search space
[0763]	UTRA	UMTS Terrestrial Radio Access
[0764]	UTRAN	Universal Terrestrial Radio Access Network
[0765]	UwPTS	Uplink Pilot Time Slot
[0766]	V2I	Vehicle-to-Infrastruction

[0767]	V2P	Vehicle-to-Pedestrian
[0768]	V2V	Vehicle-to-Vehicle
[0769]	V2X	Vehicle-to-everything
[0770]	VIM	Virtualized Infrastructure Manager
[0771]	VL	Virtual Link,
[0772]	VLAN	Virtual LAN, Virtual Local Area Network
[0773]	VM	Virtual Machine
[0774]	VNF	Virtualized Network Function
[0775]	VNFFG	VNF Forwarding Graph
[0776]	VNFFGD	VNF Forwarding Graph Descriptor
[0777]	VNFM	VNF Manager
[0778]	VoIP	Voice-over-IP, Voice-over-Internet Protocol
[0779]	VPLMN	Visited Public Land Mobile Network
[0780]	VPN	Virtual Private Network
[0781]	VRB	Virtual Resource Block
[0782]	WiMAX	Worldwide Interoperability for Microwave Access
[0783]	WLAN	Wireless Local Area Network
[0784]	WMAN	Wireless Metropolitan Area Network
[0785]	WPAN	Wireless Personal Area Network
[0786]	X2-C	X2-Control plane
[0787]	X2-U	X2-User plane
[0788]	XML	eXtensible Markup Language
[0789]	XRES	EXpected user RESponse
[0790]	XOR	eXclusive OR
[0791]	ZC	Zadoff-Chu
[0792]	ZP	Zero Power

Terminology

[0793] For the purposes of the present document, the following terms and definitions are applicable to the examples and embodiments discussed herein, but are not meant to be limiting.

[0794] The term “circuitry” as used herein refers to, is part of, or includes hardware components such as an electronic circuit, a logic circuit, a processor (shared, dedicated, or

group) and/or memory (shared, dedicated, or group), an Application Specific Integrated Circuit (ASIC), a field-programmable device (FPD) (e.g., a field-programmable gate array (FPGA), a programmable logic device (PLD), a complex PLD (CPLD), a high-capacity PLD (HCPLD), a structured ASIC, or a programmable SoC), digital signal processors (DSPs), etc., that are configured to provide the described functionality. In some embodiments, the circuitry may execute one or more software or firmware programs to provide at least some of the described functionality. The term "circuitry" may also refer to a combination of one or more hardware elements (or a combination of circuits used in an electrical or electronic system) with the program code used to carry out the functionality of that program code. In these embodiments, the combination of hardware elements and program code may be referred to as a particular type of circuitry.

[0795] The term "processor circuitry" as used herein refers to, is part of, or includes circuitry capable of sequentially and automatically carrying out a sequence of arithmetic or logical operations, or recording, storing, and/or transferring digital data. The term "processor circuitry" may refer to one or more application processors, one or more baseband processors, a physical central processing unit (CPU), a single-core processor, a dual-core processor, a triple-core processor, a quad-core processor, and/or any other device capable of executing or otherwise operating computer-executable instructions, such as program code, software modules, and/or functional processes. The terms "application circuitry" and/or "baseband circuitry" may be considered synonymous to, and may be referred to as, "processor circuitry."

[0796] The term "interface circuitry" as used herein refers to, is part of, or includes circuitry that enables the exchange of information between two or more components or devices. The term "interface circuitry" may refer to one or more hardware interfaces, for example, buses, I/O interfaces, peripheral component interfaces, network interface cards, and/or the like.

[0797] The term "user equipment" or "UE" as used herein refers to a device with radio communication capabilities and may describe a remote user of network resources in a communications network. The term "user equipment" or "UE" may be considered synonymous to, and may be referred to as, client, mobile, mobile device, mobile terminal, user terminal, mobile unit, mobile station, mobile user, subscriber, user, remote station, access agent, user agent, receiver, radio equipment, reconfigurable radio equipment,

reconfigurable mobile device, etc. Furthermore, the term “user equipment” or “UE” may include any type of wireless/wired device or any computing device including a wireless communications interface.

[0798] The term “network element” as used herein refers to physical or virtualized equipment and/or infrastructure used to provide wired or wireless communication network services. The term “network element” may be considered synonymous to and/or referred to as a networked computer, networking hardware, network equipment, network node, router, switch, hub, bridge, radio network controller, RAN device, RAN node, gateway, server, virtualized VNF, NFVI, and/or the like.

[0799] The term “computer system” as used herein refers to any type interconnected electronic devices, computer devices, or components thereof. Additionally, the term “computer system” and/or “system” may refer to various components of a computer that are communicatively coupled with one another. Furthermore, the term “computer system” and/or “system” may refer to multiple computer devices and/or multiple computing systems that are communicatively coupled with one another and configured to share computing and/or networking resources.

[0800] The term “appliance,” “computer appliance,” or the like, as used herein refers to a computer device or computer system with program code (e.g., software or firmware) that is specifically designed to provide a specific computing resource. A “virtual appliance” is a virtual machine image to be implemented by a hypervisor-equipped device that virtualizes or emulates a computer appliance or otherwise is dedicated to provide a specific computing resource.

[0801] The term “resource” as used herein refers to a physical or virtual device, a physical or virtual component within a computing environment, and/or a physical or virtual component within a particular device, such as computer devices, mechanical devices, memory space, processor/CPU time, processor/CPU usage, processor and accelerator loads, hardware time or usage, electrical power, input/output operations, ports or network sockets, channel/link allocation, throughput, memory usage, storage, network, database and applications, workload units, and/or the like. A “hardware resource” may refer to compute, storage, and/or network resources provided by physical hardware element(s). A “virtualized resource” may refer to compute, storage, and/or network resources provided by virtualization infrastructure to an application, device, system, etc.

The term “network resource” or “communication resource” may refer to resources that are accessible by computer devices/systems via a communications network. The term “system resources” may refer to any kind of shared entities to provide services, and may include computing and/or network resources. System resources may be considered as a set of coherent functions, network data objects or services, accessible through a server where such system resources reside on a single host or multiple hosts and are clearly identifiable.

[0802] The term “channel” as used herein refers to any transmission medium, either tangible or intangible, which is used to communicate data or a data stream. The term “channel” may be synonymous with and/or equivalent to “communications channel,” “data communications channel,” “transmission channel,” “data transmission channel,” “access channel,” “data access channel,” “link,” “data link,” “carrier,” “radiofrequency carrier,” and/or any other like term denoting a pathway or medium through which data is communicated. Additionally, the term “link” as used herein refers to a connection between two devices through a RAT for the purpose of transmitting and receiving information.

[0803] The terms “instantiate,” “instantiation,” and the like as used herein refers to the creation of an instance. An “instance” also refers to a concrete occurrence of an object, which may occur, for example, during execution of program code.

[0804] The terms “coupled,” “communicatively coupled,” along with derivatives thereof are used herein. The term “coupled” may mean two or more elements are in direct physical or electrical contact with one another, may mean that two or more elements indirectly contact each other but still cooperate or interact with each other, and/or may mean that one or more other elements are coupled or connected between the elements that are said to be coupled with each other. The term “directly coupled” may mean that two or more elements are in direct contact with one another. The term “communicatively coupled” may mean that two or more elements may be in contact with one another by a means of communication including through a wire or other interconnect connection, through a wireless communication channel or ink, and/or the like.

[0805] The term “information element” refers to a structural element containing one or more fields. The term “field” refers to individual contents of an information element, or a data element that contains content.

[0806] The term “SMTC” refers to an SSB-based measurement timing configuration configured by *SSB-MeasurementTimingConfiguration*.

[0807] The term “SSB” refers to an SS/PBCH block.

[0808] The term “a “Primary Cell” refers to the MCG cell, operating on the primary frequency, in which the UE either performs the initial connection establishment procedure or initiates the connection re-establishment procedure.

[0809] The term “Primary SCG Cell” refers to the SCG cell in which the UE performs random access when performing the Reconfiguration with Sync procedure for DC operation.

[0810] The term “Secondary Cell” refers to a cell providing additional radio resources on top of a Special Cell for a UE configured with CA.

[0811] The term “Secondary Cell Group” refers to the subset of serving cells comprising the PSCell and zero or more secondary cells for a UE configured with DC.

[0812] The term “Serving Cell” refers to the primary cell for a UE in RRC_CONNECTED not configured with CA/DC there is only one serving cell comprising of the primary cell.

[0813] The term “serving cell” or “serving cells” refers to the set of cells comprising the Special Cell(s) and all secondary cells for a UE in RRC_CONNECTED configured with CA/.

[0814] The term “Special Cell” refers to the PCell of the MCG or the PSCell of the SCG for DC operation; otherwise, the term “Special Cell” refers to the Pcell.

WHAT IS CLAIMED IS:

1. An apparatus in an Integrated Access and Backhaul (IAB) network, the apparatus comprising:

radio front end circuitry configured to receive random access channel (RACH) resource configuration for communicating with a parent node and a child node; and

processor circuitry configured to:

determine, based on the RACH resource configuration, a first RACH resource for communicating in a half-duplex mode with the parent node; and

determine, based on the RACH resource configuration, a second RACH resource for communicating in the half-duplex mode with the child node, wherein the second RACH resource is orthogonal to the first RACH resource.

2. The apparatus of claim 1, wherein the RACH resource configuration comprises a first plurality of RACH resources for communicating with the parent node and a second plurality of RACH resources for communicating with the child node and wherein the second plurality of RACH resources is a subset of the first plurality of RACH resources.

3. The apparatus of claim 2, wherein the processor circuitry is configured to:

choose the first RACH resource from the first plurality of RACH resources; and

choose the second RACH resource from the second plurality of RACH resources such that the first RACH resource is orthogonal to the second RACH resource.

4. The apparatus of claim 2, wherein the RACH resource configuration further comprises a valid resource indication representing which one of the first and second plurality of RACH resources are valid for communicating with the parent and child nodes.

5. The apparatus of claim 4, wherein the valid resource indication is included in at least one of a Radio Resource Control (RRC) information element (IE), a group-common physical downlink control channel (GC-PDCCH), or a Media Access Control (MAC) control element (CE).

6. The apparatus of claim 2, wherein the RACH resource configuration further comprises an invalid resource indication representing which one of the first and second plurality of RACH resources are invalid for communicating with the parent and child nodes.

7. The apparatus of claim 6, wherein the invalid resource indication is included in at least one of a Radio Resource Control (RRC) information element (IE), a group-common physical downlink control channel (GC-PDCCH), or a Media Access Control (MAC) control element (CE).

8. The apparatus of claim 1, wherein the apparatus comprises an IAB node, wherein the parent node comprises a parent IAB node or an IAB donor, and wherein the child node comprises a child user equipment.

9. A method comprising:

receiving, at an Integrated Access and Backhaul (IAB) network, random access channel (RACH) resource configuration for communicating with a parent node and a child node;

determining, based on the RACH resource configuration, a first RACH resource for communicating in a half-duplex mode with the parent node; and

determining, based on the RACH resource configuration, a second RACH resource for communicating in the half-duplex mode with the child node, wherein the second RACH resource is orthogonal to the first RACH resource.

10. The method of claim 9, wherein the RACH resource configuration comprises a first plurality of RACH resources for communicating with the parent node and a second plurality of RACH resources for communicating with the child node and wherein the second plurality of RACH resources is a subset of the first plurality of RACH resources.

11. The method of claim 10, further comprising:

choosing the first RACH resource from the first plurality of RACH resources; and

choosing the second RACH resource from the second plurality of RACH resources such that the first RACH resource is orthogonal to the second RACH resource.

12. The method of claim 10, wherein the RACH resource configuration further comprises a valid resource indication representing which one of the first and second plurality of RACH resources are valid for communicating with the parent and child nodes.

13. The method of claim 10, further comprising:

receiving a valid resource indication included in at least one of a Radio Resource Control (RRC) information element (IE), a group-common physical downlink control channel (GC-PDCCH), or a Media Access Control (MAC) control element (CE), wherein the valid resource indication represents which one of the first and second plurality of RACH resources are valid for communicating with the parent and child nodes.

14. The method of claim 10, wherein the RACH resource configuration further comprises an invalid resource indication representing which one of the first and second plurality of RACH resources are invalid for communicating with the parent and child nodes.

15. The method of claim 10, further comprising:

receiving an invalid resource indication is included in at least one of a Radio Resource Control (RRC) information element (IE), a group-common physical downlink control channel (GC-PDCCH), or a Media Access Control (MAC) control element (CE), wherein the invalid resource indication represents which one of the first and second plurality of RACH resources are invalid for communicating with the parent and child nodes.

16. An apparatus in an Integrated Access and Backhaul (IAB) network, comprising:

a memory that stores instructions; and

a processor, upon executing the instructions, configured to:

receive random access channel (RACH) resource configuration for communicating with a parent node and a child node;

determine, based on the RACH resource configuration, a first RACH resource for communicating in a half-duplex mode with the parent node; and

determine, based on the RACH resource configuration, a second RACH resource for communicating in the half-duplex mode with the child node, wherein the second RACH resource is orthogonal to the first RACH resource.

17. The apparatus of claim 16, wherein the RACH resource configuration comprises a first plurality of RACH resources for communicating with the parent node and a second plurality of RACH resources for communicating with the child node and wherein the second plurality of RACH resources is a subset of the first plurality of RACH resources.

18. The apparatus of claim 16, wherein the processor is configured to:

choose the first RACH resource from the first plurality of RACH resources; and

choose the second RACH resource from the second plurality of RACH resources such that the first RACH resource is orthogonal to the second RACH resource.

19. The apparatus of claim 17, wherein the processor is further configured to receive a valid resource indication is included in at least one of a Radio Resource Control (RRC) information element (IE), a group-common physical downlink control channel (GC-PDCCH), or a Media Access Control (MAC) control element (CE), and wherein the valid resource indication represents which one of the first and second plurality of RACH resources are valid for communicating with the parent and child nodes.

20. The apparatus of claim 17, wherein the processor is further configured to receive an invalid resource indication is included in at least one of a Radio Resource Control (RRC) information element (IE), a group-common physical downlink control channel (GC-PDCCH), or a Media Access Control (MAC) control element (CE), and wherein the invalid resource indication represents which one of the first and second plurality of RACH resources are invalid for communicating with the parent and child nodes.

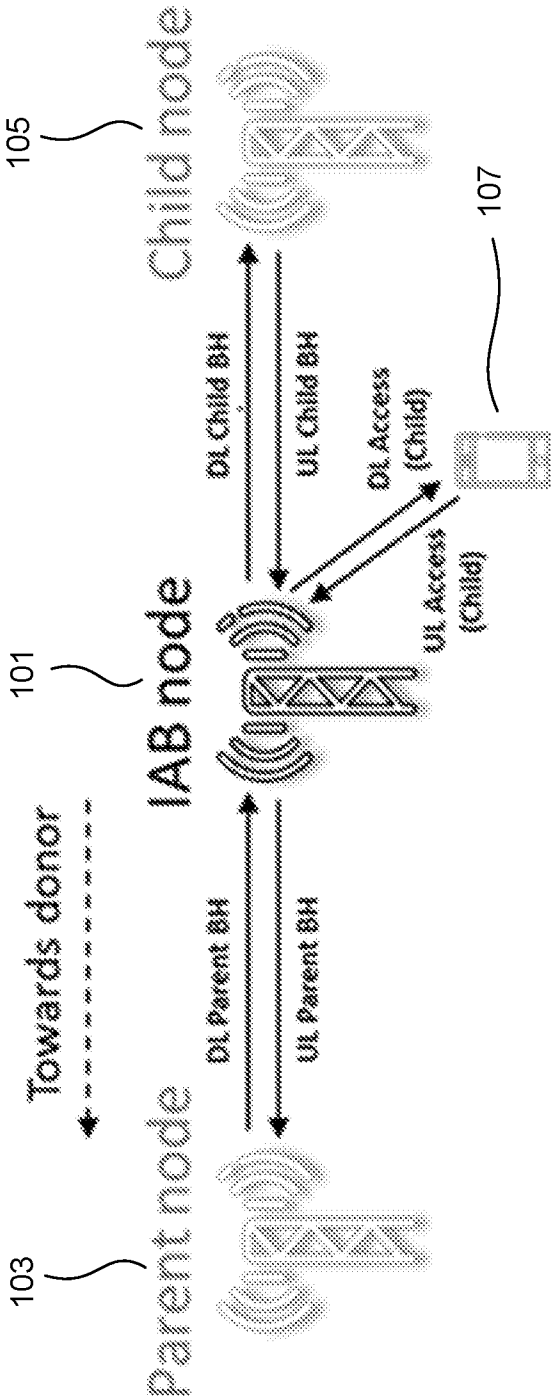
105
Child node
DL Child BH
UL Child BH
DL Access (Child)
UL Access (Child)
107
101
IAB node
Towards donor
DL Parent BH
UL Parent BH
103
Parent node

Figure 1

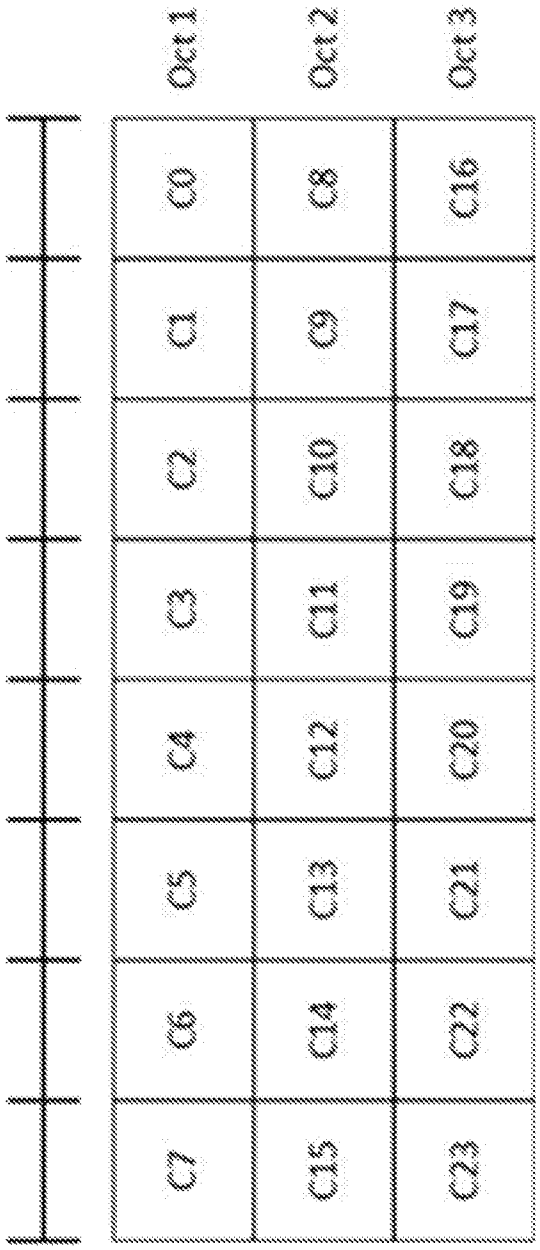
Oct 1
Oct 2
Oct 3
C0
C1
C2
C3
C4
C5
C6
C7
C8
C9
C10
C11
C12
C13
C14
C15
C16
C17
C18
C19
C20
C21
C22
C23

Figure 2

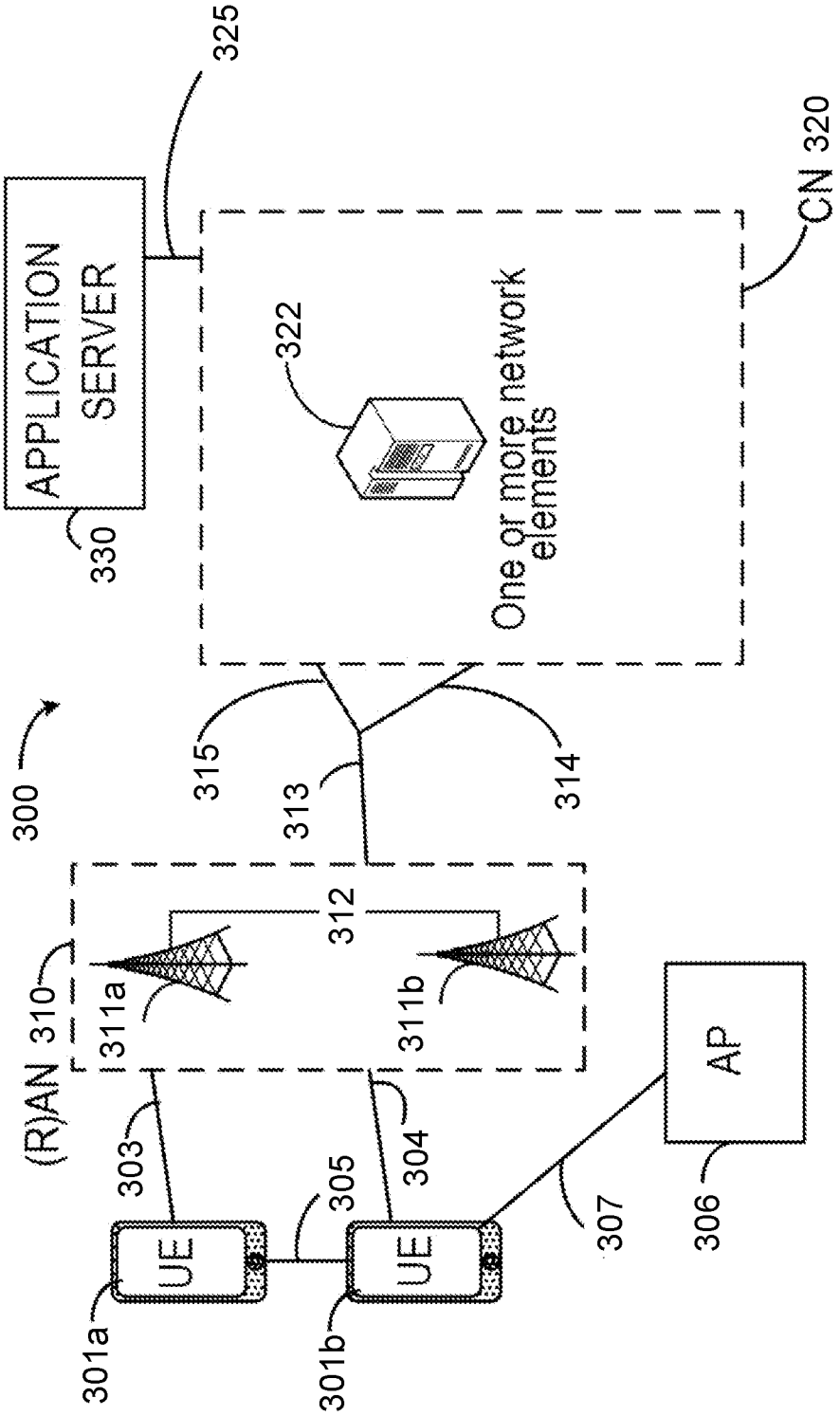
APPLICATION SERVER
330
325
CN 320
322
One or more network elements
300
315
313
314
(R)AN 310
312
311a
311b
303
304
305
UE
UE
301a
301b
307
AP
306

Figure 3

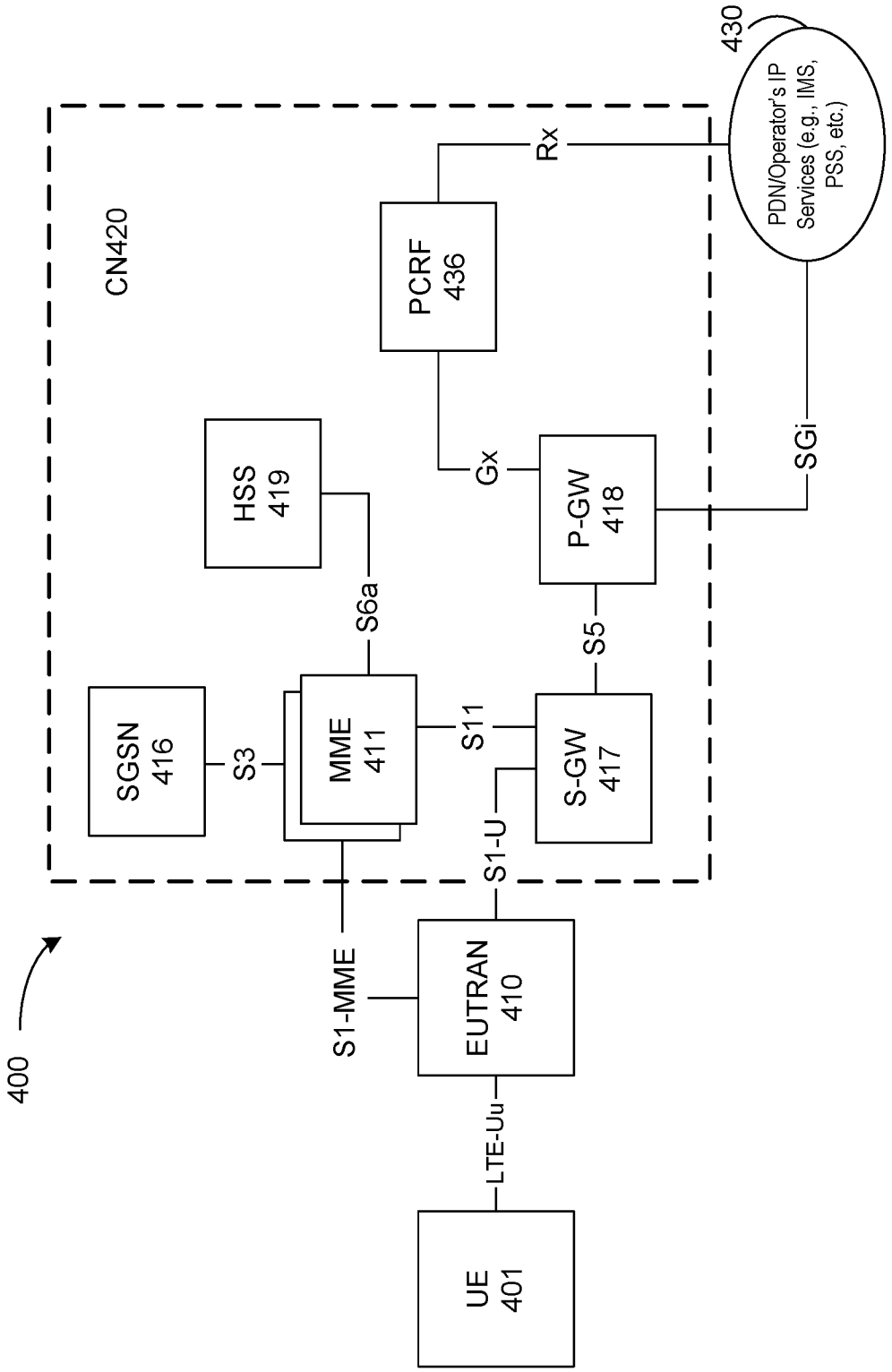
400
CN420
SGSN
416
S3
MME
411
S6a
HSS
419
S1-MME
S11
S1-U
S-GW
417
S5
P-GW
418
Gx
PCRF
436
Rx
SGi
430
PDN/Operator's IP
Services (e.g., IMS,
PSS, etc.)
EUTRAN
410
LTE-Uu
UE
401

Figure 4A

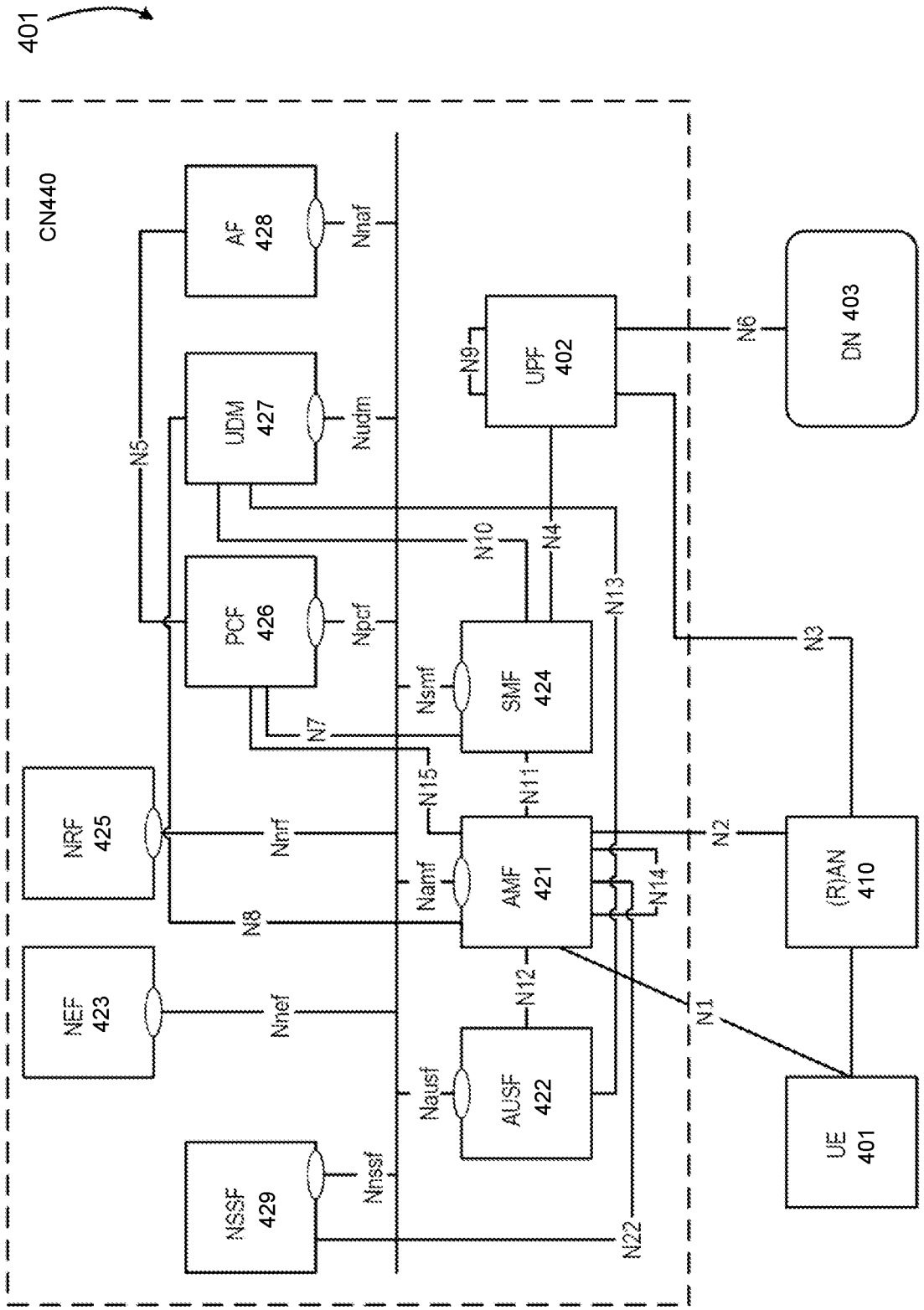
401
CN440
AF 428
Nnaf
UDM 427
Nudm
PCF 426
Npcf
NRF 425
Nnrf
NEF 423
Nnef
NSSF 429
Nnssf
UPF 402
N9
N6
DN 403
N5
N10
N4
N13
N3
SMF 424
Nsmf
N7
N15
N11
AMF 421
Namf
N8
N14
N2
(R)AN 410
N12
AUSF 422
Nausf
N1
UE 401
N22

Figure 4B

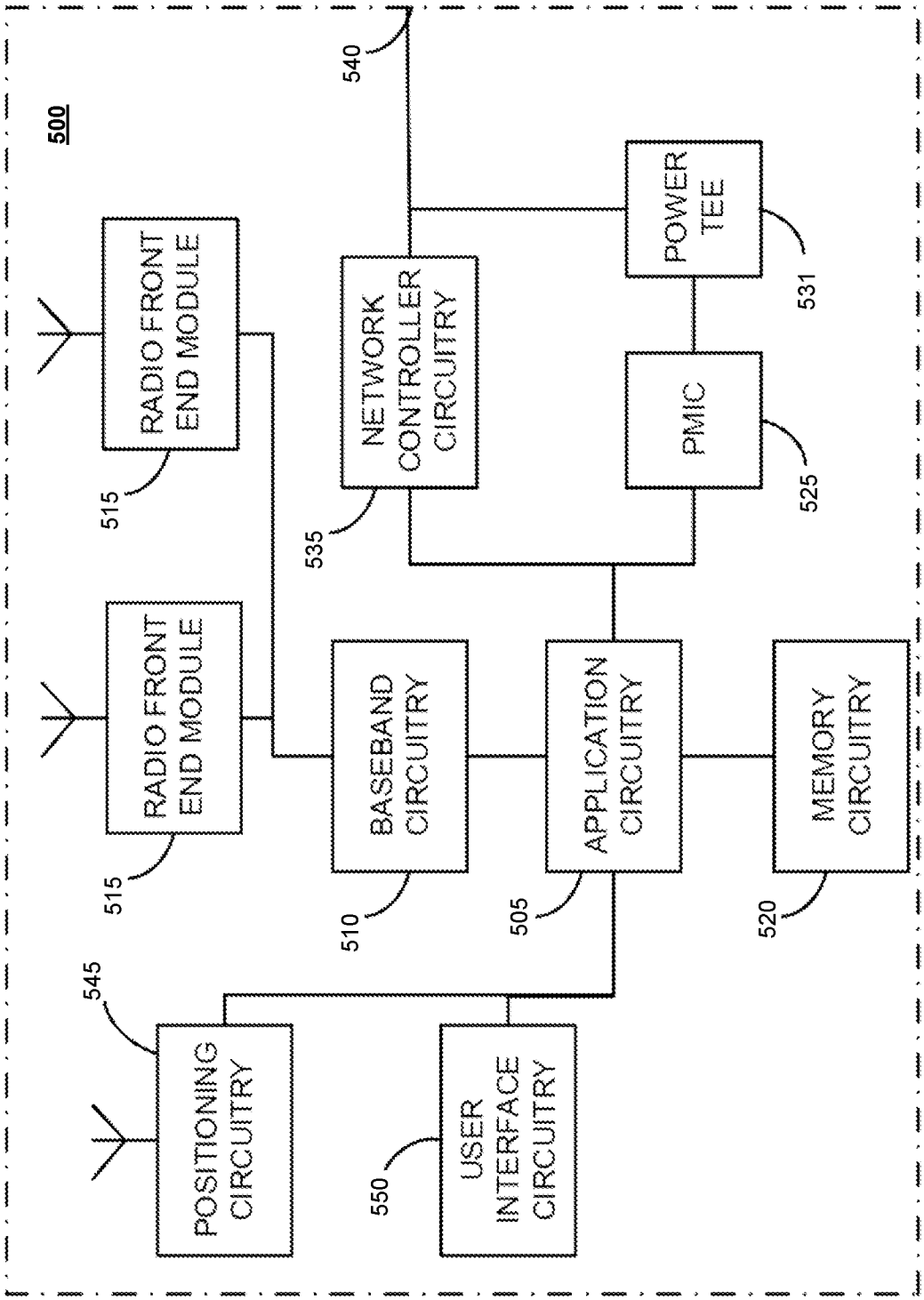
500
RADIO FRONT END MODULE
515
RADIO FRONT END MODULE
515
NETWORK CONTROLLER CIRCUITRY
535
540
POWER TEE
531
PMIC
525
BASEBAND CIRCUITRY
510
APPLICATION CIRCUITRY
505
MEMORY CIRCUITRY
520
POSITIONING CIRCUITRY
545
USER INTERFACE CIRCUITRY
550

Figure 5A

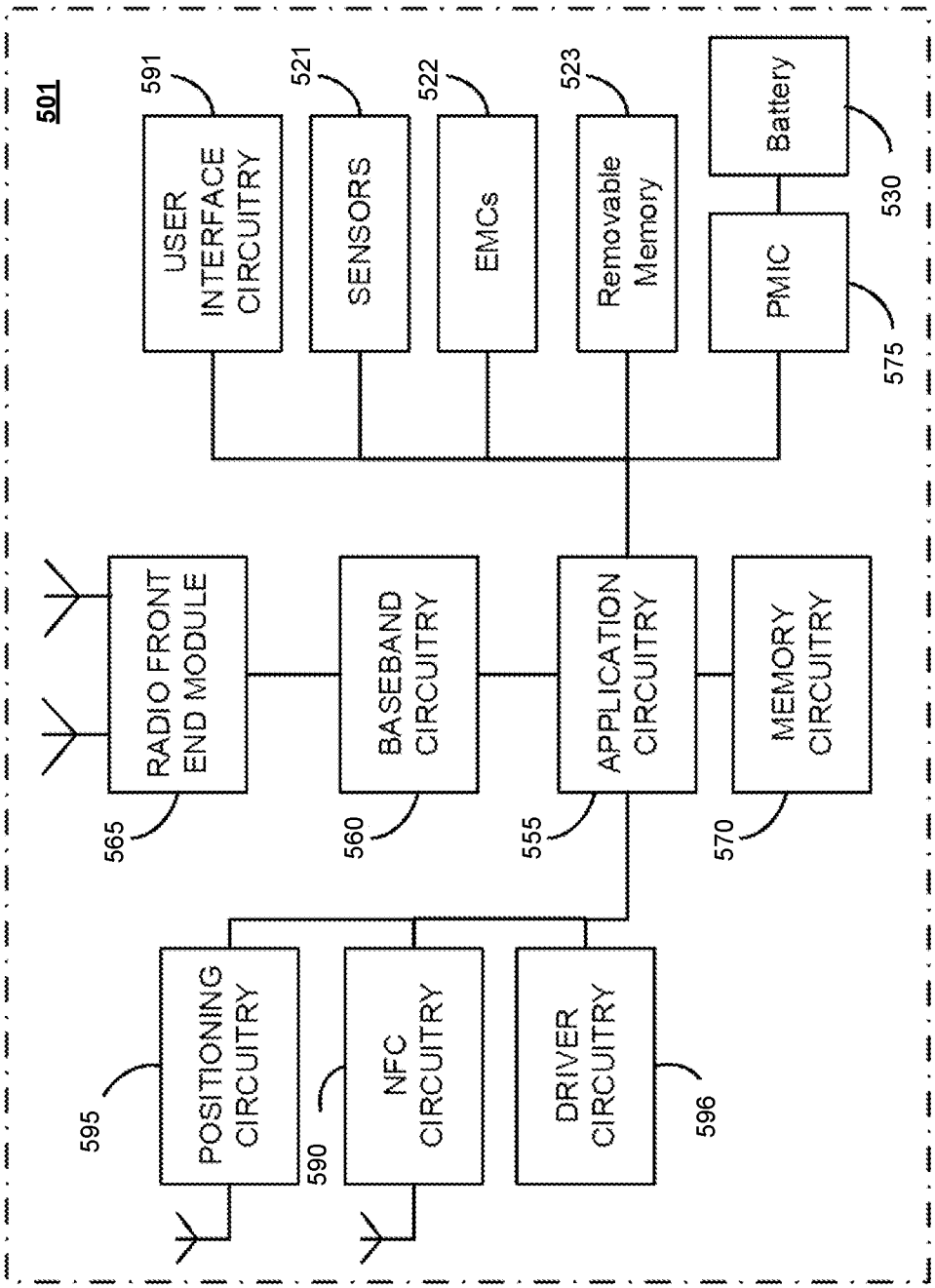
501
591
USER INTERFACE CIRCUITRY
521
SENSORS
522
EMCs
523
Removable Memory
Battery
530
PMIC
575
RADIO FRONT END MODULE
565
BASEBAND CIRCUITRY
560
APPLICATION CIRCUITRY
555
MEMORY CIRCUITRY
570
POSITIONING CIRCUITRY
595
NFC CIRCUITRY
590
DRIVER CIRCUITRY
596

Figure 5B

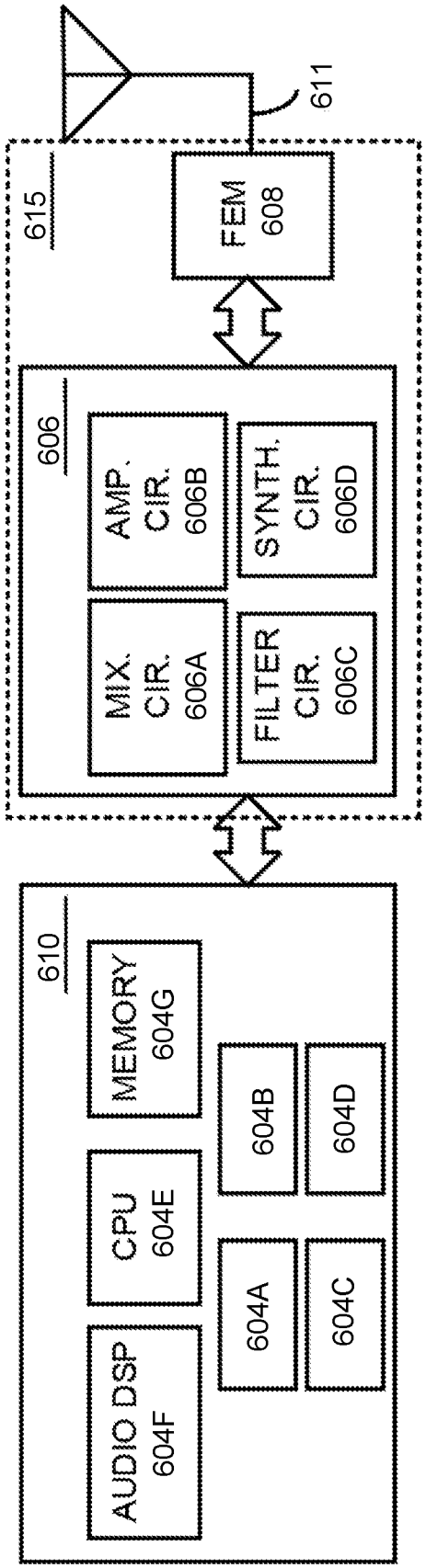
611
615
FEM
608
606
AMP.
CIR.
606B
SYNTH.
CIR.
606D
MIX.
CIR.
606A
FILTER
CIR.
606C
610
MEMORY
604G
CPU
604E
AUDIO DSP
604F
604B
604D
604A
604C

Figure 6

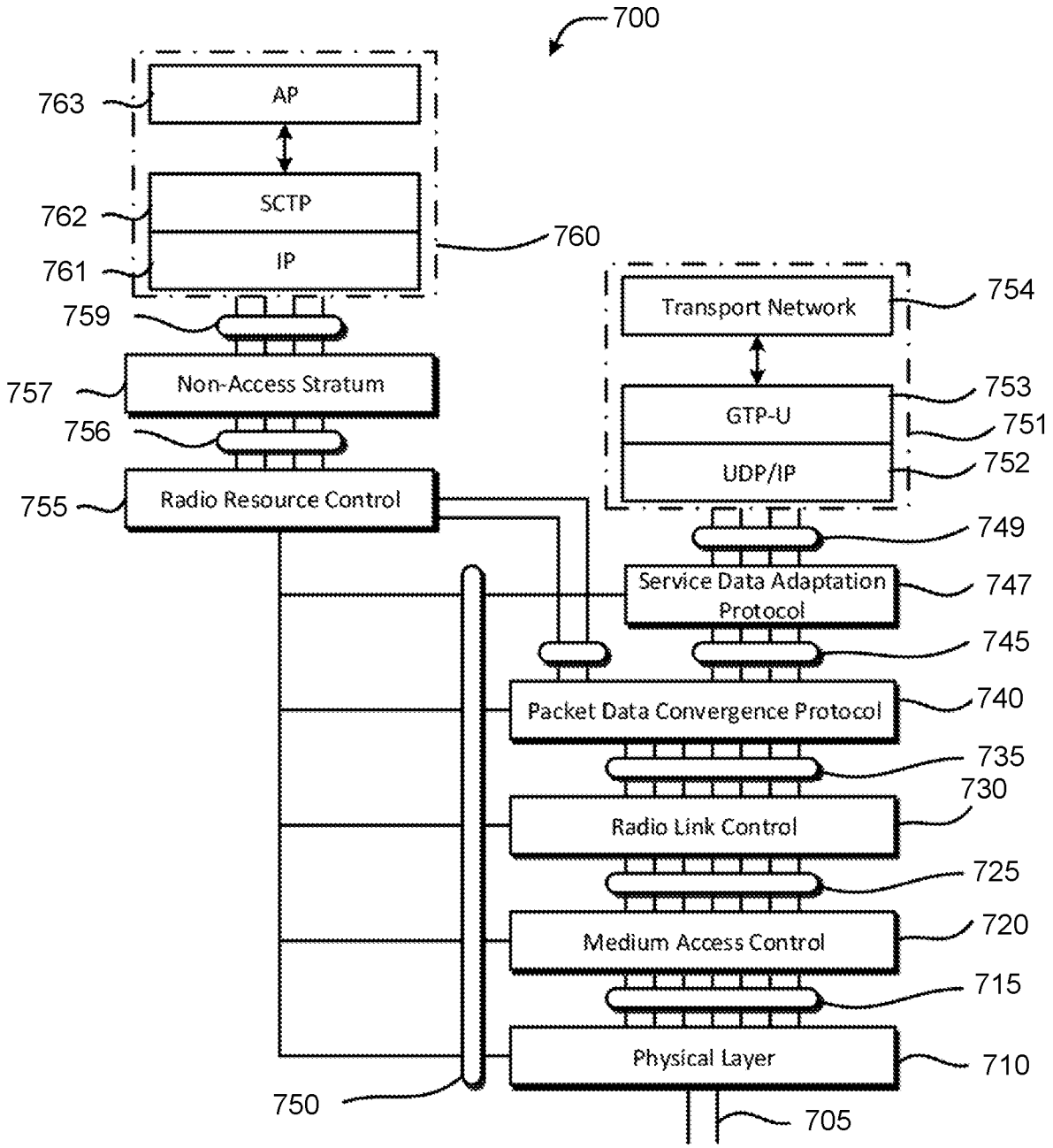
700
763
AP
762
SCTP
761
IP
760
759
757
Non-Access Stratum
756
755
Radio Resource Control
Transport Network
754
GTP-U
753
751
UDP/IP
752
749
Service Data Adaptation Protocol
747
745
Packet Data Convergence Protocol
740
735
730
Radio Link Control
725
Medium Access Control
720
715
Physical Layer
710
750
705

Figure 7

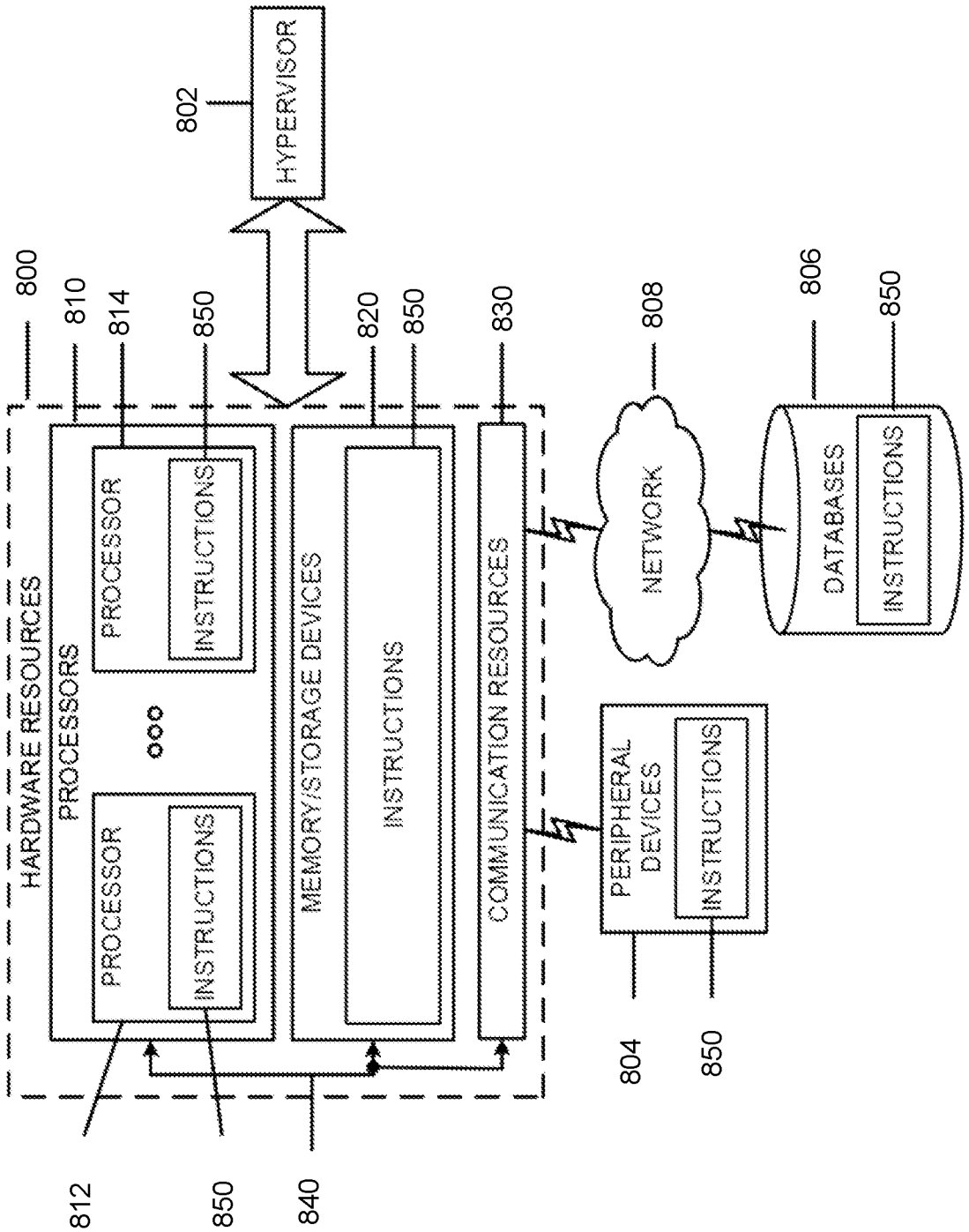
HYPERVISOR
802
800
HARDWARE RESOURCES
810
PROCESSORS
814
PROCESSOR
INSTRUCTIONS
850
PROCESSOR
INSTRUCTIONS
812
850
840
820
MEMORY/STORAGE DEVICES
850
INSTRUCTIONS
830
COMMUNICATION RESOURCES
808
NETWORK
806
DATABASES
850
INSTRUCTIONS
PERIPHERAL DEVICES
INSTRUCTIONS
804
850

Figure 8

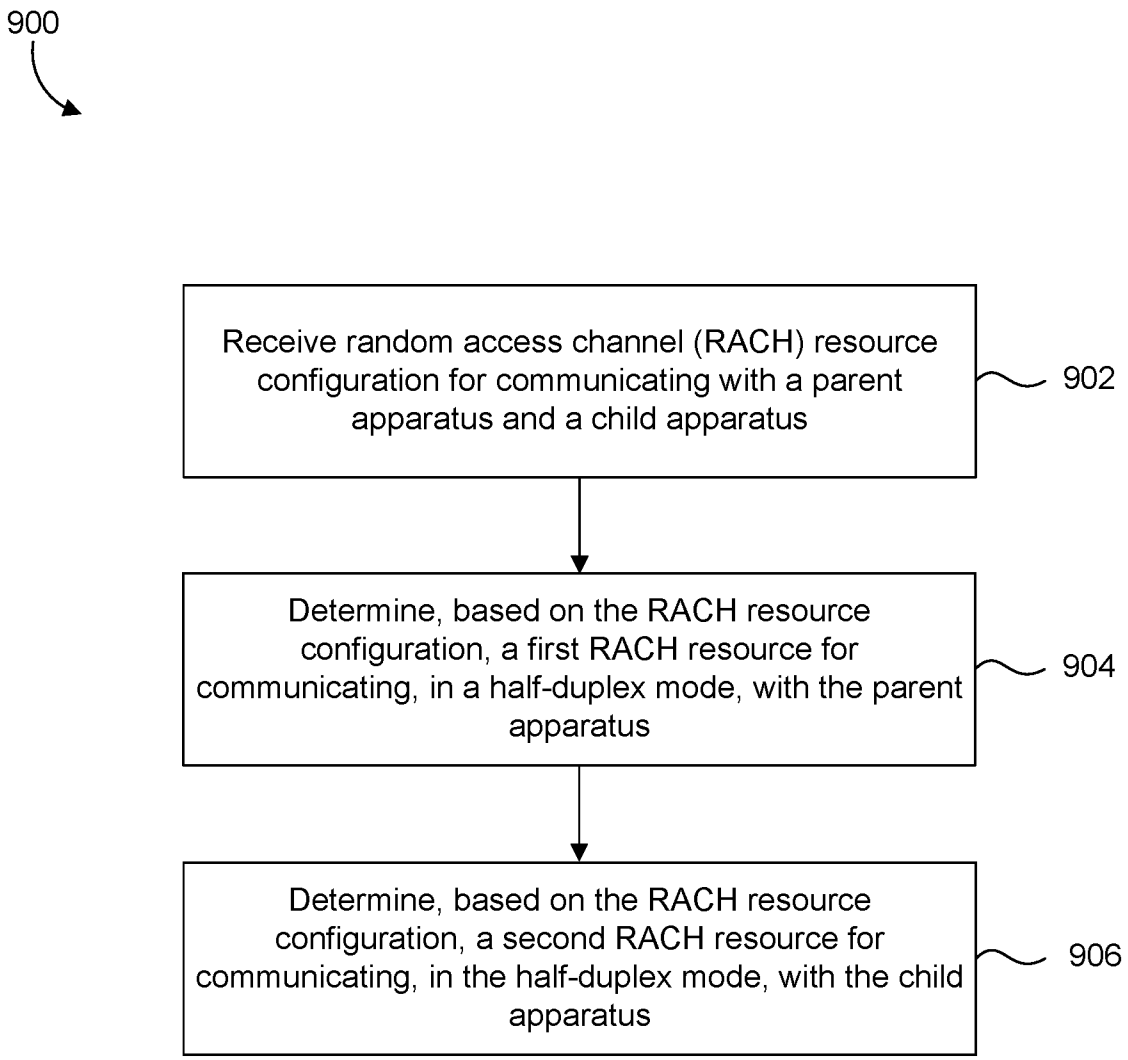
900
Receive random access channel (RACH) resource configuration for communicating with a parent apparatus and a child apparatus
902
Determine, based on the RACH resource configuration, a first RACH resource for communicating, in a half-duplex mode, with the parent apparatus
904
Determine, based on the RACH resource configuration, a second RACH resource for communicating, in the half-duplex mode, with the child apparatus
906

Figure 9

INTERNATIONAL SEARCH REPORT

International application No
PCT/US2020/013154

A. CLASSIFICATION OF SUBJECT MATTER

INV. H04W74/08
ADD. H04W74/00

According to International Patent Classification (IPC) or to both national classification and IPC

B. FIELDS SEARCHED

Minimum documentation searched (classification system followed by classification symbols)

H04W

Documentation searched other than minimum documentation to the extent that such documents are included in the fields searched

Electronic data base consulted during the international search (name of data base and, where practicable, search terms used)

EPO-Internal

C. DOCUMENTS CONSIDERED TO BE RELEVANT

Category*	Citation of document, with indication, where appropriate, of the relevant passages	Relevant to claim No.
X	INTERDIGITAL INC: "On Integrated Access and Backhaul Enhancements in NR", 3GPP DRAFT; R1-1813225, 3RD GENERATION PARTNERSHIP PROJECT (3GPP), MOBILE COMPETENCE CENTRE ; 650, ROUTE DES LUCIOLES ; F-06921 SOPHIA-ANTIPOLIS CEDEX ; FRANCE , vol. RAN WG1, no. Spokane, USA; 20181112 - 20181116 11 November 2018 (2018-11-11), XP051555228, Retrieved from the Internet: URL:http://www.3gpp.org/ftp/Meetings%5F3GPP%5FSYNC/RAN1/Docs/R1%2D1813225%2Ezip [retrieved on 2018-11-11]	1-4, 8-12, 16-18
Y	chapters 2 and 4	5-7, 13-15, 19,20

-/--

[X] Further documents are listed in the continuation of Box C.

[ ] See patent family annex.

* Special categories of cited documents :

"A" document defining the general state of the art which is not considered to be of particular relevance

"E" earlier application or patent but published on or after the international filing date

"L" document which may throw doubts on priority claim(s) or which is cited to establish the publication date of another citation or other special reason (as specified)

"O" document referring to an oral disclosure, use, exhibition or other means

"P" document published prior to the international filing date but later than the priority date claimed

"T" later document published after the international filing date or priority date and not in conflict with the application but cited to understand the principle or theory underlying the invention

"X" document of particular relevance; the claimed invention cannot be considered novel or cannot be considered to involve an inventive step when the document is taken alone

"Y" document of particular relevance; the claimed invention cannot be considered to involve an inventive step when the document is combined with one or more other such documents, such combination being obvious to a person skilled in the art

"&" document member of the same patent family

Date of the actual completion of the international search	Date of mailing of the international search report
30 March 2020	08/04/2020

Name and mailing address of the ISA/	Authorized officer
European Patent Office, P.B. 5818 Patentlaan 2 NL - 2280 HV Rijswijk Tel. (+31-70) 340-2040, Fax: (+31-70) 340-3016	Metozounve, Emeline

1

Form PCT/ISA/210 (second sheet) (April 2005)

INTERNATIONAL SEARCH REPORT

International application No
PCT/US2020/013154

C(Continuation). DOCUMENTS CONSIDERED TO BE RELEVANT

Category*	Citation of document, with indication, where appropriate, of the relevant passages	Relevant to claim No.

Y	INTEL CORPORATION: "PHY layer enhancements for NR IAB", 3GPP DRAFT; R1-1812486, 3RD GENERATION PARTNERSHIP PROJECT (3GPP), MOBILE COMPETENCE CENTRE ; 650, ROUTE DES LUCIOLES ; F-06921 SOPHIA-ANTIPOLIS CEDEX ; FRANCE , vol. RAN WG1, no. Spokane, USA; 20181112 - 20181116 3 November 2018 (2018-11-03), XP051478715, Retrieved from the Internet: URL:http://www.3gpp.org/ftp/tsg%5Fran/WG1%5FRL1/TSGR1%5F95/Docs/R1%2D1812486%2Ezip [retrieved on 2018-11-03]	5-7, 13-15, 19,20
A	chapters 4 and 5	1-4, 8-12, 16-18

1