May 6, 1969 J. B. RIDDLE ET AL 3,442,363

BILL ESCROW DEVICE

Filed Sept. 5, 1967 Sheet 1 of 2

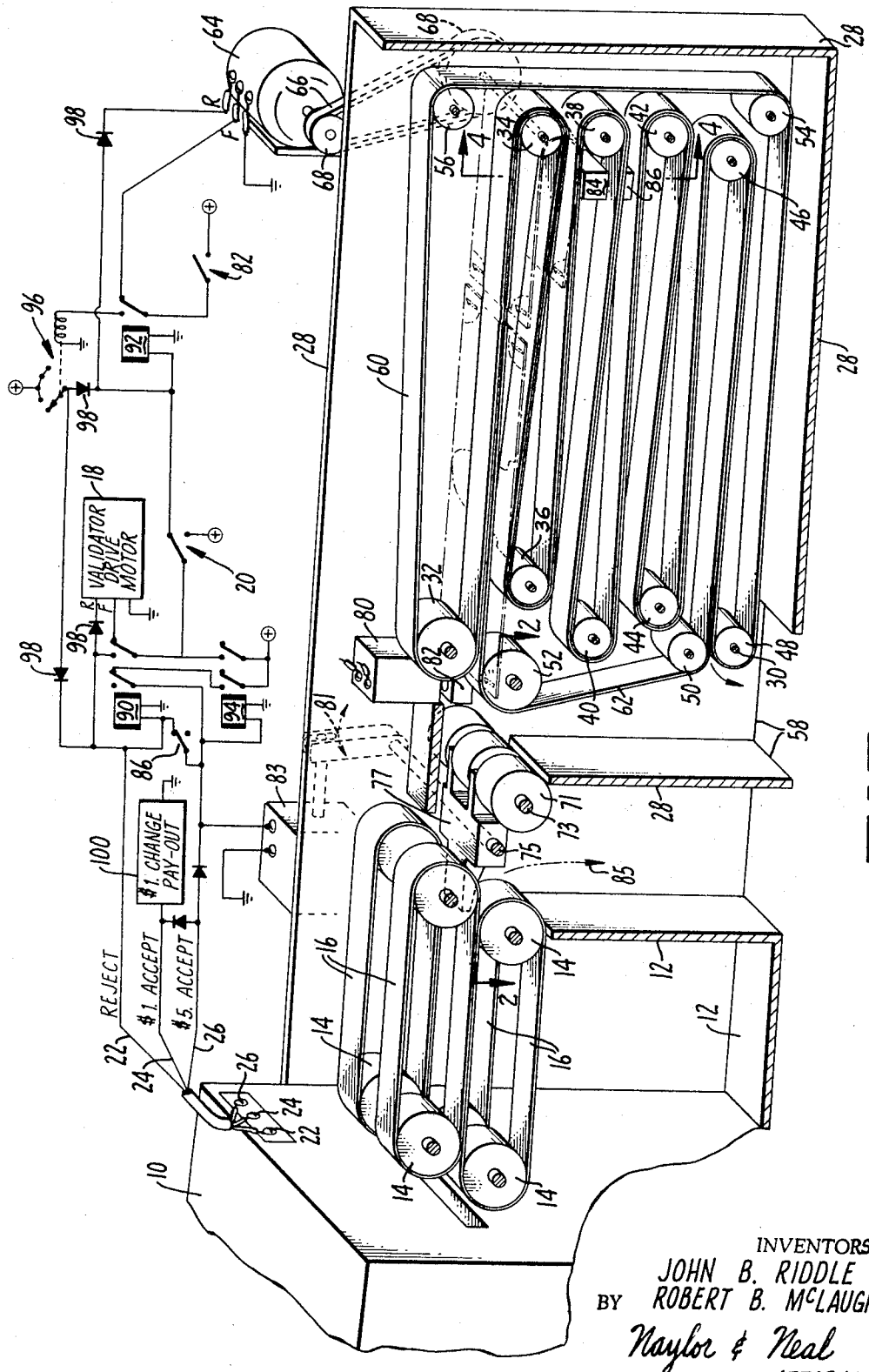

FIG. 1.

INVENTORS
JOHN B. RIDDLE
BY ROBERT B. McLAUGHLIN
Naylor & Neal
ATTORNEYS

May 6, 1969 J. B. RIDDLE ET AL 3,442,363

BILL ESCROW DEVICE

Filed Sept. 5, 1967 Sheet 2 of 2

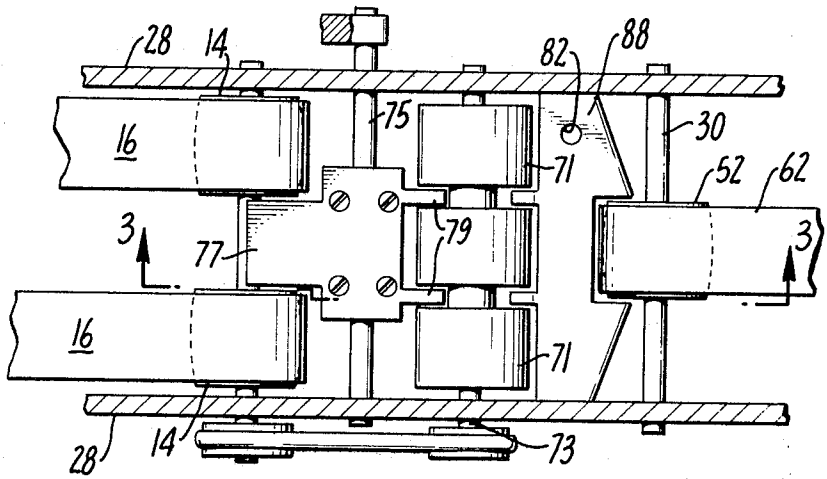

FIG. 2.

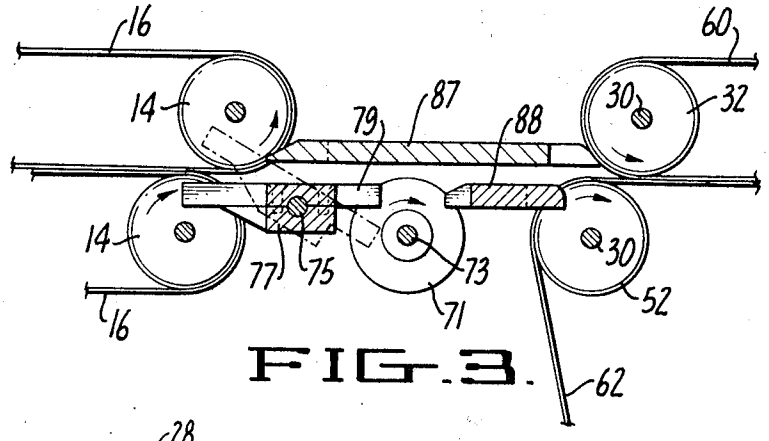

FIG. 3.

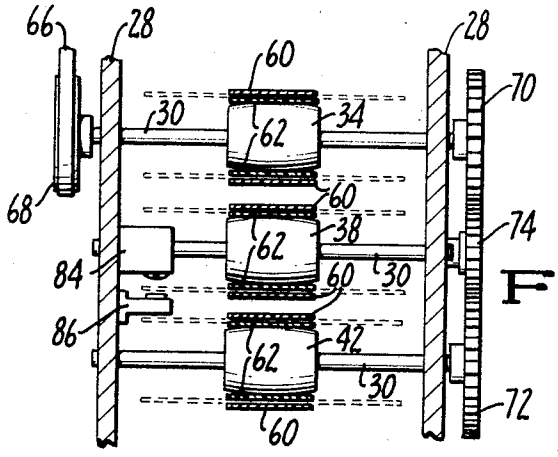

FIG. 4.

INVENTORS
JOHN B. RIDDLE
BY ROBERT B. McLAUGHLIN
Naylor & Neal
ATTORNEYS

United States Patent Office 3,442,363 Patented May 6, 1969

3,442,363

BILL ESCROW DEVICE

John B. Riddle, Los Altos Hills, and Robert B. McLaughlin, Palo Alto, Calif., assignors to Micro-Magnetic Industries, Inc., Palo Alto, Calif., a corporation of California

Filed Sept. 5, 1967, Ser. No. 665,469
Int. Cl. G07d 7/00; G06k 9/00
U.S. Cl. 194—4 8 Claims

ABSTRACT OF THE DISCLOSURE

An escrow device for currency validators having two belts with a common run extending through a serpentine path which occupies the majority of the length of the belts and is open at both ends with one end of the common run positioned adjacent to the validator discharge for taking validated bills and the other end positioned remote from the validator discharge for discharging bills from the escrow device. The common run has a length of between four and twenty-five times the length of the bills which are to be accumulated therein. The escrow device may also include the folllowing features: means for sorting bills of different denominations, reverse drive means for delivering bills from the escrow device back through the validator, counting means for counting out change in low value bills for a higher value bill, and photocell controlled drive means for the escrow belts to position bills in the common run closely spaced together, but positively separated from each other even when any sorting means is used.

Brief summary

This invention relates to bill escrow devices useable with currency validators such as validators like that shown in U.S. Patent No. 3,256,968 granted to Micro-Magnetic Industries as assignee of John B. Riddle and Robert B. McLaughlin.

A currency validator has been available on the market for accepting one and five dollar bills. This one-five validator is built like the validator shown in the above identified patent with recognizing means added to the validator for recognizing five dollar bills in addition to one dollar bills. That validator delivers the one and five dollar bills along a delivery path and generates first and second electrical signals indicating that five dollar and one dollar bills, respectively, have been validated. These electrical signals are generated just before final delivery of the bill which has been validated. The validator also contains apparatus similar to that shown in the patent for indicating when a bill or other object is in the validator, regardless of its position in the validator. That apparatus, while it includes several separate parts and switches, is connected to circuit elements which are the equivalent of a single switch which is closed when an object is in the validator at any location.

The apparatus of this invention may be added to the above mentioned one-five validator for handling the bills which are validated by the validator. The apparatus of this invention includes a bill accumulator which may be used to hold validated bills in escrow before a customer selects a purchase, but more importantly, this escrow device may be used with a bill denomination separator to provide an automatic device for giving previously validated bills as change for a validated five dollar bill. A bill diverter is mounted between the bill accumulator and the delivery belts of the validator, and the diverter is operated in response to the five dollar validation signal to intercept a five dollar bill being delivered by the validator and divert that bill to a strong box. When a one dollar bill is validated and passes from the validator, it passes through the diverter to the input side of the bill accumulator. The bill accumulator is provided with advancing means controlled by a photocell switch which advances the accumulator when a portion of a bill is present at the input side of the accumulator. Thus, when a one dollar bill is presented to the accumulator, the accumulator advances to draw in the one dollar bill until an open space is provided adjacent to the trailing edge of the bill through which light can pass to a photocell. With this drive control arrangement for the accumulator, the accumulator supports bills in closely spaced relation with a finite distance between each bill even when five dollar bills are periodically validated by the validator and diverted from the accumulator input.

The photocell which controls advancement of bills into the accumulator also functions with a stepping switch to count bills out of the accumulator and control and drive means are provided for driving the accumulator in reverse to give out as change for a five dollar bill a predetermined number of previously validated one dollar bills which have been accumulated in the accumulator.

The accumulator is constructed of a pair of endless belts supported together with a common run of the two belts extending through a serpentine path which has a length equal to between four and twenty-five times the length of the bills to be accumulated. One end of the common run is positioned adjacent to the validator discharge to receive and draw in validated bills, and the other end of the common run is positioned adjacent to the strong box so that once the accumulator is full of bills, further operation of the device causes one bill to be discharged from the accumulator into the strong box for each bill which is introduced into the accumulator. In this manner, the accumulator provides a reservoir of a limited number of previously validated one dollar bills which may be given out as change for five dollar bills. The number of bills which is thus available as change is sufficiently limited that the liability of loss from the machine because of malfunction or tampering is limited to the value of the small number of bills available in the accumulator at any time.

Automatic control means are provided for giving one dollar bills as change for five dollar bills, and a simple interlock is provided to prevent validation of a five dollar bill when insufficient one dollar bills are present in the accumulator to give change.

Other features and advantages of the invention will become apparent from the following description read in conjunction with the attached drawings in which:

FIG. 1 is a persepective view partially in section of the discharge end of a currency validator and the new escrow device of this invention with FIG. 1 illustrating schematically the electrical system which is employed for controlling the device;

FIG. 2 is a plan view of the central section of the apparatus of FIG. 1;

FIG. 3 is a vertical sectional view through the apparatus of FIG. 2 as indicated at 3—3 in FIG. 2; and

FIG. 4 is a vertical sectional view taken along the plane indicated at 4—4 in FIG. 1.

Referring now in detail to the drawings and particularly to FIG. 1, the validator with which the device is used may include a cabinet **10** with structural support elements **12** mounted thereon and supporting eight rollers **14** over which are entrained drive belts **16**. The validator has a validator drive motor **18** which drives transport means (not shown) in the cabinet **10** and the rollers **14** for transporting money through the validator. The validator drive motor **18** is a reversible motor so that it may be operated forward to deliver validated bills to the ac-

cumulator, and it may be operated in reverse to return rejected bills to the customer and also to return to the customer one dollar bills given in change for five dollar bills.

The validator also includes circuit elements providing a clear switch **20** and three electrical output lines for transmitting "reject," "one dollar accept," and "five dollar accept" signals when a bill is rejected or one or five dollar bills are accepted. These reject and accept terminals of the validator are indicated at **22**, **24** and **26**. The clear switch **20** may take the form of proximity switches such as those shown in the above identified patent or photocell switches coupled with relays or solid state components which change the condition of the switch when a bill or test bill is present in the validator at any point. Clear switch **20** is illustrated in FIG. 1 in its "clear" condition with the switch arm up, and at any time that a bill is present in the validator or in the delivery belts **16** thereof, the switch arm of switch **20** moves to its lower position connected to a positive source of voltage.

The accumulator

The accumulator includes structural panels **28** rigidly attached to the structural members **10** and **12** of the validator and supporting the axles **30** of a plurality of rollers **32–56**. One endless belt is entrained over these rollers from roller **52** sequentially over rollers **34–46** and hence back to roller **52** over roller **50**. The other belt is entrained from roller **32** hence over rollers **34–48** and back to roller **32** over rollers **54** and **56**. In this way, the rollers support the two belts with a common run extending from the bite between rollers **32** and **52** hence over rollers **34**, **36**, **38**, **40**, **42**, **44** and **46** to the bite between rollers **48** and **50**. As illustrated in FIG. 1, this common run of the two belts is arranged in a serpentine path, and the length of the path is approximately twelve times the length of bills to be accepted by the accumulator plus eleven times the space which is left between those bills. The bite between the rollers **32** and **52** provides an input end to the common run which is positioned to receive bills delivered from the delivery belts **16** of the validator, and the bite between rollers **48** and **50** provides a discharge end of the common run from which bills are discharged downwardly into the mouth **58** of a strong box. The two belts **60** and **62** of the accumulator are driven by means of a reversible electric motor **64** connected by a belt **66** and pulleys **68** to the axle of roller **34**. The axle of roller **34** is also connected to the axle of roller **42** by means of drive gears **70** and **72** on those axles connected to an idler gear **74** which is mounted on a stub shaft on the support members **28** (FIG. 4).

A light source **80** and photocell switch **82** are mounted adjacent to the rollers **32** and **52** on opposite sides of the path of bills moving into those rollers for sensing the presence of a bill being presented to the accumulator. As illustrated in the upper portion of FIG. 1, the photocell switch **82** is of a type similar to the switch **20** in which the switch arm moves up to a switch open position when no bill is present between the light source **80** and photocell **82**, and the switch arm moves down to a switch closed position connected to a positive source of voltage when a bill is present between the light source and photocell.

An additional light source **84** and photocell **86** (see FIG. 1 and 4) are mounted on the structural members **28** inside the accumulator at a position to sense the fifth bill in the accumulator thereby indicating the presence of enough one dollar bills in the accumulator to give change for a validated five dollar bill. The photocell switch **68** is connected as illustrated in the upper part of FIG. 1 to close an electrical circuit when no bill is present between the light source **84** and photocell **86** and to open the circuit when a bill is present.

The diverter

A slotted roller **71** is mounted on an axle **73** between the accumulator and the bill delivery belts **16**. A pivot shaft **75** is mounted adjacent to the slotted roller **71** supported by the structural members **28** and also supporting a blade **77** best seen in FIG. 2. The blade **77** includes a pair of ears **79** extending into the slots in roller **71**, and the bulk of the blade **77** extends in between the rollers **14** as illustrated in FIGS. 1 and 2. A lever arm **81** is mounted on the shaft **75** for rocking the blade between the positions illustrated in FIG. 3, and a spring loaded solenoid operated actuator **83** is connected to the lever arm **81** for rocking the blade **77**. The actuator **83** has a spring which returns the blade **77** to the position illustrated in full line in FIG. 3, and when an electrical current is delivered to the actuator **83**, the actuator moves the blade **77** to the phantom line position of FIG. 3 where the blade intercepts the leading edge of a bill moving with the belt **16** and diverts the bill downwardly to the cash box as illustrated by the arrow **85** in FIG. 1.

An additional roller like the roller **71** may be mounted above the roller **71** in engagement therewith for gripping a bill therebetween, but it has been found that this roller may be eliminated and replaced by guide plates **87** and **88** with the guide plate **88** being provided with an aperture therethrough for the passage of light to the photocell **82** (FIG. 2).

The control circuit

As illustrated in the upper portion of FIG. 1, the electrical components of the apparatus described above are connected to additional control elements to provide automatic handing and change payout for the bills validated by the validator. These additional control elements include a validator reverse relay **90** having two arms and associated contacts, an escrow reverse relay **92** having a single arm and contacts, a five dollar accept relay **94** with two arms and associated contacts, a five position stepper switch **96**, and a plurality of diodes **98**. The stepper switch **96** is of the type in which the stepper arm is advanced one position each time an electrical pulse is applied to the coil of the stepper, and the stepper also advances from the fifth terminal to the first in response to a pulse. As illustrated in the drawing, the second through the fifth terminals of the stepper are connected together and connected to the source of positive voltage.

Currency validators of the type mentioned in the above identified patent are frequently used in dollar bill change making machines which contain a solenoid operated plunger which moves to dispense one dollars worth of coin change in response to an electrical pulse. The apparatus of this invention preferably includes such a one dollar change payout device as indicated at **100** in FIG. 1.

As will be appreciated by those skilled in the art, the control circuit illustrated in FIG. 1 includes mechanically operating switch devices such as relays, switches and the stepper switch, but these devices may be replaced by solid state circuit components.

Operation

With reference to FIG. 1, the apparatus illustrated therein operates as follows: When a one dollar bill is presented to the validator **10** it passes through the validator between the belts **16**, and while it is in the validator the switch **20** closes to its arm down positions supplying voltage through relay **90** to drive the validator drive motor **18** forward. While the switch **20** is still in this condition, a one dollar accept signal is conducted along line **24** to energize the payout device **100** and dispense one dollars worth of change. The clear switch **20** keeps the validator motor **18** operating forward until the one dollar bill has cleared the belt **16** and has closed the photocell switch **82** which in turn drives the accumulator motor **64** forward until the trailing edge of the bill clears the photocell **62**. If a reject signal is generated prior to a one dollar accept signal, the reject signal energizes relay **90** to drive the validator motor **18** in reverse, and the valida-

tor motor **18** is held in reverse until the clear switch **20** opens.

When a five dollar bill passes through the validator and is accepted, the validator motor **18** is driven forward until the clear switch **20** opens. While the clear switch **20** is in its arms down position, a five dollar accept signal is conducted along line **26** which energizes relay **94** and simultaneously operates change payout device **100**. It will be noted that switch **86** connected between the five dollar accept line and the relay **90** will cause the relay **90** to be energized with a reject signal by the five dollar accept signal if there are insufficient bills in the accumulator to permit four one dollar bills to be given out in change. Additionally, the operation of payout devices **100** is slightly delayed so that one dollar change will not be delivered if the five dollar bill is rejected for inadequate supply of one dollar bills.

Thus, while the switch **20** is in its arm down position, the relay **94** is energized by a five dollar accept signal and one dollar in coin change dispensed. The relay **94** is held energized by its own arms through switch contacts of relay **90** and the output of this circuit also energizes the device **83** which lifts the diverter blade **77** to divert the five dollar bill downwardly along the path of arrow **85**. The validator motor continues in forward operation until the clear switch **20** clears and moves to its arm up position at which positive voltage from one of the switch arms of relay **94** passes through switch **20** to start driving the escrow motor **64** in reverse and to operate the escrow motor reverse relay **92**. The escrow motor **64** continues in reverse operation (the validator motor **18** is still running forward) until the leading edge of a bill passes over the photocell switch **82** and causes the photocell switch **82** to close and connect positive voltage through the switch arm of relay **92** to the coil of the stepper switch **96**. This causes the stepper to move one step to contact number two which applies positive voltage to the reject line **22** thereby throwing the validator drive motor into reverse and deenergizing the five dollar accept relay **94**. It should be noted that the validator drive motor **18** will now be held in reverse as long as the stepper switch **96** is in any one of its second through fifth positions because both switch contacts of the clear switch **20** are connected to power.

As the leading edge of the second bill passes photocell switch **82**, the stepper is pulsed from its second to its third contact. As the leading edge of the third bill passes the photocell **82**, the stepper is pulsed from its third to its fourth contact, and as the leading edge of the fourth bill passes the photocell switch **82**, the stepper is pulsed from its fourth to its fifth contact. These four bills which have been dispensed from the accumulator will continue in reverse through the delivery belt **16** of the validator to be passed through the validator pack to the customer. As the leading edge of the fifth bill in the validator passes the photocell switch **82**, the stepper **96** is pulsed from its fifth contact back to its first contact, and this removes power from the escrow motor reverse relay **92** causing this relay to return to its relaxed position and drive the escrow motor **64** forward until the fifth bill is returned into the accumulator clear of the photocell switch **82**. The escrow motor **64** will shut down in this manner while the four bills being dispensed are still returning through the validator to the customer, and when the four bills clear the validator, the switch **20** moves to its arm up position returning the control circuit to its original condition where it can accept additional one dollar bills, and if five one dollar bills are still present in the accumulator, the device can accept an additional five dollar bill.

While certain features and advantages of the invention have been described in detail herein, it is obvious that many modifications thereof may be made without departing from the spirit and scope of the invention.

We claim:

1. In apparatus for recognizing paper currency having delivery means for delivering an accepted bill along a predetermined path, the improved escrow device comprising a pair of endless belts having the majority of their lengths positioned adjacent to each other and forming a common belt run which has a length equal to between four and twenty-five times the length of bills to be held thereby with a minority of the length of each belt forming a return run extending from one end of said common run back to the other end of said common run, a plurality of rollers supporting said belts and including rollers supporting said common run of said belts under tension in a serpentine path whereby bills positioned between said belts in said common run will be gripped by said belts and moved along said common run when said belts are moved, said rollers having entry rollers positioned at one end of said common run and exit rollers positioned at the other end of said common run with said entry and exit rollers supporting the ends of said common run and guiding said return runs of said belts into and out of said common run, means supporting said entry rollers adjacent to said delivery means for receiving bills from said delivery means and gripping said bills between said belts in said common run, means supporting said exit rollers remote from said delivery means for discharging bills from said common run, drive means for at least one of said rollers for moving said common run along its length between said entry and exit rollers, and bill diverter means between said delivery means and said entry rollers for diverting bills of higher denominations from said entry rollers whereby only bills of lower denomination are accumulated in said escrow means.

2. The apparatus of claim **1** characterized further by the inclusion of reversing means for said drive means, whereby bills of lower denominations accumulated in said escrow means are delivered back to said delivery means for change for bills of higher denominations.

3. The apparatus of claim **1** characterized further by the inclusion of a light source on one side of the path of bills through said escrow device and a photosensitive detector on the other side of said path for counting bills in said path.

4. The apparatus of claim **2** characterized further by the inclusion of control means for driving said drive means forward when said delivery means is operated and preventing forward motion of said drive means when said delivery means is stopped and when said diverter means is operated.

5. In apparatus for recognizing paper currency having delivery means for delivering along a predetermined path first bills of a higher denomination and second bills of a lower denomination while generating corresponding first and second electrical signals indicating the validation of said first and second bills, the improved means for storing said bills which comprises:

(A) bill accumulator means positioned adjacent to said path for accepting bills delivered thereto and sequentially advancing and physically supporting said accepted bills in series;

(B) a strong box for holding bills in random physical condition;

(C) bill diverter means positioned between said delivery means and said accumulator means and movable between a first position for passing bills from said delivery means to said accumulator means and a second position for diverting bills from said delivery means to said strong box;

(D) control means connected to said diverter means and said validator for moving said diverter means to said second position responsive to said first electrical signal, and

(E) control means for said accumulator means for advancing said accumulator means when a bill passes thereto from said diverter means.

6. The apparatus of claim **5** characterized further by the inclusion of control and counting means for said ac-

cumulator means for delivering a predetermined number of bills from said accumulator means responsive to the generation of said first electrical signal whereby a plurality of said second bills previously validated by said validator and accumulated by said accumulator are delivered as change for one of said first bills.

7. The apparatus of claim 6 in which said control and counting means includes reverse drive means for said accumulating means for delivering said bills from said accumulating means back to said delivery means.

8. The apparatus of claim 7 in which said accumulator means comprises a pair of endless belts supported together with a common run thereof arranged in a serpentine path wtih said common run having an input end adjacent to said diverter means, a discharge end adjacent to said strong box, and a length of between four and twenty-five times the length of a bill presented thereto by said diverter means.

References Cited

UNITED STATES PATENTS

2,269,117	1/1942	London	194—4
2,936,170	5/1960	Herrick et al.	271—6 X
3,072,237	1/1963	Simjian	133—1 X
3,108,680	10/1963	Ellis et al.	133—1 X

SAMUEL F. COLEMAN, *Primary Examiner.*