Feb. 10, 1931. R. S. PEELLE 1,792,119

WAREHOUSE DOOR

Filed Oct. 10, 1927 2 Sheets-Sheet 1

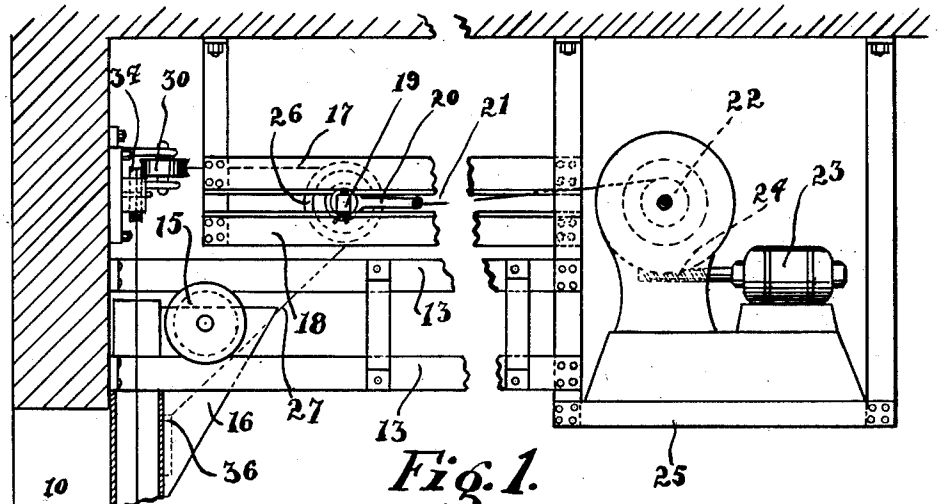


Fig. 1.

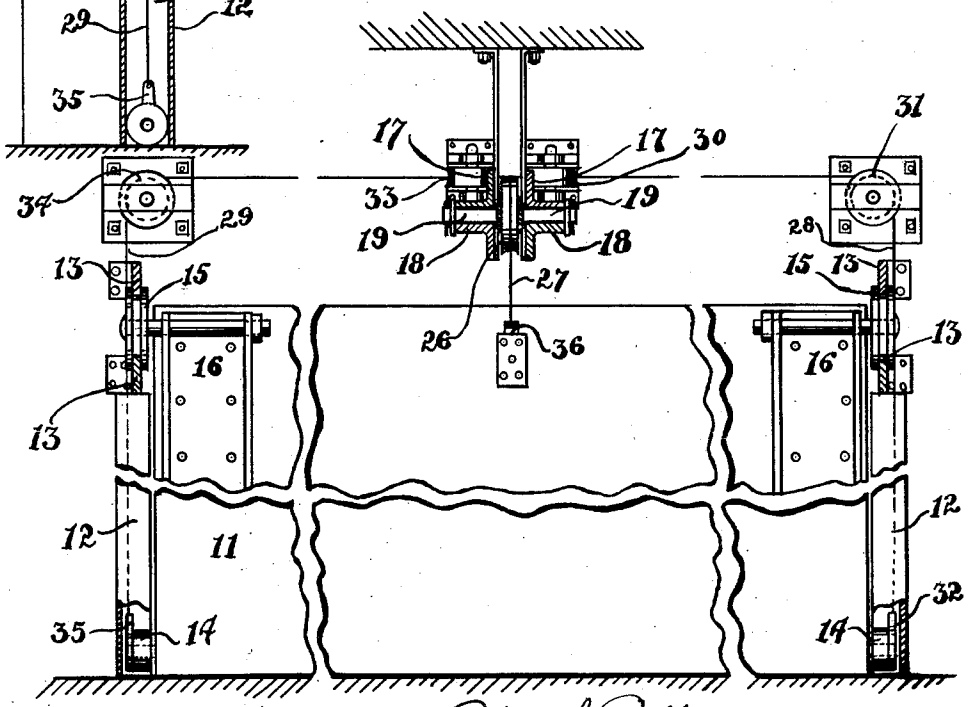


Fig. 2.

Robert S. Peelle INVENTOR

BY Frank P. Wentworth ATTORNEY.

Feb. 10, 1931. R. S. PEELLE 1,792,119

WAREHOUSE DOOR

Filed Oct. 10, 1927 2 Sheets-Sheet 2

Fig. 3.

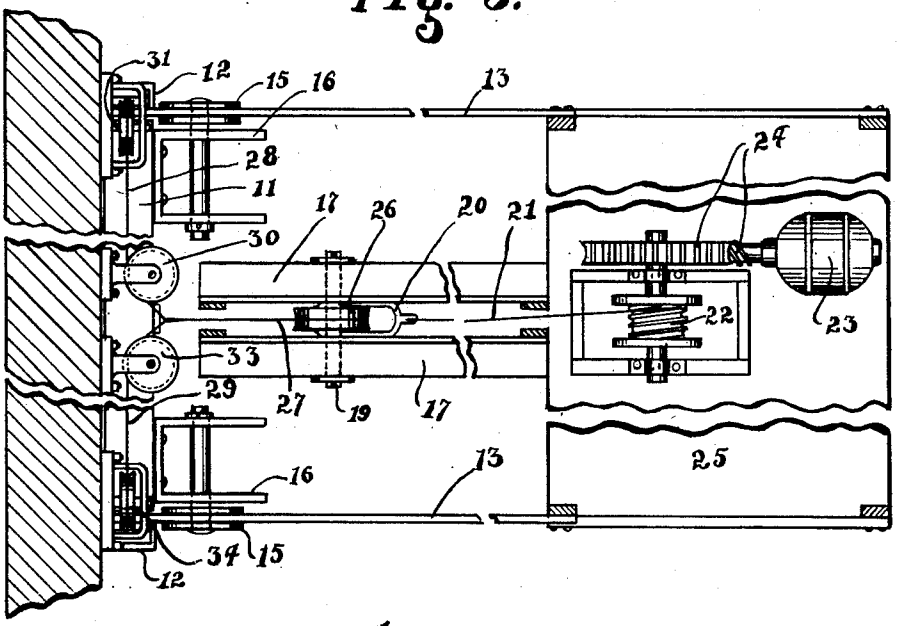


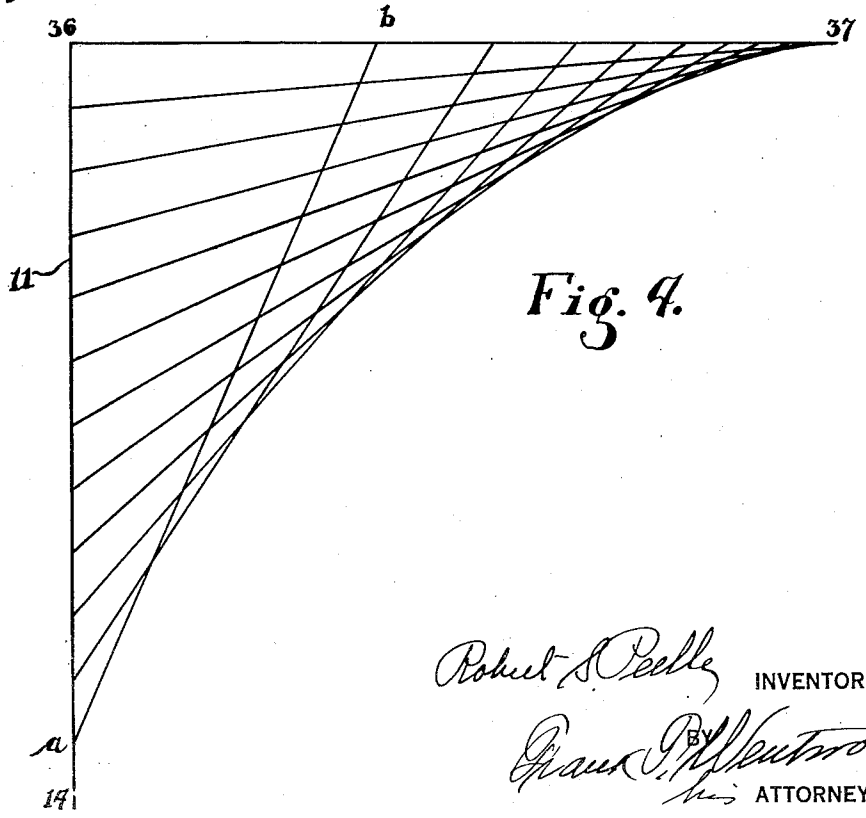


Fig. 4.

Robert S. Peelle INVENTOR

BY Grant P. Wentworth

ATTORNEY

Patented Feb. 10, 1931 1,792,119

# UNITED STATES PATENT OFFICE

ROBERT S. PEELLE, OF HOLLIS, NEW YORK, ASSIGNOR TO THE PEELLE COMPANY, OF BROOKLYN, NEW YORK, A CORPORATION OF NEW YORK

## WAREHOUSE DOOR

Application filed October 10, 1927. Serial No. 225,166.

My invention relates to warehouse doors, and more particularly to doors of the so-called "trolley" type.

Doors of the trolley type, as usually constructed, are made in a single section or panel, the lower portion of the door being provided with bearing members moving in substantially vertical guideways, and the upper portion of the door being provided with bearing members moving in substantially horizontally extending guideways adjacent the ceiling of a floor of a building. Such doors are customarily used for closing the openings upon loading platforms, the street floor of buildings, wharves or other similar locations where large openings are present, and it is desirable to utilize the floor space adjacent the doors for the storage of merchandise, as such doors, during their opening and closing movement, require but little space adjacent the door opening to accommodate the movements of the door.

Heretofore, in such doors, it has been the common practice to apply the power for opening the door at opposite sides adjacent the bottom thereof, the movements of the upper portion of the door being defined by the overhead track structure as a result of the upward movement of the lower portion of the door.

Doors of this type are usually large, heavy doors not infrequently having a height of 12 to 15 feet, a width of 20 to 30 feet and a weight of a ton or more. While with the old actuating mechanisms for such doors, the weight of the door, during its opening and closing movements, was divided between the overhead trolley tracks and the actuating cables, it was the practice to ensure ease in the starting of the doors when opening same, and to ensure a complete closing of the door, to provide the overhead or trolley guideways with an inclined section adjacent the wall of a building, so that during the initial turning movement of the door the entire load thereof came upon the actuating cable, little or no support being afforded the door while the rollers adjacent the top thereof were traversing this inclined section.

With the above conditions in mind I have provided a warehouse door of the trolley type in which both the top and the bottom thereof will have power applied thereto simultaneously from a single source of power, the actuating mechanism embodying therein an equalizing device which will compensate for the varying ratio of movement of the top and the bottom of the door. This actuating means is so constructed and arranged that it will simultaneously impart a vertical lift to the lower portion of the door, and a substantially horizontal travel to the upper portion thereof, thus permitting the upper portion to be guided by substantially horizontal guideways or tracks, avoiding any material vertical component of movement of the upper portion of the door during either the initial opening or the final closing thereof, and ensuring a constant support of at least a portion of the load of the door from these guideways or tracks at all times.

The actuating mechanism embodied in my invention, not only ensures a desired ease during the starting of the opening movement of the door, and avoids any possible binding of the bearing members and the guideways therefor, but by reason of the utilization of the equalizing mechanism above referred to, permits the quick opening and closing of the door with a length of movement of said mechanism approximating the height of the door opening.

While, if desired, counterweighting means may be used to relieve the actuating motor from a portion of the load of the door, this is not essential where the upper portion of the door is constantly supported from the overhead or trolley guideways.

The invention consists primarily in a warehouse door embodying therein substantially vertical and substantially horizontal guides, a door panel, bearing members adjacent the bottom and top thereof co-operating respectively with said vertical and said horizontal guides, a traveler, means whereby lineal traverse may be imparted thereto, an equalizing member upon said traveler, and flexible connections acted upon by said equalizing member, portions of said connections upon opposite sides of said member being connected respectively with the lower and the upper

portions of said door panel; and in such other novel features of construction and combination of parts as are hereinafter set forth and described, and more particularly pointed out in the claims hereto appended.

Referring to the drawings,

Fig. 1 is a side view of a warehouse door and the actuating mechanism therefor embodying my invention;

Fig. 2 is a view from the right of Fig. 1;

Fig. 3 is a plan view thereof; and

Fig. 4 is a diagram illustrating different positions of the door during the opening and closing movements thereof.

Like numerals refer to like parts throughout the several views.

In the embodiment of the invention shown in the drawings, the door opening 10 is adapted to be closed by a single door section or panel 11 of the usual fireproof or any desired construction. This panel has dimensions, which when the door is closed, bring the lower edge thereof in substantial contact with the floor of the building, and cause the opposite side and the top thereof to overlap the jambs and the lintel of the door opening 10.

Adjacent the opposite jambs of the door opening 10, are substantially vertically extending guideways or tracks 12 which ordinarily are of channel metal, but which may be of any desired construction. Supported adjacent the ceiling of the floor at which the door opening 10 is located, and usually above the lintel of said opening, are substantially horizontal guideways or trolley tracks 13 located respectively adjacent opposite edges of the door panel 11.

Adjacent the bottom of the door panel 11 at the opposite side edges thereof, are bearing members, preferably in the form of antifriction rollers 14, projecting into and cooperating with the vertical guideways or tracks 12.

Adjacent the top of the door sections are similar bearing members, in the form of rollers 15, idly mounted in bearings carried by brackets 16 secured to the inner or building side of the door, which rollers cooperate with the guideways or trolley tracks 13.

The guideways or tracks 13 each consist of parallel spaced rails adapted to receive the rollers 15 therebetween, the said rollers being of a diameter to permit that clearance necessary for a free turning thereof. One trolley track structure is located at one side of the door opening, and the other at the other side thereof, the spacing of said tracks in relation thereto being preferably such as to position the rollers 15 beyond the side of the door in a manner shown more particularly in Figs. 2 and 3 of the drawings. Since the power for opening the doors is applied by the actuating mechanism toward both the top and the bottom thereof, the trolley tracks or guideways 13 may extend in a straight horizontal line above the lintel of the door opening, although any construction or arrangement of guideways or tracks 13 may be employed which will permit the application of power in substantially a horizontal plane. With the construction shown in the drawings, where ample space is available in the building adjacent the door opening, the arrangement is such as to bring all of the parts of the actuating mechanism within the building. This general arrangement, however, is determined largely by the available space and is subject to wide variation according to the conditions under which installations must be made.

Supported from the ceiling of the building by means of any desired form of brackets are two pairs of angle bars 17 and 18, the bars of each pair being so spaced as to accommodate a slide member 19 carried by a traveler 20, and each pair being spaced from the other to afford a clear path for movement of the traveler 20. This traveler member 20 is the medium for imparting opening movement to, and permitting closing movement of, the door 11, and has connected therewith a rope, cable or other flexible connection 21 extending to and acted upon by a sheave 22, preferably having a helically grooved face as shown more particularly in Fig. 3. This form of sheave is used as it ensures a substantially continuous rate of movement of the traveler 20, but is not essential to the invention. The sheave 22 is driven in any desired manner from the motor 23, as by means of the worm wheel and worm shaft mechanism 24. Said motor and said sheave are supported on a hanging platform 25 so as to bring the sheave in substantial alinement with the guides for the traveler 20.

The general construction and arrangement of the motor 23 and power transmitting mechanism 24 is that commonly used with full automatic elevator doors, and the details of construction thereof form no part of the present invention and are therefore not shown nor described. In fact the mechanism is capable of wide variation.

The traveler 20 is provided with an equalizing device consisting of a pulley or sheave 26 idly mounted upon and movable with said traveler. Passing about this equalizing member is a cable, rope or other flexible connection, one end 27 of which is connected with the upper portion of the door panel 11 intermediate the side edges thereof, and the other end of which is provided with two extensions 28 and 29 which pass respectively about guide pulleys 30 and 31 to a shackle or fitting 32 adjacent the roller 14 at one side of the door panel 11, and about the guide sheaves 33 and 34 to a shackle or fitting 35 adjacent the roller 14 upon the other side of said door panel. Said fittings or shackles 32 and 35 are pivotally mounted upon the axis for said rollers

14 so as to permit them to accommodate themselves to the constantly varying angle of the door during either the opening or the closing movement thereof. Any other desired means of connecting the ropes or cables 28 and 29 with the lower portion of the door section may be employed however, the construction shown being an expedient ordinarily used in this art.

The guide sheaves 30 and 33 are located with relation to the longitudinal center of the guides controlling the movements of the traveler 20.

The end 27 of the rope, cable or other flexible connection passes from the point 36 of its connection with the door panel 11 about the equalizing pulley or sheave 26, beyond which the two extensions 28—29 pass respectively about the guide pulleys 30—31 and 33—34 to the shackles or other attaching means 32 and 35. The pulleys 31 and 34 are positioned one above each vertical track 12.

The operation of the herein described mechanisms are substantially as follows:—

When the door is in the closed position the traveler 20 will be at a point of the bars 17 and 18 of each pair, toward the wall of the building, and the pulley or sheave 26 will engage the flexible connections 27, 28 and 29 at a point intermediate the ends of said connections, the door panel 11 being in its lowermost position, closing the opening 10.

The offset relation of the rollers 15 with the inner vertical plane of the door panel, is desirable although not essential. This construction permits the utilization of larger doors and facilitates a close fitting of the door panel in relation to the wall of a building about the door opening 10.

When it is desired to open the door it is merely necessary to apply power to the motor 23 and through the mechanism 24 to the sheave 22. The rotation of the latter will take up the rope, cable or other flexible connection 21 and thus impart movement to the traveler 20 towards the motor. As said traveler moves, it carries with it the equalizing pulley or sheave 26, this pulley or sheave having no rotary movement except what is required to secure the equalizing effect, which is more fully referred to hereinafter.

The stresses applied to the flexible connections 27, 28 and 29, as a result of the movement of the traveler 20 and sheaves 26, will apply power simultaneously to the lower portion of the door panel 11, and to the upper portion thereof, the former being by a vertical pull upon the door, and the latter being by a substantially horizontal pull thereon.

During the opening movement of the door, there is a constant variation in the relative quantity of horizontal movement of the upper portion of the door and of the vertical movement of the lower portion thereof, and the purpose of the equalizing pulley or sheave 26 is to compensate for this constantly varying relative movement, and ensure the proper application of power adjacent the top and the bottom of the door panel.

During the early stages of the opening movement of the door, the portion of the door indicated at 36 will have relatively much greater horizontal movement than the vertical movement of the door at the shackles 32 and 35. In fact during the first stages of the opening movement this difference will be approximately 5 to 1. With the continued upward movement of the door this ratio will be rapidly reduced until, during the final stages of the opening movement, the condition will be substantially reversed.

During the closing of the door, the conditions will be reversed, in that during the early stages of said movement, the vertical movement of the lower portion of the door adjacent the shackles 14, will be relatively greater than the horizontal movement of the upper portion of the door. With continued downward movement, this ratio will be rapidly reduced until, during the final stages of the closing movement, the upper portion of the door will have relatively much greater movement than the lower portion thereof.

During the complete opening and closing movements of the door, the upper portion thereof will have substantially no vertical component aside from that resulting from its pivoting about the axis of the rollers 15.

Fig. 4 illustrates, diagrammatically, the position of the door panel when it is in the closed position, and the different positions it assumes with succeeding equal upward or downward movements of the lower portion of the door. In this view, each of the lines indicates the door panel 11. The point 36 indicates the point of the panel where the connection 27 is attached. 14 indicates the point of attachment of the shackles 32 or 35. The line 14—36 indicates the position of the door in the closed position, and the line 36—37, its position in the fully open position. It will be noted that the line 14—36 is vertical, the inclined lines indicating different positions assumed by the panel 11 during the opening and closing of the door.

The line *a*—*b* indicates the position which the door panel 11 has assumed when the point 14 has risen one-twelfth of the opening movement of the door. It will be noted that the ratio of the line 14—*a* to the line 36—*b* is approximately 1 to 5. To secure this quantity of movement, the traveler 20 will have moved practically one-fourth of its total quantity of movement, and were it not for the utilization of the equalizing pulley or sheave 26, it would be impossible to thus apply power at both the top and the bottom of the door, since the quantity of the flexible connections 28 and 29 taken up was only one foot, while the quantity of the flexible con-

nection 27 taken up was approximately five feet.

Of the five feet of connection 27 taken up, four feet are paid out toward the portions 27 and 28 of said connections, the equalizing pulley having a contra-clockwise movement during this stage in the movement of the door. This simultaneous taking up and paying out of the flexible connections, the opposite ends of which are respectively secured to the door adjacent the bottom thereof and adjacent the top thereof, secures the desired equalization or distribution of the application of power toward both the top and the bottom of the door. The relatively short movement of the traveler, as compared with the movement of the upper portion of the door during this stage of the opening movement, is no factor so far as the total movement of the traveler is concerned, since, as will appear hereinafter, during later stages of the opening, such movement of the traveler is relatively much greater than that of the upper portion of the door. In fact the traveler preferably has a uniform speed throughout its entire range of movement, although the vertical movement of the door will vary with a progressively increasing speed with the opening movement of the door, and a progressively decreasing speed with the closing movement thereof.

During the second stage of one-twelfth movement of the total vertical movement of the door, the ratio of the horizontal movement of the upper portion of the door, as compared with the vertical movement of the lower portion thereof, will be approximately 2 to 1, and this ratio will progressively decrease until the door has completed about one-quarter of its movement. During the following movement of one-twelfth in excess of this one-quarter movement, the top and the bottom of the door will travel at substantially the same speed, one horizontally and the other vertically. During the succeeding stages of movement of one-twelfth of the total movement of the door, the ratio of movement of the upper portion thereof, as compared with the lower portion thereof, will rapidly decrease, as indicated in the diagram, Fig. 4.

With the closing of the door, the speed ratios will be substantially the reverse of those heretofore described, the lower portion of the door having a relatively quick movement as compared with the top thereof, during the early stages of the closing movement, and there being a gradual slowing down of the vertical movement of the lower portion of the door as it approaches the fully closed position.

During the initial opening movement of the door, the application of power adjacent the top thereof will ensure ease in the starting movement of the door unaccompanied by any substantial lifting action of the door in its entirety. During the continued opening movement of the door there will be a distribution of the application of power to the door according to the resistance offered by the weight of the door at the shackles 32 and 35, and the resistance to horizontal movement at the upper portion of the door encountered by the rollers 15. The resistance to horizontal movement at the upper portion of the door will be very slight as compared with the tendency of the upper portion of the door to move away from the traveler as a result of the gradually increasing load applied to the connections due to the changing angularity of the door during this movement. The foregoing condition results from the gradually increasing leverage at which the door acts because of the movement of the rollers 15 along the tracks 13 away from the vertical guides 12. When the door is in the fully closed position, the entire weight thereof is supported from the track 13. With such movement of the rollers 15, a portion of the weight of the door only will be supported by said rollers, and the balance of the weight will be thrown upon the connections 29, and the proportion of weight which is thrown upon these connections 29 will increase progressively with increasing movement of the rollers 15 away from the guides 12. During the opening movement this progressively increasing load upon the connections 29 will actually assist in imparting movement to the upper portion of the door, since the support of the door by the connections 29 will have a tendency to induce a tilting action of the door in the direction of movement of the traveler. Hence the weight of the door actually assists in ensuring ease of movement throughout the major portion of the opening thereof, as well as during the closing movement. The constantly varying load upon the connections 29, between the traveler and the bottom of the door, will aid the traveler in imparting horizontal movement to the upper portion of the door during the opening thereof with progressively increasing effect. It will also aid in imparting horizontal movement to the upper portion of the door during the closing movement of the door, but with a progressively decreasing effect so as to check the development of moving inertia during such closing movement, it having little or no effect during the final stage of the closing movement.

During the movement of the traveler 20 upon the opening of the door, the equalizing pulley or sheave 26 will, during the early stages of this movement, have a contra-clockwise movement until a point is reached when both the top and the bottom of the door are traveling at substantially the same speed, one with a horizontal, and one with a vertical trend. During the last named interval, the pulley or sheave will have no rotary move-

ment whatever. During the final stages of the opening movement, however, when the lower portion of the door is having a vertical movement greater than the horizontal movement of the upper portion thereof, the pulley or sheave will have clockwise movement. While the pulley or sheave is rotating, its speed will vary according to the speed ratio of the upper and lower portions of the door. During the closing of the door, during the initial stages, the pulley or sheave 26 will have a contra-clockwise movement with a varying speed, as during the opening movement of the door, a stage during which it will have no rotary movement, and then a stage toward the completion of the closing movement when it will have clockwise movement with a varying speed during the increase in ratio of the horizontal movement of the upper portion of the door as compared with the vertical movement of the lower portion of the door.

In starting the closing movement, the substantially horizontal position of the door adjacent the ceiling will cause the application of the load of the door to the traveler for initiating this movement, so that no power is required to start the door, but merely the paying out of the connection 21 by the sheave 22. This may be controlled by a reverse drive of the motor, or in any other desired manner.

As the door, during the closing movement, approaches its fully closed position, the load upon the flexible connections 28 and 29 will be very much reduced by reason of the change of angularity of the door and thus ensure ease in the final closing of the door.

The speed ratios above referred to are merely given by way of example as illustrating the mode of operation of the herein described mechanisms, but it will be understood that during each of the stages specified, there will be a varying speed. For example, in the first foot of horizontal movement in the upper portion of the door, during the initial movement there will be a very short rise of the bottom of the door, the ratio of the horizontal movement to the vertical movement being possibly, 10 to 1, which ratio progressively decreases until, when the door is in the position *a*—*b*, the ratio will be substantially as stated. The figures given, however, will suffice to make it plain what the working conditions of the door actually are as a result of the continuous connections 27, 28 and 29 having their opposite ends attached respectively adjacent the top and adjacent the bottom of the door, and acted upon intermediate these ends by a traveler mechanism as described.

The pulley or sheave 26 is used to avoid slippage of the connections over a fixed part of the traveler mechanism which would result in undue wear upon these connections, particularly when the doors are of heavy construction, as is usually the case.

It will be noted that support is afforded the upper portion of the door at all times by the lower guideways or tracks 18, and that any tendency of upward movement of the door in its entirety is restrained by the upper guides or tracks 17. The use of the lower tracks 18 serves to guide the upper portion of the door, while the upper tracks 17 are merely guard rails.

With the construction herein described, there is attained a counterbalancing action of one part of the door panel by another part thereof, to the extent that the run of the connections 27, 28 and 29 about the equalizing mechanism of the traveler would, except for the movement of the traveler, result only in the development of counter stresses at the top and at the bottom of the door. By way of example, the traveler may be stopped at any point of its movement and the door will remain in the position it was in at the moment of the stoppage of the traveler, notwithstanding that the connections are free to run about the sheave or pulley 26, since the weight of the door applied at the shackles 14 to the connections will develop a pull at the point 36 equalling the load of this weight. Thus movement of the upper portion of the door, necessary to a downward movement of the lower portion thereof, is prevented.

In most warehouses, or similar structures, there is ample space to allow for a run of the traveler for a distance equalling the height of the door, but if the building design is not such as to afford this space, the same general construction and mode of operation may be preserved by variation in the arrangement of tracks forming the guideways and guide rollers or sheaves, and in the power applying mechanism for imparting movement to the traveler.

It is therefore not my intention to limit the invention to the precise details of construction shown in the accompanying drawings, it being apparent that such may be varied without departing from the spirit and scope of the invention.

Having described the invention, what I claim as new and desire to have protected by Letters Patent, is:—

1. A warehouse door embodying therein substantially vertical and substantially horizontal guides, a door panel, bearing members adjacent the bottom and top thereof co-operating respectively with said vertical and said horizontal guides, a traveler, means whereby lineal traverse may be imparted thereto, an equalizing member upon said traveler, and flexible connections acted upon by said equalizing member, portions of said connections upon opposite sides of said member being connected respectively with the

lower and the upper portions of said door panel.

2. A warehouse door embodying therein substantially vertical and substantially horizontal guides, a door panel, bearing members adjacent the bottom and top thereof co-operating respectively with said vertical and said horizontal guides, a traveler, means whereby lineal traverse may be imparted thereto, a sheave idly mounted upon said traveler, and flexible connections passing about said sheave, portions of said connections upon opposite sides of said sheave being connected respectively with the lower and the upper portions of said door panel.

3. A warehouse door embodying therein substantially vertical and substantially horizontal guides, a door panel, bearing members adjacent the bottom and top thereof co-operating respectively with said vertical and said horizontal guides, a traveler, substantially horizontally extending tracks for said traveler positioned adjacent the ceiling of a building, an electric motor, a sheave driven therefrom, a flexible connection acted upon by said sheave and connected with said traveler, said motor and said sheave being mounted upon a platform adjacent the ceiling of a building, an equalizing member upon said traveler, and flexible connections acted upon by said equalizing member, portions of said connections upon opposite sides of said member being connected respectively with the lower and the upper portions of said door panel.

4. A warehouse door embodying therein substantially vertical and substantially horizontal guides, a door panel, bearing members adjacent the bottom and top thereof co-operating respectively with said vertical and said horizontal guides, a traveler, substantially horizontally extending tracks for said traveler, positioned adjacent the ceiling of a building, an electric motor, a sheave driven therefrom, a flexible connection acted upon by said sheave and connected with said traveler, said motor and said sheave being mounted upon a platform adjacent the ceiling of a building, a sheave idly mounted upon said traveler, and flexible connections passing about said sheave, portions of said connections upon opposite sides of said sheave being connected respectively with the lower and the upper portions of said door panel.

5. A warehouse door embodying therein substantially vertical guides adjacent each jamb of a door opening, parallel spaced rails about the sides of a door opening and adjacent the lintel thereof, a door panel, bearing members adjacent the bottom thereof, said panel co-operating with said vertical guides, brackets adjacent the top of the door opening, rollers offset from said panel by said brackets and mounted between the parallel guides of each of said horizontal guide structures, a traveler, means whereby lineal traverse may be imparted thereto, an equalizing member upon said traveler, and flexible connections acted upon by said equalizing member, portions of said connections upon opposite sides of said member being connected respectively with the lower and the upper portions of said door panel.

6. A warehouse door embodying therein substantially vertical guides adjacent each jamb of a door opening, parallel spaced rails about the sides of a door opening and adjacent the lintel thereof, a door panel, bearing members adjacent the bottom thereof, said panel co-operating with said vertical guides, brackets adjacent the top of the door opening, rollers offset from said panel by said brackets and mounted between the parallel guides of each of said horizontal guide structures, a traveler, means whereby lineal traverse may be imparted thereto, a sheave idly mounted upon said traveler, and flexible connections passing about said sheave, portions of said connections upon opposite sides of said sheave being connected respectively with the lower and the upper portions of said door panel.

7. A warehouse door embodying therein actuating means for a door having a single panel, comprising flexible connections, the opposite ends of which are so guided in relation to, and connected with, the door panel adjacent the top and adjacent the bottom thereof so as to simultaneously cause or permit the lower portion of the door to have substantially vertical movement, and the upper portion of the door to have substantially horizontal movement, a traveler operative upon said flexible connections intermediate its ends, and means actuating said traveler.

8. A warehouse door embodying therein substantially vertical and substantially horizontal guides, a door panel, bearing members adjacent the bottom and top thereof co-operating respectively with said vertical and said horizontal guides, a traveler, means whereby lineal traverse may be imparted thereto, a sheave idly mounted upon said traveler, a flexible connection, one end of which is connected with the upper portion of said panel, the other end of which has two extensions connected respectively adjacent the opposite sides of the lower portion of said panel, and guide pulleys for directing the run of said extensions respectively.

9. A warehouse door embodying therein substantially vertical and substantially horizontal guides, a door panel, bearing members adjacent the bottom and top thereof co-operating respectively with said vertical and said horizontal guides, a traveler, substantially horizontally extending tracks for said traveler positioned adjacent the ceiling of a building, an electric motor, a sheave driven

therefrom, a flexible connection acted upon by said sheave and connected with said traveler, said motor and said sheave being mounted upon a platform adjacent the ceiling of a building, a sheave idly mounted upon said traveler, a flexible connection, one end of which is connected with the upper portion of said panel, the other end of which has two extensions connected respectively adjacent the opposite sides of the lower portion of said panel, and guide pulleys for directing the run of said extensions respectively.

In witness whereof I have hereunto affixed my signature this 7th day of October, 1927.

ROBERT S. PEELLE.