Sept. 13, 1927. 1,642,663

E. L. CHAFFEE

SYSTEM OF RADIO COMMUNICATION

Filed Aug. 11, 1922 2 Sheets-Sheet 1

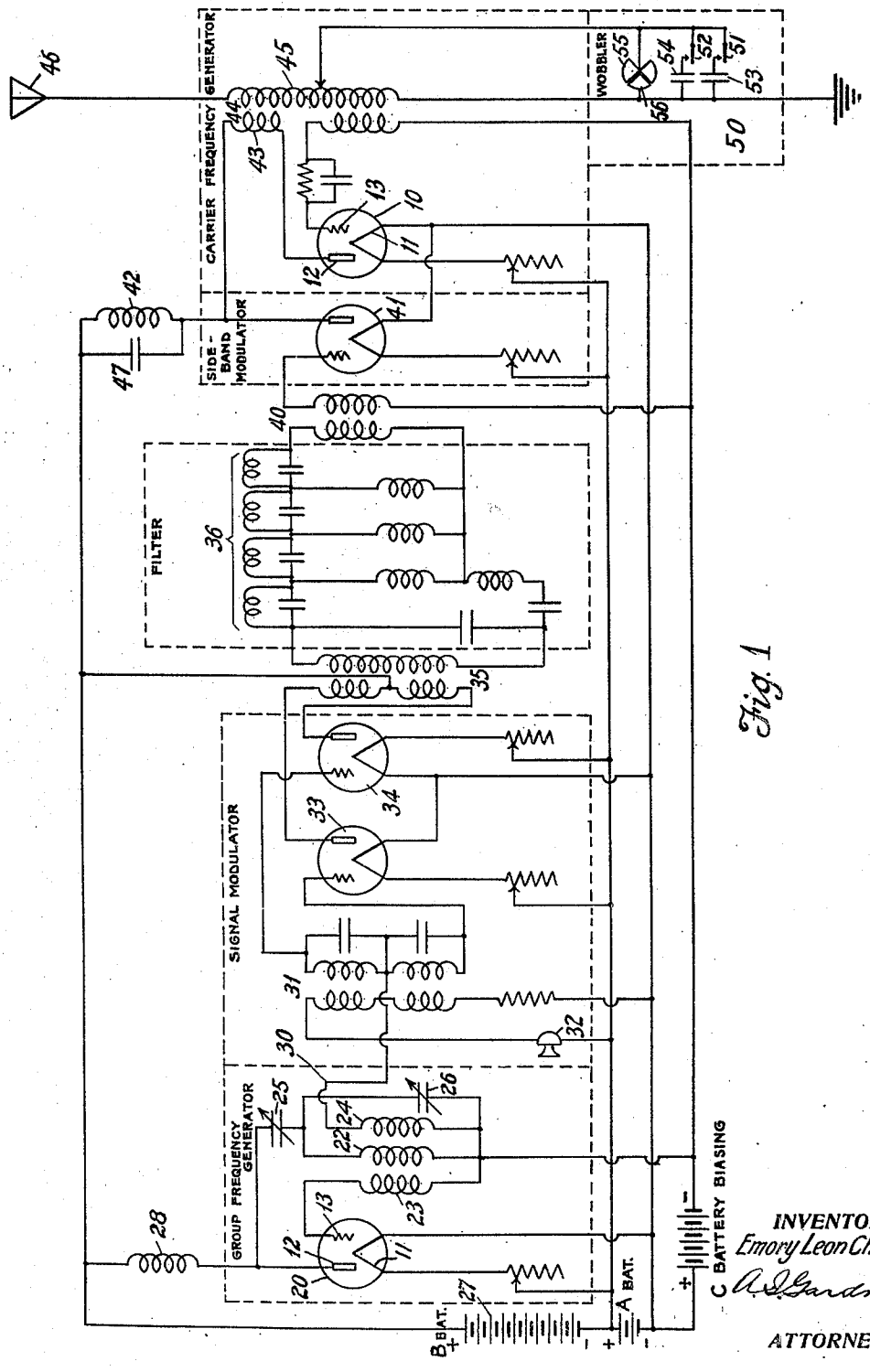

Fig. 1

INVENTOR
Emory Leon Chaffee
A. D. Gardner
ATTORNEY

179-1.5X

From 250-6.6.5

Sept. 13, 1927. 1,642,663

179-1.5R 22

E. L. CHAFFEE

SYSTEM OF RADIO COMMUNICATION

581 280

Filed Aug. 11, 1922 2 Sheets-Sheet 2

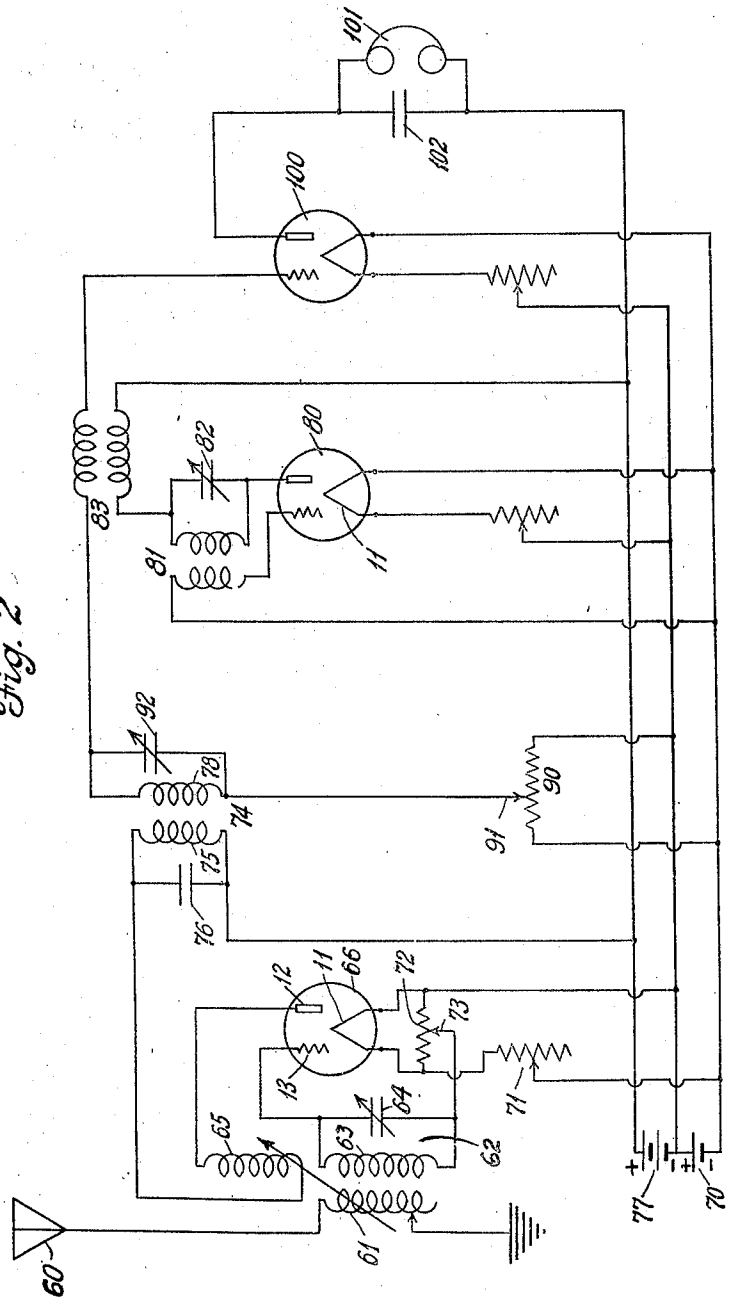

Fig. 2

INVENTOR.
Emory Leon Chaffee
BY A. J. Gardner
ATTORNEY

Patented Sept. 13, 1927. 1,642,663

UNITED STATES PATENT OFFICE.

EMORY LEON CHAFFEE, OF BELMONT, MASSACHUSETTS, ASSIGNOR TO JOHN HAYS HAMMOND, JR., OF GLOUCESTER, MASSACHUSETTS.

SYSTEM OF RADIOCOMMUNICATION.

Application filed August 11, 1922. Serial No. 581,280.

This invention relates to the transmission of intelligence by radiant energy, and more particularly to systems for secret radio telephony

An object of this invention is to provide a system comprising a sending station arranged to emit radiant energy of a peculiar character, and a coordinating receiving station provided with apparatus responsive to energy having the peculiarities of the emitted energy.

A further object of the invention is to provide a simple arrangement for the emission of radiant energy in the form of oscillations having a fundamental frequency which may be wobbled, said oscillations being modulated at one or more lower supersonic frequencies, and each of said supersonic frequencies being made effective by signals, such for example, as voice waves, and being modulated by them, and to arrange for the selective reception of such energy and its transformation into sensible manifestations.

Still other objects of the invention will appear from the following description taken in connection with the drawings which form a part of this application and in which,

Fig. 1 is a diagram of a sending station which is an embodiment of this invention, and

Fig. 2 is a diagram of a receiving station arranged to cooperate with the sending station of Fig. 1.

The system shown in the drawings employs at its sending station a carrier wave of relatively high frequency upon which there is impressed one or more series of amplitude variations of relatively lower but supersonic frequency which are made effective by speech or other desired signals and are modulated thereby. The modulation of the lower supersonic frequency produces side bands, as is well known in the art, but according to the present invention, one of these side bands is suppressed. Furthermore, the carrier wave may be wobbled in frequency in an erratic manner, and is modulated by the modulated lower, supersonic frequency only when signals are impressed so that there is emitted from the sending station, radiant energy of a character which will not actuate an ordinary receiver.

In a general way, the receiving set may be described as comprising two or more resonant circuits arranged in series, one tuned to the carrier frequency mentioned above, and the other or others tuned to the modulated lower, supersonic frequency or frequencies, with detecting or rectifying means for each of the circuits. In combination with such receiving elements, an apparatus is used which provides energy at the lower, supersonic frequency of the sending station.

Referring more in detail to Fig. 1, there is shown a source of high frequency, said source being, in this case, a thermionic device 10, having a usual filament 11 for emitting electrons, a plate 12 upon which the electrons impinge, and a grid 13 for controlling the passage of electrons. These parts are connected with inter-related, inductively-coupled circuits in such a manner that the energy in the plate circuit reacts on the grid circuit so as to cause the device to oscillate regeneratively. There is thus produced an oscillatory current of a relatively high frequency, determined by the electrical constants of the inter-related circuits.

For producing oscillations of relatively lower but supersonic frequency, a second thermionic tube 20 having the usual filament 11, plate 12 and grid 13, is connected in a regenerative circuit arrangement comprising a transformer having windings 22 and 23, which are included in the plate and grid circuits respectively. This transformer also comprises a third winding 24 connected in the input circuit of a modulator which will be hereinafter described. The plate 12 is maintained at a positive potential with respect to the filament 11 by a usual B battery 27 whose positive terminal is connected through an inductance 28 to the plate. This regenerative circuit arrangement is provided with suitable condensers 25 and 26, the capacity of which may be adjusted to cause oscillations of a predetermined frequency, relatively lower than those of the master oscillator 10, to be produced by the generator 20.

For transforming or stepping up voice or other signal currents into a frequency range of relatively high or supersonic frequency less than the frequency of the master oscillator, but retaining the characteristics of the signal currents, the winding 24 of the above-mentioned transformer is connected by means of a conductor 30 with a signal modulator comprising a transformer 31 having its primary windings connected in

series with a telephone transmitter 32 and its secondary windings respectively connected in the input circuits of a pair of thermionic devices 33 and 34, each comprising a customary filament, plate and grid. The output circuit of the thermionic devices 33 and 34 includes the primary windings of a coupling transformer 35, the secondary winding of which is connected to a band filter 36 adapted for either high-pass or low-pass filtration. The windings of transformers 31 and 35 are so connected that the electromotive forces in the filter 36 are equal and opposite when no signal is being impressed on the transmitter 32. Consequently, the lower, supersonic frequency is suppressed except when the transmitter 32 is producing current variations. As shown, the devices 33 and 34 are arranged in the form of a so-called "push pull" modulator, by means of which electro-motive forces corresponding to the two side bands of the voice modulated lower supersonic frequency are produced in the filter 36. The filter comprises any suitable combination of inductances and capacities such as to permit the passage of one only of the side bands resulting from modulation of the lower supersonic frequency by the signal. It is preferable to employ a band filter arranged to permit the flow of the lower band and to suppress all other currents including the upper band.

For example, assuming the lower, supersonic frequency to be 40,000 cycles per second, and assuming that voice currents including frequencies ranging from 200 to 2000 cycles per second are used for signals, two side bands will be produced in the output circuit of the modulator 33, 34, one from 39,800 to 38,000 cycles inclusive, and the other from 40,200 to 42,000 cycles inclusive. The filter 36 will suppress the upper side band and there will, therefore, be transmitted by the filter a band of frequencies ranging from 39,800 to 38,000 inclusive.

The output circuit of the filter 36 is connected to the primary winding of a coupling transformer 40, the secondary winding of which is included in the grid circuit of a second side band modulator. This side band modulator comprises a thermionic device 41 including the usual filament, grid and plate. The internal plate-filament circuit of the thermionic device 41 is connected in series with an inductance 42 and in shunt with a winding 43 of a coupling transformer 44. The winding 43 is included in the output circuit of the master oscillator 10, and the secondary winding 45 of the transformer 44 is included in the circuit of the antenna 46 in such manner that energy supplied by the master oscillator 10 is variably withdrawn from the antenna circuit upon the operation of the device 41.

The antenna circuit which includes the winding 45 of the coupling transformer 44 may include also a so-called wobbler 50 for varying in an erratic manner the frequency of the oscillations emitted by the antenna. The wobbler includes a pair of contacts 51 and 52 intermittently closing at different rates the circuits of a corresponding pair of condensers 53 and 54; and also comprises a rotatable vane 55, passing intermittently adjacent to a stationary segment 56, whereby the capacity between the vane and the segment is intermittently varied at a relatively high rate. The vane and segment thus constitute a variable capacity and in combination with the variations in capacity caused by the intermittent closures of the contacts 51 and 52, produce rapid and erratic changes in the electrical characteristics of the circuit of the antenna and the winding 45 of the transformer 44. Thus the electrical constants of the antenna circuit and the frequency of the oscillations induced therein are rapidly changed in a manner determined by the varying combinations set up by the wobbler mechanism 50.

The circuits of one form of receiving station embodying the invention are shown in Fig. 2. These comprise a receiving element positioned so as to intercept Hertzian waves. As shown, this receiving element consists of an antenna 60, which includes an inductance 61 coupled to a closed oscillatory circuit 62, comprising an inductance 63 and a variable condenser 64. The inductance 61 is also variably coupled with an inductance 65. The closed oscillatory circuit 62 is connected in the input circuit of a thermionic device 66 having the usual filament 11 for emitting electrons, a plate 12 upon which the electrons impinge, and a grid 13 for controlling the passage of electrons.

The filament 11 of the thermionic device 66 may be heated by current supplied by a battery 70 and controlled by a variable resistance 71. In shunt with the filament 11 is a potentiometer 72 having a slider 73 connected with the closed, oscillatory circuit 62 whereby the normal potential maintained upon the grid 13, relative to the filament 11, may be adjusted. The output circuit of the thermionic device 66 includes the inductance 65 and the primary winding of an inter-valve transformer 74. This primary winding is designated by 75 and has a by-pass condenser 76 in shunt therewith. The other end of the winding 75 is connected with the positive pole of a source of direct current 77 for maintaining a positive potential upon the plate 12 of the thermionic device 66 relative to the filament 11.

For supplying oscillations of a frequency equal to that of the current of lower, supersonic frequency produced by the generator

20 at the sending station, and suppressed by the modulator 33, 34 and filter 36, there is provided a thermionic device 80, the filament of which may be heated by the battery 70. As shown, the thermionic device 80 is connected with inter-related, inductively coupled circuits so that it acts as a regenerative oscillator. The inductive coupling between these circuits comprises a transformer 81, one winding of which is shunted by a variable condenser 82 by means of which the oscillations generated may be made of the same frequency as the currents produced by the generator 20 at the sending station. The output circuit of the oscillator 80 includes the closed, oscillatory circuit formed by a winding of the transformer 81 and the variable condenser 82 and also the primary winding of a transformer 83. The other end of the primary winding of the transformer 83 is connected to the positive terminal of the plate potential source 77 whereby the plate of the thermionic device 80 is maintained at a positive potential relative to the filament.

A potentiometer 90 is connected across the filament heating battery 70, and includes a slider 91 connected to the secondary winding 78 of the transformer 74, and a variable condenser 92 forms with this winding 78 a closed, oscillatory circuit, the other end of which is connected through the secondary winding of the transformer 83 with the input circuit of a thermionic device 100. The oscillator 80, 81, 82 in combination with the transformer 83 forms a homodyne for impressing upon the input circuit of the thermionic device 100 an oscillatory electro-motive force corresponding in frequency to that of the suppressed currents produced by the generator 20 at the sending station.

The output circuit of the thermionic device 100 is connected to an indicating device, which, as shown is a telephone receiver 101 provided with a by-pass condenser 102. This output circuit also includes a connection between the indicating device and the positive terminal of the potential source 77.

When the transmitting station is actuated and radiant energy emitted therefrom of the composite character hereinbefore described, the operation of the receiving system is as follows. The radiant energy, intercepted by the circuit which includes the antenna 60, induces oscillations in the closed, oscillatory circuit 62, which is tuned to be responsive to the radiated energy of the sending station. The slider 73 is so adjusted that the thermionic device 66 operates on a curved portion of its characteristic curve and thus the device 66 acts to detect or rectify these oscillations. Its output circuit transmits these rectified oscillations through the inductance 65 which is adjustably coupled with the inductance 61 so that these transmitted oscillations are regeneratively amplified.

The superimposed current flowing in this output circuit varies in amplitude according to the modulations impressed upon the carrier wave at the sending station, and there appears in the circuit of the primary winding 75 of the inter-valve transformer 74, an uni-directional current having the frequencies and characteristics of the unsuppressed side band of the modulated lower, supersonic frequency of the sending station. The closed, oscillatory circuit 78, 92 is tuned to these frequencies by adjusting the condenser 92.

It has been shown that the thermionic device 80 with its connected circuits forms a homodyne which impresses upon the input circuit of the thermionic device 100 an oscillatory electro-motive force corresponding in frequency to that of the suppressed currents produced by the generator 20 at the sending station, and it may now be seen that this electro-motive force is combined with the oscillations induced in the closed oscillatory circuit 78, 92.

The slider 91 of the potentiometer 90 is so adjusted that the thermionic device 100 operates on a curved portion of its characteristic curve to cause it to detect or rectify these combined oscillations impressed upon its input circuit. Thus there are produced in the output circuit of the thermionic device 100 currents varying in amplitude in accordance with the signal currents. These currents cause the telephone 101 to produce sound waves of the same character as those which operated the signal transmitter 32.

When the signal transmitter 32 is not being actuated currents of the lower, supersonic frequency oppose and neutralize each other so that they have no effect upon the energy radiated from the sending station. Since the homodyne at the receiving station produces oscillations at a frequency above the range of audibility for the ordinary operator, it will not produce audible signals in the indicating device 101 under these conditions.

The receiving apparatus of an unauthorized station can not be adjusted to receive the true message unless definite knowledge is available as to the carrier frequency employed as well as the lower, supersonic frequency used. An unauthorized station cannot measure and determine the lower, supersonic frequency of the transmitting station because of the facts that when signals are not being impressed, currents of this frequency are neutralized and are not emitted from the sending station, and because in the transmission of signals these currents are modulated. Furthermore, when the wobbling mechanism is employed the emitted energy is further distorted.

By employing a low pass filter for eliminating the lower side band the modulations produced by the signal would be inverted. This would make it still more difficult for an unauthorized station to discover the group frequency employed.

The invention upon which this application is based is broader than the specific embodiment shown and described for the purpose of illustrating one of the ways in which it may be employed. Accordingly, the scope of the invention is not to be limited by this specific description. For example, a number of supersonic frequencies of lower frequency than that of the master oscillator, may be employed so that a corresponding plurality of speech or other signals may be transmitted and received at one time.

Another modification, which may be made without departing from the spirit of the invention, is to employ the system for telegraphic signals or radio-dynamic control. In the latter case, the signal modulated frequency referred to above as the "supersonic frequency" may be below the upper limit of audibility, but above the rate at which the desired signals are transmitted.

I intend no limitations other than those imposed by the following claims.

What is claimed is:

1. Apparatus for emitting radiant energy comprising a generator of high frequency oscillations, another and independent generator of oscillations of lower frequency, means interposed between the generators for producing in said high frequency oscillations amplitude variations of frequencies differing from said lower frequency in accordance with signals, and means for wobbling the frequency of the high frequency oscillations.

2. Apparatus for emitting radiant energy comprising a generator of high frequency oscillations, means including another generator of oscillations of different frequency for producing in said high frequency oscillations amplitude variations of supersonic frequencies varying in accordance with telephonic signals, and means for wobbling the frequency of the high frequency oscillations.

3. A radio system comprising a sending station having a generator of high frequency oscillations, means for producing periodic variations of said high frequency oscillations of a frequency lower than the frequency of said oscillations but above audibility, said means being arranged to be non-actuative when not affected by signals, a telephone transmitter arranged when operated to cause said variation producing means to affect the high frequency oscillations, whereby waves modified by telephonically-controlled, periodic variations are produced and means for wobbling the high frequency oscillations, and a receiving arrangement having an element arranged to intercept said waves, a closed, oscillatory circuit responsive to the high frequency oscillations, another closed, oscillatory circuit tuned to the signal-controlled, periodic variations, and means for transforming the energy set up in said circuits into sensible manifestations.

4. A radio system comprising a sending station having a generator of high frequency oscillations and means for impressing signal-controlled periodic variations upon said high frequency oscillations, said means including another generator of oscillations of different frequency, a push-pull modulator interposed between said generators, a signal transmitter cooperatively associated with the modulator and means for wobbling the high frequency oscillations and a receiving arrangement having an element arranged to intercept said waves, a closed, oscillatory circuit responsive to the high frequency oscillations, another closed, oscillatory circuit tuned to the signal-controlled periodic variations and means for transforming the energy set up in said circuits into sensible manifestations.

5. Apparatus for emitting radiant energy comprising a generator of high frequency oscillations, means for stepping up voice currents into a supersonic frequency range retaining the characteristics of the voice currents, means for producing amplitude variations in the currents generated by the high frequency generator according to the stepped up supersonic voice currents and means for wobbling the frequency of the high frequency oscillations.

6. A radio system comprising a sending station having a generator of high frequency oscillations, means for transforming signal currents into a supersonic frequency range retaining the characteristics of the signal currents, means for modulating the currents generated by the high frequency generator according to the transformed supersonic signal currents, whereby waves of said high frequency modified by signal-controlled, supersonic variations are produced and means for wobbling the frequency of the high frequency oscillations and a receiving arrangement having elements tuned to the high frequency oscillations and the signal-controlled periodic variations respectively and means for transforming the energy set up in said elements into sensible manifestations.

7. A radio system comprising a sending station having a generator of high frequency oscillations, means for transforming signal currents into a supersonic frequency range retaining the characteristics of the signal currents, means for producing amplitude variations in the currents generated by the high frequency generator according to the transformed supersonic signal currents,

whereby waves modified by signal-controlled periodic variations are produced, and means for wobbling the frequency of the high frequency oscillations and a receiving arrangement having circuits tuned to the high frequency oscillations and the signal-controlled periodic variations respectively, a vacuum tube detector interposed between said circuits, and means for transforming the energy set up in said circuits into energy of audible frequency having the characteristics of the signal currrents.

8. A radio system comprising a sending station having a generator of high frequency oscillations, means for impressing upon the ether waves derived from said oscillations, means for transforming voice currents into a supersonic frequency range retaining the characteristics of the voice currents, means for modulating the oscillations produced by the generator according to the transformed supersonic voice currents, whereby waves of said high frequency modified by voice-controlled periodic variations are produced, and means for wobbling the frequency of said high frequency oscillations and a receiving arrangement having an element arranged to intercept said waves, circuits resonantly responsive to the high frequency oscillations and to current of the frequency of the voice-controlled periodic variations respectively, and means for transforming the energy set up in said circuits into sensible manifestations.

9. A method of transmitting radio signals which consists of transforming signal currents into a relatively high frequency range, utilizing said high frequency currents to modulate currents of still higher frequency, wobbling the frequency of the last mentioned currents receiving the waves thus produced, transforming the received energy to the first-named frequency range by simple detection without the use of a local source of energy, detecting the transformed energy, and actuating an indicating device thereby.

10. A radio system comprising a sending station having a generator of high frequency oscillations, another generator of oscillations of different frequency, a push-pull modulator interposed between said generators, means interposed between the modulator and the generator of high frequency oscillations for producing amplitude variations in the high frequency oscilaltions in accordance with a side band produced by the modulator from said oscillations of different frequency, and a wobbler for varying erratically the frequency of the high frequency oscillations, and a receiving arrangement having an element positioned to intercept waves from the sending station, a closed, oscillatory circuit responsive to said high frequency oscillations, another closed, oscillatory circuit responsive to said amplitude variations, and means for transforming the energy set up in said circuits into sensible manifestations.

11. A radio system comprising a sending station having a generator of high frequency oscillations, another generator of oscillations of a different frequency, a push-pull modulator interposed between said generators, a signal transmitter arranged when operated to produce side bands from said oscillations of different frequency, means for suppressing one of said side bands, means interposed between said suppressing means and the generator of high frequency oscillations for modulating the high frequency oscillations in accordance with the unsuppressed side band, and a wobbler for varying erratically the frequency of the energy produced by the sending station and a receiving arrangement having an element arranged to intercept said waves, a closed, oscillatory circuit responsive to said high frequency oscillations, another closed, oscillatory circuit resonant to the signal-controlled modulations produced in the high frequency oscillations, a generator of oscilations corresponding with the oscillations of said different frequency associated with said other closed, oscillatory circuit, and means for transforming the energy set up in said circuits into sensible manifestations.

12. A radio system comprising a sending station having a generator of high frequency oscillations, another generator of oscillations of a different frequency, a push-pull modulator interposed between said generators, a signal transmitter arranged when operated to produce side bands from said oscillations of different frequency, means for suppressing the higher of said side bands, means interposed between said suppressing means and the generator of high frequency oscillations for producing amplitude variations in the high frequency oscillations in accordance with the unsuppressed side band, and a wobbler for varying erratically the frequency of the high frequency oscillations and a receiving arrangement having an element arranged to intercept said waves, a closed, oscillatory circuit responsive to said high frequency oscillations, another closed, oscillatory circuit tuned to the signal-controlled amplitude variations produced in the high frequency oscillations, a generator of oscillations corresponding with the oscillations of said different frequency associated with said other closed oscillatory circuit, and means for transforming the energy set up in said circuits into sensible manifestations.

13. A radio system comprising a sending station having a generator of high frequency oscillations, another generator of oscillations of a lower frequency, a modulator interposed between said generators, a signal

transmitter arranged when operated to produce side bands from said oscillations of lower frequency, means for suppressing one of said side bands, means interposed between said suppressing means and the generator of high frequency oscillations for modulating the high frequency oscillations in accordance with the unsuppressed side band, and a wobbler for varying the frequency of the high frequency oscillations and a receiving arrangement having a tuned circuit responsive to said high frequency oscillations, another tuned circuit responsive to the signal-controlled modulations produced in the high frequency oscillations, a generator of oscillations corresponding with the oscillations of said different frequency associated with said other closed, oscillatory circuit, and means for transforming the energy set up in said circuits into sensible manifestations.

14. Apparatus for emitting radiant energy comprising a three-electrode tube generator of high frequency oscillations including windings in its input and output circuits respectively, an oscillatory circuit coupled with said first-mentioned circuits so as mainly to determine the frequency of the oscillations produced by the generator, means in said oscillatory circuit for wobbling the frequency of the high frequency oscillations, and means for modulating said oscillations comprising a three-electrode tube having its plate filament circuit connected in parallel with the plate filament circuit of the generating tube.

15. Apparatus for emitting radiant energy comprising a three-electrode tube generator of high frequency oscillations including windings in its input and output circuits respectively, an antenna containing a winding coupled to said first-mentioned windings, a closed oscillatory circuit including said last-mentioned winding and mainly determining the frequency of the oscillations produced by the generator, means in said oscillatory circuit for wobbling the frequency of the high frequency oscillations and means for modulating said oscillations comprising a three-electrode tube having its plate filament circuit connected in parallel with the plate filament circuit of the generating tube.

In testimony whereof I hereunto affix my signature.

E. LEON CHAFFEE.