May 12, 1953 H. NELSON 2,638,025

HARDWARE REMOVING TOOL

Filed Sept. 3, 1948

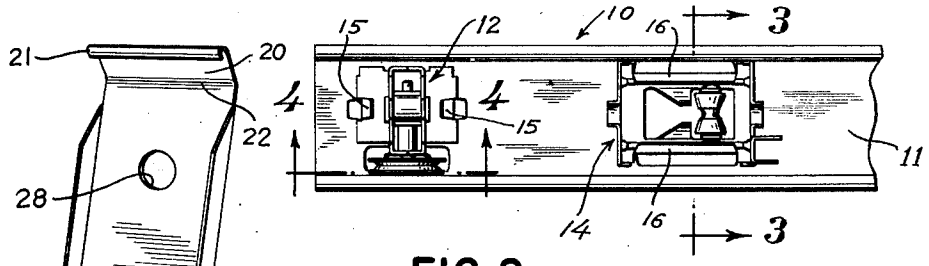

FIG. 2

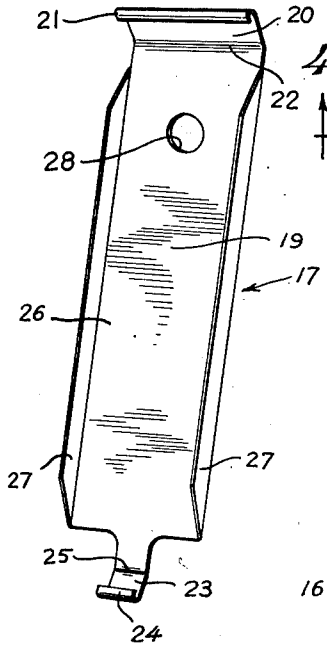

FIG. 1

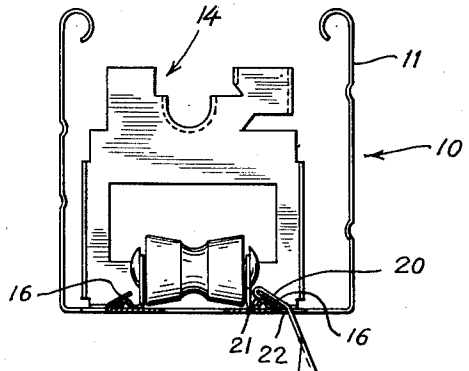

FIG. 3

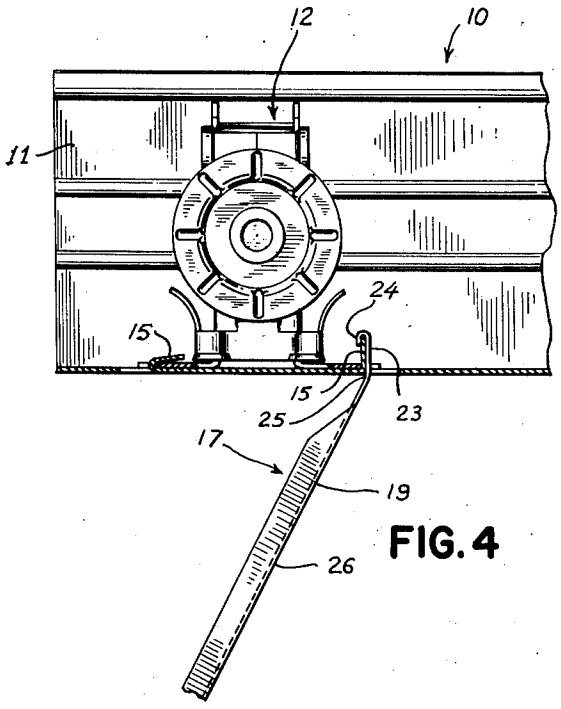

FIG. 4

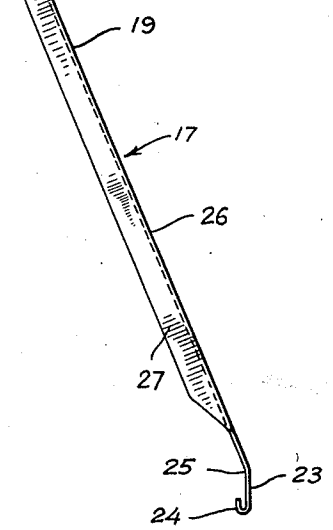

INVENTOR
HARRY NELSON
BY
Ramsey, Chisholm & Melder
HIS ATTORNEYS

Patented May 12, 1953

2,638,025

UNITED STATES PATENT OFFICE

2,638,025

HARDWARE REMOVING TOOL

Harry Nelson, New York, N. Y., assignor to Lorentzen Hardware Mf'g. Corp., New York, N. Y., a corporation of New York

Application September 3, 1948, Serial No. 47,637

2 Claims. (Cl. 81—15)

1

This invention relates to Venetian blinds and more particularly to a tool for and method of removing fittings from head bars of Venetian blinds.

In the so-called "inclosed head" type of Venetian blinds, the blind-operating fittings are contained within a more or less inclosed head bar that conceals the fittings from view. In certain of these inclosed heads formed of sheet metal, the fittings, which may consist of a tilter, two or more tilt rod cradles and a cord lock, are held in place on the inside bottom wall of the head bar by tabs previously struck from the bottom wall of the head bar and bent down on the bases of the fittings to retain the fittings in position. The openings left in the bottom wall of the head bar may be utilized for passage of blind-operating cords or ladder tapes. Reference is made to my copending application S. N. 778,002, Patent 2,629,434, issued February 24, 1953, for a detailed description of such a head bar.

It is sometimes necessary or desirable to remove some or all of the fittings from a previously-assembled head bar in order to replace a defective fitting or salvage fittings from a defective or otherwise unusable head bar. The present invention is directed to the provision of an improved hand-operated tool for, and method of, engaging and raising the bent-over tabs from fitting-engaging position so as to free the fitting for removal from the head bar.

In the form shown, the tool of the present invention comprises a thin, generally flat plate having at least one end folded back upon itself in spaced relation to form a hook. The hooked end portion of the tool is narrower than the width of the openings formed in the head bar by striking tabs therefrom so that the end of the tool may be inserted through this head bar opening beside the tab and the hook engaged over the end of the tab. Then, by displacing the tool about the side of the slot as a fulcrum, the tool acting as a first class type of lever, the engaged tab may be raised from fitting-engaging position, after which the tool is disengaged from the tab and withdrawn from the head bar.

An object of the present invention is to provide an improved method for disengaging fitting-securing tabs from blind-operating fittings that have been mounted in Venetian blind inclosed metal heads.

Another object of the invention is to provide an improved tool useful in removing blind-operating fittings from Venetian blind inclosed metal heads.

Further objects and objects relating to details

2

of construction, manufacture and use will more definitely appear from the detailed description to follow.

My invention is clearly defined in the appended claims. In the claims, as well as in the description, parts are at times identified by specific names for clarity and convenience, but such nomenclature is to be understood as having the broadest meaning consistent with the context and with the concept of my invention as distinguished from the pertinent prior art. The best form in which I have contemplated applying my invention is illustrated in the accompanying drawings forming part of this specification, in which:

Fig. 1 is a perspective view of a tool of the present invention.

Fig. 2 is a fragmentary top plan view of an inclosed metal head, showing the tilter and a tilt rod cradle mounted within the head.

Fig. 3 is a vertical section, on an enlarged scale, taken on the line 3—3 of Fig. 2, one end of the tool of Fig. 1 being shown engaged with one of the cradle-retaining tabs of the head bar.

Fig. 4 is a fragmentary vertical section, on an enlarged scale, taken on the line 4—4 of Fig. 2, the other end of the tool of Fig. 1 being shown in engagement with one of the tilter-retaining tabs of the head bar and the tool having been displaced to raise the tab from fitting-retaining position.

In order that the nature and operation of the tool of the present invention may be better understood, a description of the construction of the head bar with which the present form of the invention is intended to be used will first be given.

Referring to Figs. 2, 3 and 4, the inclosed metal head 10 comprises a sheet metal channel 11 which has blind-operating fittings such as the tilter 12 and the tilt rod cradle 14 mounted along the inner face of the bottom wall thereof. The tilter 12 is retained in position by tabs 15, 15, bent over its base, these tabs having previously been struck from the bottom wall of the channel 11. Similarly, the tilt rod cradle 14 is retained in position within the channel 11 by tabs 16, 16 bent over its base, these tabs also having previously been struck from the bottom wall of the channel. As shown, the tabs 16, 16 may be somewhat wider than the tabs 15, 15, this having certain advantages not important in the consideration of the present invention.

The head bar 10 is provided with one or more additional tilt rod cradles (not shown) and a

cord lock (not shown), these fittings being likewise retained within the channel 11 in the same manner as those fittings that are shown. The tabs which hold the cord lock fitting may be of the same size and shape as the tabs 15, 15. This head bar is described in greater detail in my copending application S. N. 778,002, previously referred to.

The tool 17 for removing the fittings from the metal head 10 may be formed in one piece of sheet steel approximately .025 of an inch thick; and the tool may be hardened, at least for its end portions, after being formed. An end 20 of the body 19, which end preferably has a width only slightly less than the slots formed in the channel 11 by striking the tabs 16, 16, is folded upon itself in parallel spaced relation to form a hook 21 (Figs. 2 and 3). The opening in the hook 21 is of such size as to engage over the end of the tabs 16, 16. If desired, the end 20 of the tool 17 may be given a slight transverse bend 22 just below the hook 21 and in the same direction as the hook, the advantage of so forming the hook being explained later.

The opposite end 23 of the tool 17 may be formed to a more or less similar cross section (Figs. 3 and 4) so as to form a hook 24 and a transverse bend 25. However, in this instance, the end 23 is somewhat narrower, the width being such as to be slightly narrower than the tabs 15, 15 securing the tilter 12 so that this end may be introduced through the slots in the channel 11 formed by striking the tabs 15, 15.

The intermediate portion 26 of the tool 17 may be formed of the same width as the wider end 20 thereof, and is preferably provided with a pair of marginal upstanding flanges 27, 27 to give desirable rigidity to this portion of the body 19. The ends of the flanges 27, 27 may be chamfered if desired, as is perhaps best seen in Fig. 3. A hole 28 may be provided in the body 19 between the flanges 27, 27 for convenience in hanging the tool when not in use.

In the use of the tool 17 for removing the tilt rod cradle 14 from the metal head 10, the end 20 of the tool 17 is introduced through one of the slots formed in the channel 11 by striking a tab 16, the hook 21 being engaged over the end of the tab 16 as shown in Fig. 3. Engagement of the hook 21 over the tab 16 is facilitated in this instance by the fact that the tab is bent down over a bead on the base of the tilt rod cradle 14, leaving the end of the tab free. However, even when tabs are bent over flat bases such as the base of the tilter 12, the free end of the tab is never in such close engagement with the base of the fitting that the backwardly bent portion of the hook cannot be introduced between the end of the tab and the fitting. The transverse bend 22 facilitates engagement of the hook 21 with the tab 16 by inclining the hook in the direction of the tab when the end 20 of the tool 17 is inserted within the channel 11. The transverse bend 22 is so positioned as to be approximately at the base of the tab 16 when the hook 21 is engaged with the tab.

After the tool has been engaged as above described, the tool is fulcrumed against the base of the tab 16 by displacing the intermediate portion 26 of the tool to the left when the parts are in the relation indicated in Fig. 3. This movement may be continued until the tab 16 extends approximately perpendicular to the wall of the channel 11 from which it projects. By the same procedure, the opposite tab 16 may similarly be raised from engagement with the tilt rod cradle 14, permitting the fitting to be lifted from the channel 11. In some instances, it may be possible to remove the fitting after releasing only one of the tabs 16.

The opposite end 23 of the tool 17 is used in a like manner for raising the tabs 15, 15 from engagement with the base of the tilter 12. Fig. 4 shows the position of the tool upon completion of the tab-raising operation. The end 23 of the tool is also used for performing a similar operation on the tabs which secure the cord lock (not shown) the cord-lock-retaining tabs being of a width corresponding to the tabs 15, 15.

I claim:

1. A tool for facilitating the removal of a fitting from within a Venetian blind hollow enclosed metal bar in which the fitting is secured to an interior wall of the head bar by at least one metal tab struck from the wall thereof, said tab extending into the interior of the head bar, being bent over a portion of the fitting, and leaving a slot in the wall of the head bar adjacent to the tab, said tool comprising: a member formed of relatively thin sheet metal having a thin, flat, rigid end bent back upon itself in parallel spaced relation to form a hook for entry through said slot and for engagement over the fitting-securing tab to bend the same away from the fitting, said tool end being adapted for insertion through the slot adjacent to said tab, and having a generally straight body portion, the end of the tool having a slight transverse bend a short distance from the hook and inclined in the same direction as the hook to facilitate engagement of the tool with the tab.

2. A tool as claimed in claim 1, having upstanding marginal stiffening flanges extending along the side edges thereof.

HARRY NELSON.

References Cited in the file of this patent

UNITED STATES PATENTS

Number	Name	Date
961,375	Seabrook	June 14, 1910
1,513,703	Frisch	Oct. 28, 1924
1,515,349	Lossius	Nov. 11, 1924
1,960,799	Sieg	May 29, 1934
2,113,598	Mueller	Apr. 12, 1938
2,264,161	Hammer	Nov. 25, 1941
2,264,162	Hammer	Nov. 25, 1941
2,302,910	Johannesmeyer	Nov. 24, 1942
2,330,023	Balousek	Sept. 21, 1943
2,429,327	Morgan	Oct. 21, 1947
2,464,132	Hansord	Mar. 8, 1949
2,503,683	Perkins	Apr. 11, 1950