May 20, 1941. G. DESSONNAZ 2,242,458

PENCIL SHARPENER

Filed March 29, 1940

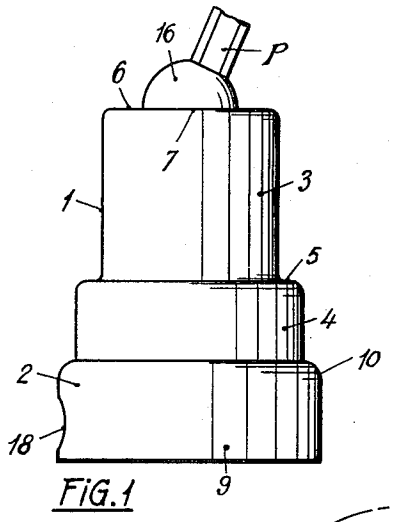

FIG. 1

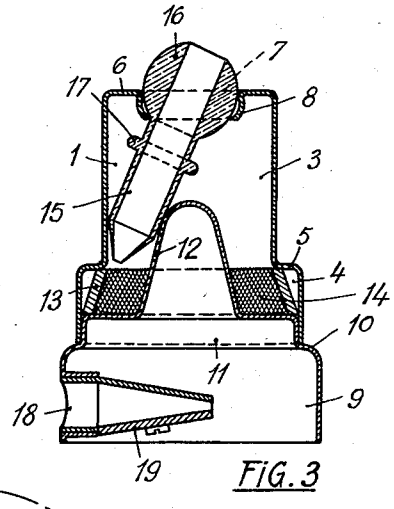

FIG. 3

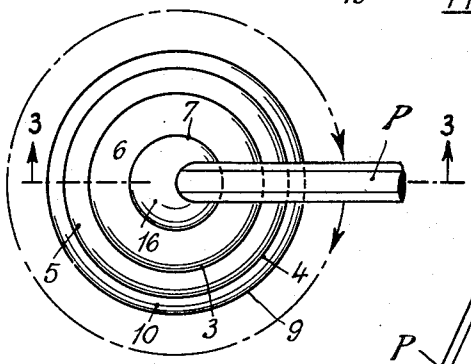

FIG. 2

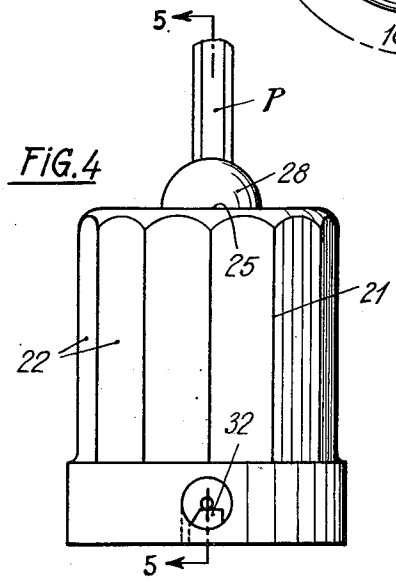

FIG. 4

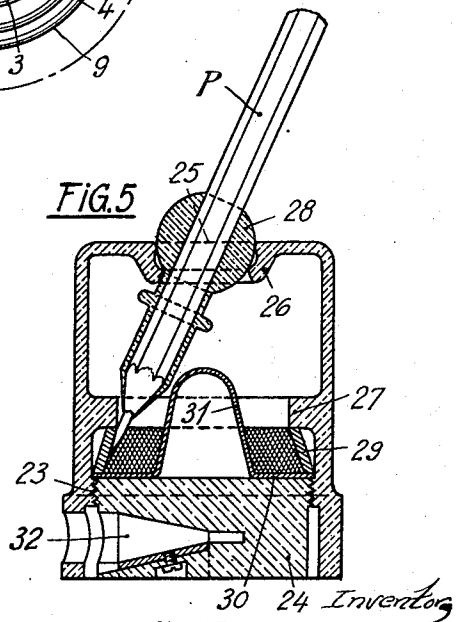

FIG. 5

Inventor
G. Dessonnaz
By: Glascock Downing & Seebold Attys.

Patented May 20, 1941 2,242,458

UNITED STATES PATENT OFFICE

2,242,458

PENCIL SHARPENER

Georges Dessonnaz, Fribourg, Switzerland, assignor of one-half to Roger de Werra, Lausanne, Switzerland

Application March 29, 1940, Serial No. 326,771
In Switzerland April 8, 1939

5 Claims. (Cl. 120—91)

The present invention relates to a pencil sharpener and has for its object to provide improved means for sharpening leads of pencils.

The invention also consists in the further features hereinafter described and set forth in the dependent claims, reference being had to the accompanying drawing which illustrates, by way of example, two embodiments thereof and wherein:

Fig. 1 is an elevation and Fig. 2 a plan view showing the first embodiment of the invention, while Fig. 3 represents a sectional view taken on the line 3—3 in Fig. 2.

Fig. 4 is an elevation according to the second embodiment of the invention, and Fig. 5 shows a sectional view taken on the line 5—5 in Fig. 4.

The pencil sharpener according to the Figs. 1 to 3 comprises a support formed to include a body 1 and a base 2 made for instance of aluminium plate and shaped by means of a sheet metal pressing machine. The body 1 is constructed of two hollow cylinders 3 and 4 of different diameter and connected to each other by a shoulder 5, the cylinder 3 being partly closed at its top by an end wall 6 having a central aperture 7 formed by an inwardly projecting border 8 of said wall. The base 2 is shown having a lower cylindrical portion 9, a shoulder 10, a cylindrical portion 11, and a tapered central projection 12 extending axially into the body 1.

Between the shoulder 5 of the body 1 and the base 2 is clamped a circular ring 13 of case-hardened steel, said ring being slightly tapered as shown and affording internally a knurled or abrading surface 14.

Within the cylinder 3 of the body 1 is disposed a socket 15 extending through the aperture 7 of said cylinder and being adapted to receive the pencil P to be sharpened. The top of said socket is formed to provide a ball and socket joint 16 which is somewhat larger in diameter than the aperture 7 so as to rest on the border 8 forming said aperture. The bottom of the socket is coniform and presents a central bore providing a passage for the lead of the pencil P. The socket presents further on its middle portion an outer collar 17 which is slightly spaced apart from said ball and socket joint.

The base 2 is provided with a lateral opening 18 housing any known cutting device 19 adapted to cut or point the wooden shafts of pencils.

The above described pencil sharpener is to be used in the following way:

The pencil P is first placed into the aperture 18 to relieve the lead from the wooden shaft by means of the device 19; then it is introduced into the socket 15, whereby the said lead projects through the bore of the coniform bottom of said socket to get into contact with the abrading surface 14 of the ring 13. Then, a circular movement is imparted to the pencil (see Fig. 2) while turning the same between the fingers, whereby the socket 15 guided by the projection 12 of the base 2 partakes of said movement and follows the circumference of a cone in such a way as to hold the lead of the pencil in permanent contact with the abrading surface 14 of the ring 13. Owing to the friction produced on the said surface, the lead is quickly sharpened and thereby assumes a tapered form. It will be sufficient to revolve the pencil a few times to give its lead of whatever shape a perfectly sharpened form.

The collar 17 cooperates with the border 8 of the aperture 7 so as to prevent the socket 15 from being intempestively withdrawn from the body 1 as long as the said body and the base 2 are maintained assembled.

The pencil sharpener illustrated in Figs. 4 and 5 comprises a body 21 made of mould material such as Bakelite or the like; this body which may be in the form of a hollow cylinder is preferably cut with facets at its outer surface and affords at its bottom a screw thread 23 adapted to engage a threaded base 24 which may be made of the same material as the body 21.

The body 21 presents at its top a central aperture 25 formed by an inwardly projecting border 26 of said body; it is also provided with an inner flange 27 as shown in Fig. 5. Through the aperture 25 extends a socket 28 which is of the same construction as the socket 15 of the embodiment first described. Between the base 24 and the flange 27 is inserted a tapered ring 29 not different from the ring 13 previously described. Moreover, the base 24 and the said ring 29 clamp between each other a member of aluminium plate constructed to form a flange 30 and a tapered central projection 31 extending axially into the body 21, said member being adapted to constitute a guide for the socket 28 to which a circular movement may be imparted in the above described manner.

The base 24 also houses a cutting device 32 of the known type, adapted to cut the wood of pencils before sharpening the leads of the latter.

I claim:

1. Pencil sharpener, in combination a support, an abrading conical surface within said support, a guide member disposed concentrically to the

longitudinal axis of said surface, and a ball and socket joint carried by said support above said surface, said joint being diametrically perforated to engage a pencil and being capable of oscillatory motion about a point of said axis so as to revolve said pencil around said guide member while bringing the lead into contact with the abrading surface for sharpening said lead thereon upon revolving said pencil.

2. Pencil sharpener, in combination a support formed of a hollow cylinder and a base detachably assembled to each other, said cylinder having at its top a central aperture forming a seat, a tapered ring disposed concentrically in said cylinder and affording an abrading inner surface coaxial with said aperture, a guide member disposed concentrically to the longitudinal axis of said surface, and a ball and socket joint resting on the seat of said cylinder above said surface, said joint being diametrically perforated to engage a pencil and being capable of oscillatory motion about a point of said axis so as to revolve said pencil around said guide member while bringing the lead into contact with the abrading surface for sharpening said lead thereon upon revolving said pencil.

3. Pencil sharpener, in combination a support formed of a hollow cylinder and a base detachably assembled to each other, said cylinder being provided with a lateral shoulder and having at its top a central aperture forming a seat, a tapered ring disposed concentrically in said cylinder, said ring being clamped between said base and the lateral shoulder of said cylinder and affording an abrading inner surface coaxial with said aperture, a guide member formed integral with said base and projecting therefrom concentrically to the longitudinal axis of said surface, and a ball and socket joint resting on the seat of said cylinder above said surface, said joint being diametrically perforated to engage a pencil and being capable of oscillatory motion about a point of said axis so as to revolve said pencil around said guide member while bringing the lead into contact with the abrading surface for sharpening said lead thereon upon revolving said pencil.

4. Pencil sharpener, in combination a support formed of a hollow cylinder and a base detachably assembled to each other, said cylinder being provided with a lateral shoulder and having at its top a central aperture forming a seat, a tapered ring disposed concentrically in said cylinder, said ring being clamped between said base and the lateral shoulder of said cylinder and affording an abrading inner surface coaxial with said aperture, a guide member formed integral with said base and projecting therefrom concentrically to the longitudinal axis of said surface, a socket extending within said cylinder and affording a coniform bottom with a central bore forming a passage for leads, and a diametrically perforated ball and socket joint formed integral with said socket and resting on the seat of said cylinder above said surface, said socket and joint being adapted to engage a pencil and to maintain the same in a determined position with respect to the tapered ring, and said joint being capable of oscillatory motion about a point of said axis so as to revolve said pencil around said guide member while bringing the lead into contact with the abrading surface for sharpening said lead thereon upon revolving said pencil.

5. Pencil sharpener according to claim 4, said socket presenting an outer collar capable of seating against the border of the central aperture of the cylinder so as to prevent said socket from being intempestively withdrawn from the support as long as the cylinder and the base are maintained assembled.

GEORGES DESSONNAZ.