United States Patent [19]

Hurst

[11] **3,808,415**

[45] **Apr. 30, 1974**

[54] **APPARATUS FOR HOLDING AND ILLUMINATING GRAPHIC MATERIALS**

[76] Inventor: **James K. Hurst,** 44 S. Mingo, Tulsa, Okla. 74115

[22] Filed: **Mar. 8, 1971**

[21] Appl. No.: **121,752**

[52] **U.S. Cl.** ..... **240/2 D,** 24/204, 40/341, 240/6.4 B

[51] **Int. Cl.** **F21v 33/00**

[58] **Field of Search** .... 240/2 D, 2 P, 6.4 R, 20.1 R, 240/1 EL, 6.4 B, 2 R; 40/10, 11, 341, 348, 106.1, 352, 130 L, 140, 125 A, 10 A; 116/135, 124.1 A; 24/DIG. 18, 204, 87; 108/43; 132/53

[56] **References Cited**

UNITED STATES PATENTS

3,215,453	11/1965	Malcom, Jr.	240/6.4 UX
3,232,685	2/1966	Wilstein et al.	240/6.4 X
3,321,068	5/1967	Beach	24/204 UX
3,327,419	6/1967	Stanos	40/140 X
3,370,818	2/1968	Derr	24/DIG. 18
3,388,243	6/1968	Adler	240/2 R
3,475,810	11/1969	Mates	24/DIG. 18
3,517,395	6/1970	Shimoi	24/204 UX
3,617,727	11/1970	Lynn	240/1 R
3,495,603	11/1967	Young, Jr.	132/53
3,679,530	7/1972	Perina	24/204

FOREIGN PATENTS OR APPLICATIONS

437,237	10/1935	Great Britain	116/124.1 A

Primary Examiner—Louis J. Capozi
Attorney, Agent, or Firm—William S. Dorman

[57] **ABSTRACT**

An illuminated apparatus for holding and illuminating graphic materials, such as maps, charts, data sheets, and the like, and provided with novel means for securing the apparatus in a convenient support position during use thereof. The apparatus comprises a substantially flat support plate having a flat transparent clamping plate hingedly secured thereto for holding the graphic material on the support plate and for dispersing light evenly over the surface thereof for facilitating view of the material.

10 Claims, 14 Drawing Figures

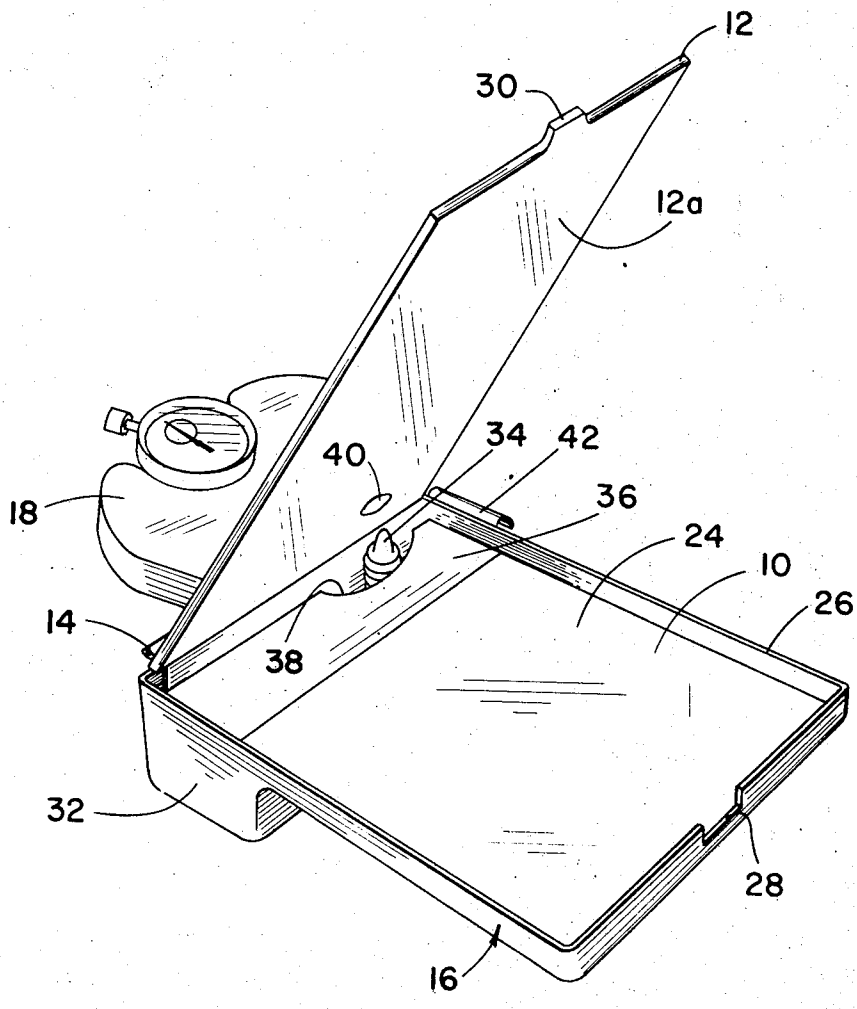

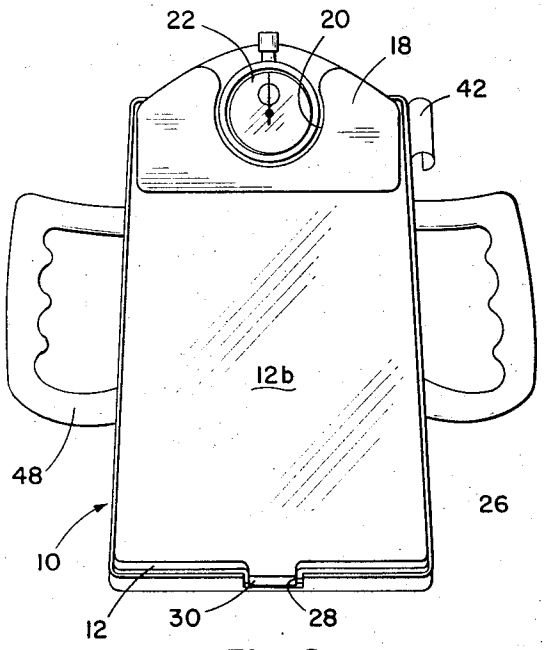

Fig. 2

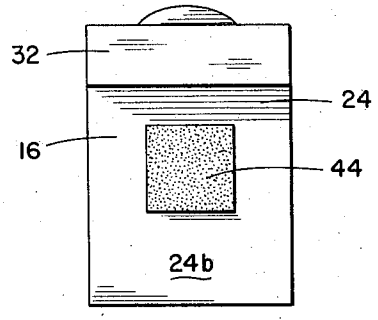

Fig. 4

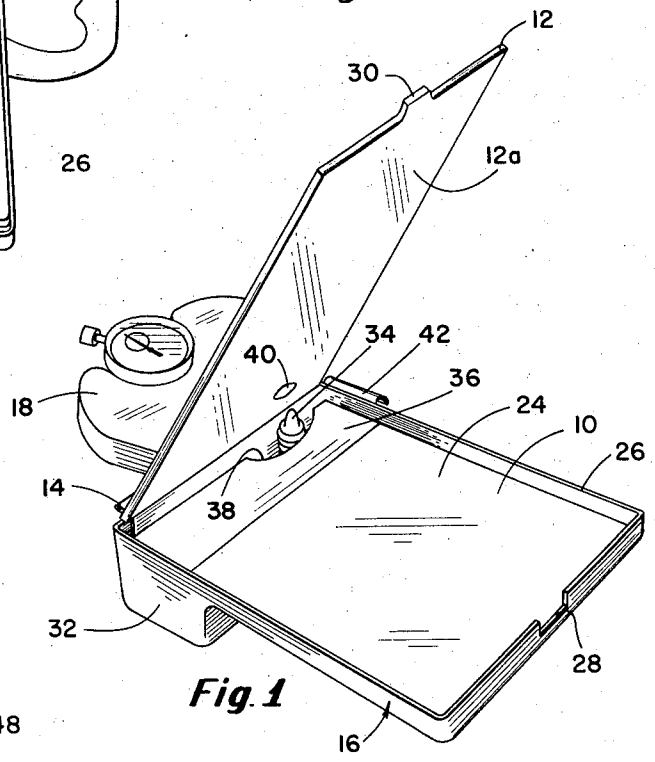

Fig. 1

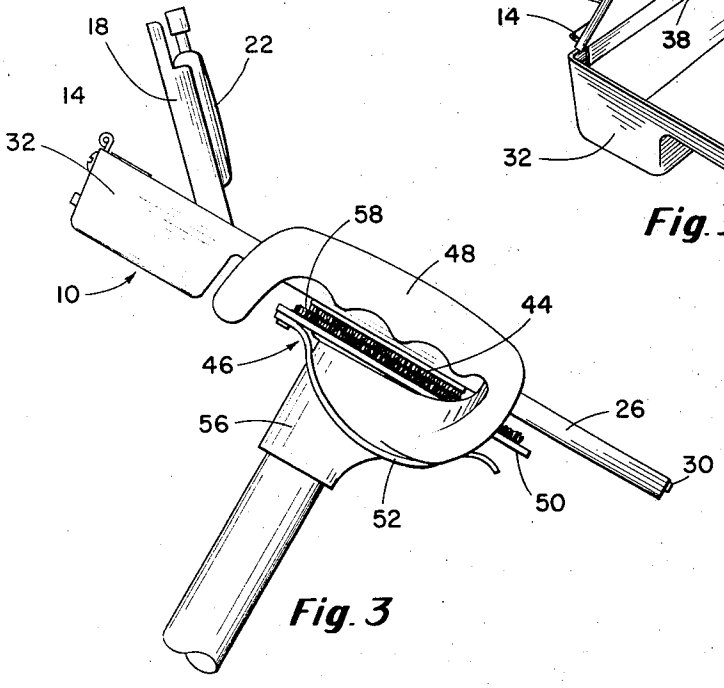

Fig. 3

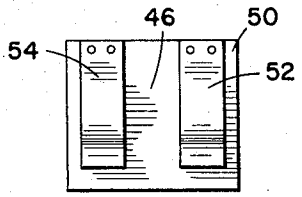

Fig. 5

JAMES K. HURST

INVENTOR.

BY

William S. Dorman

ATTORNEY

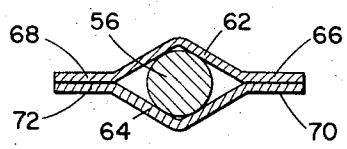

Fig. 7

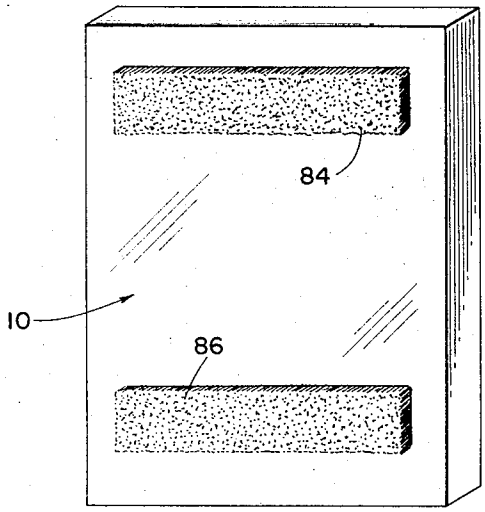

Fig. 8

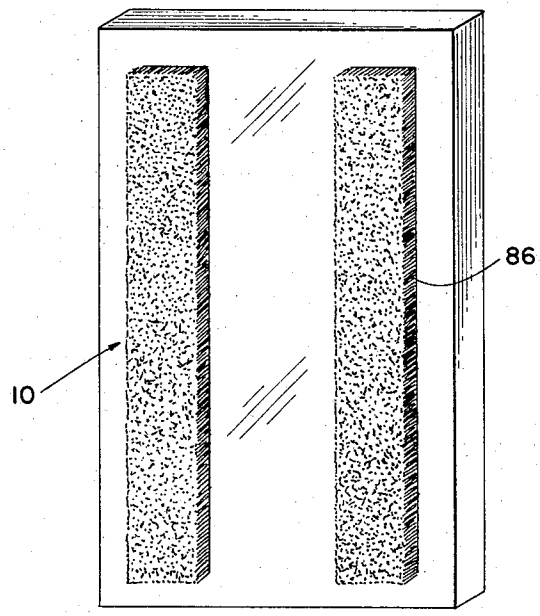

Fig. 9

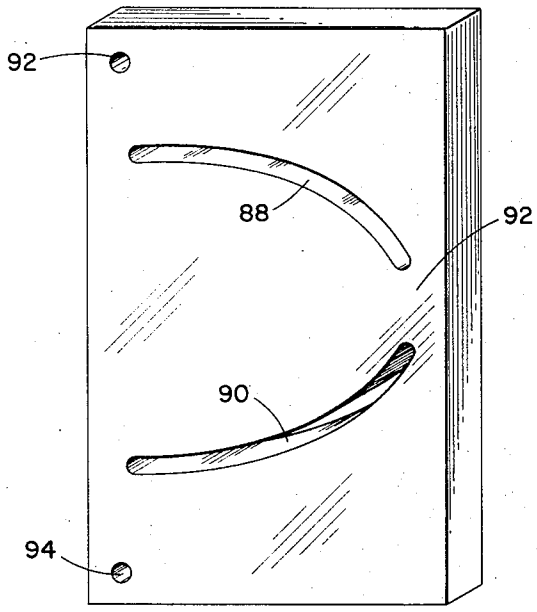

Fig. 10

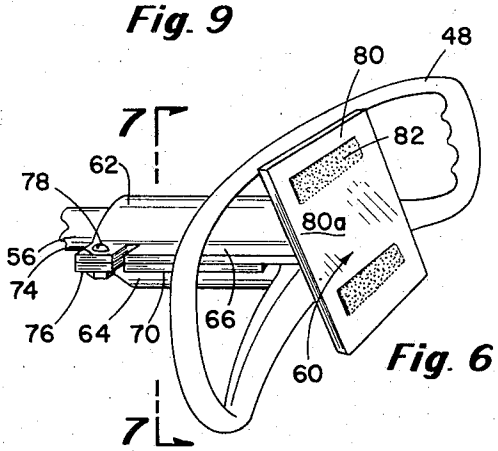

Fig. 6

JAMES K. HURST

INVENTOR.

BY

William S. Dorman

ATTORNEY

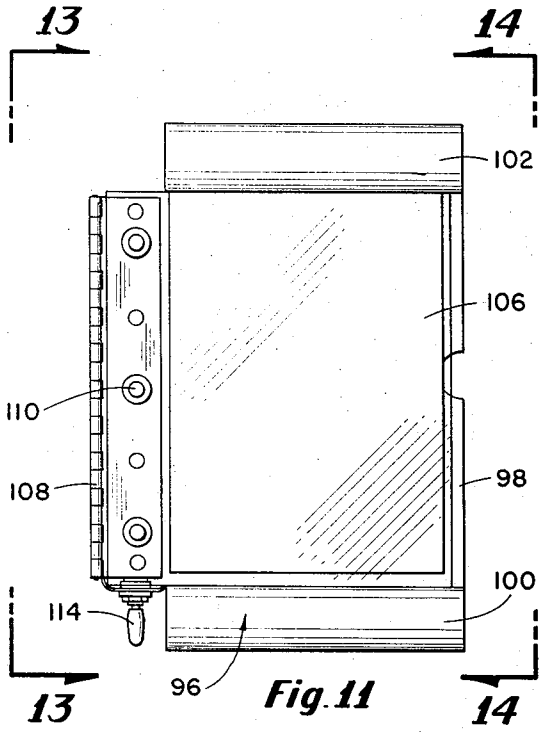

Fig. 11

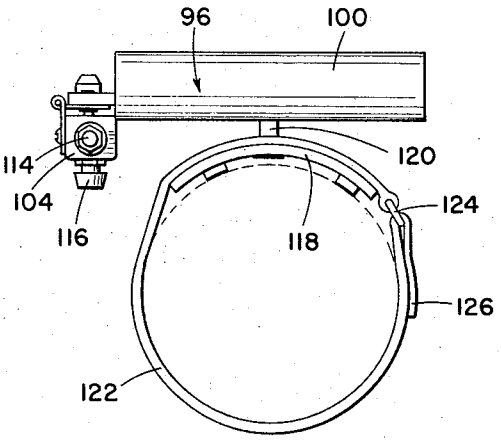

Fig. 12

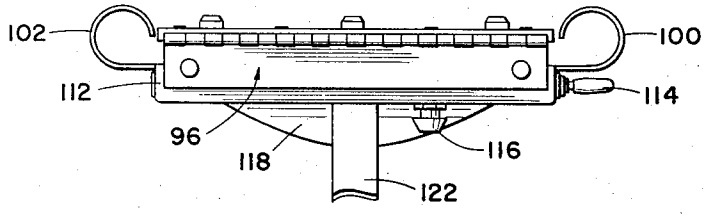

Fig. 13

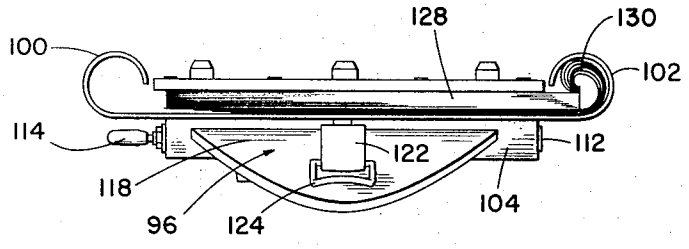

Fig. 14

JAMES K. HURST
INVENTOR

BY
William S. Dorman
ATTORNEY

APPARATUS FOR HOLDING AND ILLUMINATING GRAPHIC MATERIALS

This invention relates to devices for holding and illuminating graphic materials, and more particularly, but not by way of limitation, to a clipboard holding device for efficiently illuminating the graphic materials and securing the materials in a convenient position during use thereof.

There are many instances wherein it is desirable to clamp or hold charts, maps, data sheets, and the like securely during use thereof, and provide an illumination of the material while holding thereof. For example, an aircraft pilot uses a chartboard extensively during his operation of the aircraft and it is important that he have the material readily available for viewing when the data is required. However, during much of his time, the pilot's hands are quite busy with manipulating the adjusting controls, and the like. There is normally not much spare space on the instrument panel of the aircraft, and as a consequence, the chart board is frequently secured to the knee or leg of the pilot during use. During nighttime operations of the aircraft it is usually desirable to keep the cockpit as dark as possible, and as a result the illumination of the chart board may create a problem. As a consequence small lights or electric bulbs may be provided for the chartboard as shown in the Malcom, Jr. U.S. Pat. No. 3,215,453, issued Nov. 2, 1965, and entitled "Flight Log and Approach Chart Presentation Apparatus." Alternatively, the charts may be illuminated by means of a transparent face plate having one face thereof frosted for evenly distributing light across the face of the graph, as shown in my co-pending application Ser. No. 869,448, filed Oct. 17, 1969, and entitled "Method and Apparatus for Illuminating Graphic Material." Of course, there are other instances wherein it is desirable to hold and illuminate data sheets, and the like, such as in computer use, microsystems, radio, and the like, It will be apparent that in many of these instances, and including aircraft use, it may be more convenient to secure the chart board to a support member rather than to the body of the person using the data sheets, and the like.

The present invention contemplates a novel chart board generally similar to that disclosed in my aforementioned co-pending application, but incorporating certain improvements and advantages thereover in that means has been particularly designed and constructed for facilitating installation of the chart board on substantially any desired support structure, for example, the steering wheel of an aircraft, or the windowsill of an aircraft, or a flat surface such as a table top, or the like. A plurality of clamping elements are provided, each adapted for securing the chart board to a particular support structure, and each readily attachable to the chart board for converting the chart board for attachment to the desired support structure. For example, when it is desired to clamp or secure the chart board to the knee or leg of the user, the knee clamp device may be quickly and easily secured to the rear face of the chartboard. When it is desired to secure the chart board to the to the steering wheel of the aircraft, the knee clamp device may be quickly and easily removed from the chart board and replaced with the wheel clamp device. In addition, one embodiment of the chart holding apparatus is designed for facilitating the holding and illuminating of a plurality of data sheets such as charts and the like provided in booklet or pad form. The pad of charts may be easily held and illuminated in the apparatus or device in a manner providing full vision of the desired chart and without damage of any of the other charts included in the pad. The graphic material disposed within the device is illuminated in a manner precluding interference with the normal lighting in the area wherein the device is in use and in a manner to preclude the reflecting of the light into the eyes of the user.

It is an important object of this invention to provide a novel holding and illuminating apparatus for facilitating the use of graphic materials.

Another object of this invention is to provide a novel chart holding and illuminating device which may be readily converted for being secured to substantially any desired support structure.

Still another object of this invention is to provide a novel chart holding and illuminating device wherein the material disposed therein is illuminated in a manner substantially precluding disturbance of the normal lighting in the area wherein the device is used.

A further object of this invention is to provide a novel chart holding and illuminating device wherein the material disposed therein is illuminated in a manner substantially precluding reflecting of the light into the eyes of the user.

A still further object of this invention is to provide a novel chart holding and illuminating apparatus which is simple and efficient in operation and economical and durable in construction.

Other and further objects and advantageous features of the present invention will hereinafter more fully appear in connection with a detailed description of the drawings in which:

FIG. **1** is a perspective view of a chart board embodying the invention.

FIG. **2** is a front perspective view of the chart board depicted in FIG. **1** as installed on a steering wheel of an aircraft.

FIG. **3** is a side elevational view of the chart board depicted in FIG. **1** as installed on a steering wheel of an aircraft.

FIG. **4** is a rear elevational view of the chart board depicted in FIG. **1.**

FIG. **5** is a rear elevational view of the steering wheel clamping means depicted in FIGS. **2** and **3.**

FIG. **6** is a perspective view of another form of clamping means installed on steering wheel of an aircraft.

FIG. **7** is a view taken on line **7—7** of FIG. **6.**

FIG. **8** is a perspective view of the rear portion only of a chart holding device depicting one form of securing means therefor.

FIG. **9** is a view similar to FIG. **8** depicting another form of securing means.

FIG **10** is a view similar to FIG. **8** depicting still another form of securing means.

FIG. **11** is a front elevational view of a modified chart board embodying the invention.

FIG. **12** is an end elevational view of the chart board depicted in FIG. **11.**

FIG. **13** is a view taken on line **13—13** of FIG. **11.**

FIG. **14** is a view taken on line **14—14** of FIG. **11.**

Referring to the drawings in detail, and particularly FIGS. **1** through **5,** reference character **10** generally indicates a data sheet holder apparatus comprising an

upper substantially flat cover plate member **12** hingedly secured at **14** to one edge of an open box or tray member **16.** The cover plate **12** is constructed from a suitable transparent material, such as plexiglas, lucite, clear plastic, glass, or the like, and is frosted on the lower surface **12***a* (FIG. **1**) thereof in the manner and for the purpose set forth in my aforementioned co-pending application. An angularly disposed upstanding bracket or support member **18** is secured to the outer surface **12***b* (FIG. **2**) of the plate **12** and is spaced forwardly from the hinge **14** whereby a preponderance of weight is provided for urging the plate **12** into a normal position adjacent the tray **16** for a purpose as will be hereinafter set forth. The bracket **18** is preferably provided with a centrally disposed recess portion **20** for receiving a suitable stop watch **22** therein for convenience of the user of the apparatus **10.** The watch **22** may be secured within the recess **20** in any well known manner, such as by glue, or the like, if desired.

The box or tray **16** is preferably a relatively shallow tray having a solid bottom plate member **24** having upstanding sidewalls **26** around the outer periphery thereof for receiving and supporting the graphic material (not shown) therein. In addition, the size and configuration of the tray **16** is complementary with the size and configuration of the upper plate **12** whereby the plate **12** may be disposed adjacent the bottom plate **24** and within the walls **26** for securely clamping or holding the graphic material in position in the tray **16.** As shown herein, a recess **28** is provided in the sidewalls **26** of the tray **16** for receiving a complementary outwardly extending tap or flange **30** provided in the plate **12.** The tab **30** is preferably extended slightly behond the recess **28** in the closed position of the plate **12** against the bottom **24** of the tray **16,** as shown in FIG. **2,** for facilitating manual grasping of the plate **12** for pivoting thereof toward the open position shown in FIG. **1.**

The box **16** is further pivoted with a chamber of housing **32** extending transversely thereacross one end thereof for housing suitable battery support bracket means (not shown), bulb receiving socket means (not shown), and usual on and off switch (not shown) as is well known or an electrical plug member and socket whereby a suitable extension cord type member (not shown) may be utilized for supplying power from a source of electricity to a relatively small electric bulb **34,** all as is well known. A suitable cover member **36** (FIG. **1**) is removably secured over the open upper end of the chamber or housing **32** for protection of the electrical components, and is substantially flush with the plane of the bottom plate **24** for cooperating therewith to provide efficient support for the graphic material disposed within the tray **16.** The cover member **36** is provided with a suitable recess or cut-away portion **38** for clearance of the bulb **34.** The bulb **34** extends upwardly beyond the upper face of the plate **24** as clearly shown in FIG. **1,** and the plate **12** is provided with a bore **40** for receiving the bulb **34** therein when the plate **12** is in the closed position adjacent the bottom plate **24.**

As hereinbefore set forth, and as particularly described in my aforementioned co-pending application, the face **12***a* of the plate **12** is frosted in such a manner as to preclude interference with the visual inspection of the graphic material as viewed through the transparent plate **12.** The bulb **34** emits light into the plate **12** thorugh the edges of the bore **40** and the light is dispersed evenly thorugh the plate **12** for distributing the light in a manner for efficiently illuminating the graphic material and precluding reflection of the light into the eyes of the user of the chart board **10.**

The cover member **36** may be readily removed to permit access to the interior of the chamber **32** in order to facilitate installation or replacement of batteries, the bult **34,** or the like. It is preferable to utilize two AA penlight batteries and one **222** penlight bulb, but not limited thereto. In addition, a strip of foam material, or the like (not shown) may be provided on the exposed upper surface of the cover member **36,** if desired, to provide a slight cushioning for the graphic material in the tray **16,** and for facilitating frictional holding of the material on the plate **24** when the plate **12** is in the open position. It is also anticipated that a substantially open slotted cylindrical or open sleeve member **42** may be provided along one side portion of the tray **16** for receiving and supporting a pencil, writing pen, or the like.

A suitable gripper element **44,** such as that sold under the trade name Velcro is cemented, glued, or otherwise secured to the bottom or under surface **24***b* or the tray **16** as shown in FIG. **4.** Velcro is a tape type connecting device which normally comprises complementary tape members which adhere to each other readily upon being pressed together manually, and which readily part or disconnect upon manual pressure urging the complementary tapes in opposite directions away from each other. The tape or connecting element **44** cooperates with complementary tape portions provided on clamping elements for securing the chart board **10** thereto as will be hereinafter set forth.

Referring more particularly to FIGS. **3** and **5,** a clamping apparatus generally indicated at **46** is shown for clamping or securing the board **10** to the steering wheel **48** of an aircraft, or the like. The clamping apparatus **46** comprises a substantially flat supporting plate **50** having a pair of spaced strap members **52** and **54** provided on one face thereof. The straps **52** and **54** are substantially identical and are secured in substantially parallel relationship and spaced apart a sufficient distance for spanning the width of the usual steering column portion **56** immediately adjacent the wheel **48.** The strap members **52** and **54** each have one end thereof rivited, bolted, or otherwise secured to the plate **50** and the opposite ends thereof free, as particularly shown in FIG. **3.** The straps **52** and **54** are preferably constructed from a suitable plastic material or metal which is sufficiently flexible to provide a spring-like action for the strap members, and are preferably coated with a suitable rubber or plastic coating for precluding damage to the steering wheel **48.** The spring action of the straps **52** and **54** permits the straps to flex for permitting insertion of the steering wheel **48** through the open ends of the straps for positioning the plate **50** adjacent the exposed or upper end of the wheel **48** as shown in FIG. **3,** but sufficiently stiff to securely hold the plate **50** in position thereon.

A gripping element **58** of the Velcro type and complementary to the gripping element **44** is glued, cemented, or otherwise secured to the face of the plate **50** opposite the strap members **52** and **54.** The gripping element **58** is exposed when the plate **50** is secured to the steering wheel **48,** and the chart board **10** may be readily secured to the plate **50** by positioning the grip-

ping element **44** against the gripping element **58** with sufficient pressure whereby the two elements engage each other, as is well known in the use of the Velcro type tape grippers. The clamping apparatus **46** is so constructed as to position the plate **50** on the steering wheel **48** at the most desirable angle for supporting the chart holder **10** at the most convenient angular position for viewing thereof and for precluding interference with the normal use or operation of the steering wheel **48,** as will be readily apparent from FIGS. **2** and **3.**

The graphic material (not shown) to be held and viewed by the chart holder **10** may be placed in the tray **16** by manually raising the front plate **12** to the position shown in FIG. **1.** The plate **12** may then be lowered into the normal position thereof adjacent the upper face of the graphic material for clamping the material between the plates **12** and **24.** As hereinbefore set forth, the preponderance of weight provided by the bracket **18** with respect to the position of the hinge **14** assures that the plate **12** will normally remain in position in the tray **16** until it is desired to lift the plate **12** for any reason. The chart holder **10** may then be secured to the clamping apparatus **46,** or the holder **10** may be secured to the clamping apparatus **46** prior to placing the graphic material therein, as desired. In the self-contained battery operated embodiment, the on-off switch (not shown) may be manipulated in the usual manner for connecting the batteries with the bulb **34** to provide illumination of the graphic material by dispersing the light evenly through the plate **12** as hereinfefore set forth. In the embodiment of the apparatus **10** wherein electrical connections are provided for use with the usual extension cord, the cord may be utilized in the normal manner for connecting the power supply of the apparatus **10** with the power supply system of the aircraft or vehicle for illumination of the bulb **34.**

When it is desired to remove the chart holder **10** from the steering wheel **48,** sufficient manual pressure may be applied to the tray **16** for disengaging the connecting elements **44** and **58** whereby the holder **10** may be released from the support position thereof.

Referring to FIGS. **6** and **7,** another clamping apparatus is depicted at **60** for securing the chart board **10** to the steering wheel **48.** The clamping device **60** comprises a pair of substantially identical elongated substantially V-shaped arm members **62** and **64** adapted for encircling the steering column **56** in a manner as will be hereinafter set forth. Outwardly extending flanges **66** and **68** extend along the greater portion of the length of the opposite sides of the arm **62** for mating with complementary outwardly extending flanges **70** and **72** provided along the opposite sides of the arm **64.** The abutting faces of the flanges **66–70** and **68–72** are provided with the mating connecting elements or tapes of Velcro tape, as hereinbefore set forth, whereby the arms **62** and **64** may quickly and easily be disposed around the steering column **56** and secured thereabout by applying manual pressure for locking the flanges **66–70** and **68–72** together.

In addition, the arm **62** is provided with a pair of oppositely disposed outwardly extending tabs **74** (only one of which is shown in FIG. **6**) spaced from the flanges **66** and **68,** respectively, for mating with complementary tabs **76** (only one of which is shown in FIG. **6**) similarly provided on the arm **64.** The tabs **74** and **76** are preferably not provided with the Velcro tape, but are removably secured together with suitable bolts **78,** or the like, for precluding any accidental disengagement of the arms **62** and **64** from the steering column **56.**

A flat plate **80** generally similar to the plate **50** is carried by at least one of the arms **62** and **64** and is disposed immediately in front of the steering wheel **48** and at an angle when the clamping apparatus **60** is secured to the wheel **48,** as clearly shown in FIG. **6.** As shown in FIG. **6,** a pair of spaced strips of one element of Velcro tape **82** are glued, cemented, or otherwise secured to the exposed face **80***a* for cooperating with the Velcro tape provided on the rear surface of the chart board **10** for securing the chart board **10** to the clamping device in the manner as hereinbefore set forth in connection with the clamping device **46.** It will be apparent that any suitable spacing or arrangement of the Velcro tape on the board **80** may be provided as required for cooperating with the tape **44** on the chart board **10.**

Referring now to FIGS. **8** and **9,** modifications of the connecting elements for the chart board **10** are depicted for versatility of use for the chart board. For example, the rear of the chart board **10** as shown in FIG. **8** is provided with a pair of substantially parallel, transversely extending spaced Velcro tape strips **84** for engaging similarly spaced complementary Velcro tape strips (not shown) providing on the clamping apparatus with which the chart board **10** is to be utilized. As shown in FIG. **9,** the chart board **10** is provided with a pair of substantially parallel, longitudinally extending spaced Velcro tape strips **86** for engaging similarly spaced Velcro tape strips (not shown) provided on the clamping apparatus with which the chart board **10** is to be utilized.

With regard to FIG. **10,** a modification of the chart board **10** for securing thereof to the windowsill (not shown) or the like, or an aircraft is shown wherein a pair of oppositely disposed arcuate slots **88** and **90** are provided on one face of a connection board **92,** and a pair of substantially identical pivot connection points or bores **92** and **94** are also provided thereon and spaced from the arcuate slots **88** and **90** whereby the connection board **92** may be secured to either the right or left hand windowsill or an aircraft. The opposite face of the board **92** is provided with Velcro tape similar to that hereinbefore set forth for receiving the chart board **10** thereagainst. When the board **92** is secured to one of the windowsills, the pivot point **94** and the arcuate slot **88** will be used; whereas the pivot point **92** and arcuate slot **90** will be used for securing the board **92** to the opposite windowsill. The chart board **10** may be secured to the exposed side of the board **92** in the manner as hereinbefore set forth.

Referring now to FIGS. **11, 12,** and **13,** and **14,** a further modification of the chart board is depicted generally at **96** which comprises a substantially flat back up plate **98** having the opposite ends thereof substantially cylindrical as shown at **100** and **102** for a purpose as will be hereinafter set forth. A housing **104** is provided along one edge of the flat plate **98** and is open at the top thereof adjacent the plate **98** whereby suitable electrical components (not shown) may be mounted therein. An upper transparent plate **106** is hingedly secured at **108** to the housing **104** and is adapted for normal disposition against the flat plate **98.** The plate **106** is generally similar to the plate **12** and is provided for the same purpose. A plurality of electric light bulbs are embedded in the plate **106** along the side thereof in

alignment with the housing **104** as shown at **110** and emit light which is dispersed through the plate **106** as hereinbefore set forth. Whereas the unit **96** may be self-contained through the use of batteries, as hereinbefore set forth, as shown in FIGS. **11** through **14** it is preferable to provide suitable electrical connections in the housing **104** and particularly a plug or socket **112** (FIGS. **13** and **14**) for connecting an electrical cord (not shown) with the electrical connections, said electrical cord having a suitable plug (not shown) on the outer end thereof for connection with the wiring system of the aircraft, as is well known. In addition, the usual on-off switch **114** is provided and, if desired, a rheostat **116** may be provided for the usual actuation of the bulbs **110**.

A substantially circular plate **118** having an arcuate cross-sectional configuration complementary to the thigh or leg of an individual, as is well known in knee boards of this type, is pivotally secured at **120** to the plate **98** in any suitable manner. A strap member **122** constructed from a Velcro tape is suitable secured to the knee support plate **118** in any well known manner and is sufficiently long to extend around the leg or thigh of the user, as is well known. One end of the strap **122** is provided with the usual buckle type member **124** for receiving the opposite end **126** of the strap **122** therethrough. The said opposite end **126** of the strap **122** is constructed of the matching or complementary Velcro tape with respect to the remainder of the strap **122** whereby the end **126** may be quickly and easily connected or locked around the extremity of the user, thus providing a substantially infinitely variable size for the strap for versatility of use of the device **96**.

Of course, whereas the knee support plate **118** is depicted herein as being permanently mounted on the plate **98**, it is to be understood that the Velcro type connection may be provided between the plate **118** and the plate **98** in the manner as hereinbefore set forth, if so desired.

The knee board **96** is particularly designed and constructed for facilitating the holding of graphic material which is in pad form, although it will be readily apparent that individual sheets of data may be utilized therewith, if desired. As particularly shown in FIG. **14**, a pad **128** of charts, or other graphic materials or data sheets, may be disposed on the plate **98** when the plate **106** is pivoted about the hinge **108** into an open position (not shown). The pad **128** may be opened to expose the particular data sheet which is to be viewed or referred to, and the remaining portions or sheets may be folded to the back of the pad as shown at **130**. These sheets may be disposed in one of the cylindrical members such as the member **102** whereby the sheets will be retained and protected during use of the pad. The plate **106** may be placed in the normal position thereof adjacent the uppermost or exposed sheet of the pad **128** as shown in the drawings. The plate **118** may be disposed adjacent the upper portion of the leg of the user in the proximity of the knee or at substantially any desired convenient position for the user, and the strap **122** may be quickly and easily disposed around the leg and quickly fastened securely in position by the complementary Velcro tape members from which the strap is constructed. The electrical connections may be connected with the power supply of the aircraft, as is well known, and the on-off switch **114** may be utilized for activating the bulbs **110** in order that the data secured on the device **96** may be efficiently viewed in a manner substantially precluding glare, and as hereinbefore set forth. Of course, the pad **128** may be removed and replaced while the device **96** is secured on the body of the user.

It will be apparent that many data sheets are of somewhat greater length than the usual type of charts or maps used by pilots, and the like. In this instance, the overall length of the support board, such as the tray **16**, or a flat plate, may be constructed of a compatible length with the material for which the chart holder is to be used. It may be desirable to lay the chart holder on a table top, or the like, and as a result, it may be desirable to eliminate any clamping or gripping elements on the holder for this type of use.

From the foregoing it will be apparent that the present invention provides a novel holder for graphic materials which may be readily converted for being secured to substantially any desired type of support member. A plurality of clamping devices are provided for clamping to substantially any desired support member, and in turn for quickly and easily receiving the chart holder in a secured position thereon. The use of complementary Velcro tape members provides a versatility of use for the chart board, not only in adaptation thereof for securement to a variety of support members, but also in the quick and easy installation or removal of the chart board from the clamping members. The novel holder for graphic materials also provides an efficient illumination of the material disposed therein.

Whereas the present invention has been described in particular relation to the drawings attached hereto, it should be understood that other and further modifications, apart from those shown or suggested herein, may be made within the spirit and scope of this invention.

What is claimed is:

1. A device for holding and illuminating graphic materials for aircraft pilots and comprising support board means for receiving the materials thereon, transparent upper plate means hingedly secured to the support board for cooperating therewith to secure the material on the support board and permit viewing thereof, illuminating means carried by the transparent plate means for illumination of the materials, clamping means for securing the support board to a support member, and Velcro tape means provided on said clamping means for securing the support board to the support member.

2. A device for holding and illuminating graphic materials as set forth in claim **1** wherein the clamping means comprises a substantially circular plate having an arcuate cross-sectional configuration conforming to a body portion of a person, and said Velcro tape means comprises a strap member carried by the circular plate for encircling the said body portion and securing of the device thereon.

3. A device for holding and illuminating graphic materials as set forth in claim **1** wherein the clamping means comprises plate means, connecting means carried by the plate means for connection with the support member, and the Velcro tape means is provided on the clamping means and the support board means for securing the support board means to the clamping means.

4. A device for holding and illuminating graphic materials as set forth in claim **1** wherein the illuminating means comprises electrical power source means, and electric bulb means extending into the transparent upper plate means for dispersing light rays evenly therethrough.

5. A device for holding and illuminating graphic materials as set forth in claim 4 wherein the electric bulb means comprises a single bulb carried by the support board means, and said transparent upper plate means is provided with a bore for receiving the bulb therein when the upper plate means is disposed in the normal position thereof in the proximity of the support board means.

6. A device for holding and illuminating graphic materials as set forth in claim 4 wherein the electric bulb means comprises a plurality of bulbs carried by the transparent upper plate means and spaced along one side edge thereof.

7. A device for holding and illuminating graphic materials as set forth in claim 1 wherein the support board means comprises a shallow open tray member for receiving the graphic material and the transparent upper plate therein.

8. A device for holding and illuminating graphic materials as set forth in claim 7 wherein the tray member is provided with recess means, and tab means is provided on the transparent upper plate means for disposition within the recess means in the normal position of the upper plate means in the tray member for facilitating lifting of the upper plate means to provide access to the tray member.

9. A device for holding and illuminating graphic materials as set forth in claim 1 wherein the support board means comprises a substantially flat plate member for receiving the graphic materials thereon, substantially cylindrical sleeve members provided at the opposite ends of the flat plate member for facilitating holding of the graphic materials thereon, and said transparent upper plate means is hingedly secured to one side of the flat plate member between the sleeve members.

10. A device for holding and illuminating graphic materials comprising substantially flat elongated support board means for receiving and supporting the graphic materials thereon, a substantially flat transparent plate hingedly secured to the support board means adapted for disposition adjacent the support board means for securing the graphic materials thereon while permitting visual inspection thereof, said transparent plate hingedly secured to the support board a short side of the support board, electrical power source, illuminating means operably connected with the power source for actuation thereby, said illuminating means cooperating with the transparent plate means for dispersing illumination evenly therethrough for efficient illumination of the graphic materials.

* * * * *