May 26, 1959 N. A. DALIN 2,888,251

APPARATUS FOR EFFECTING HEAT EXCHANGE BETWEEN TWO FLUID MEDIA

Filed Oct. 2, 1957

FIG.1.

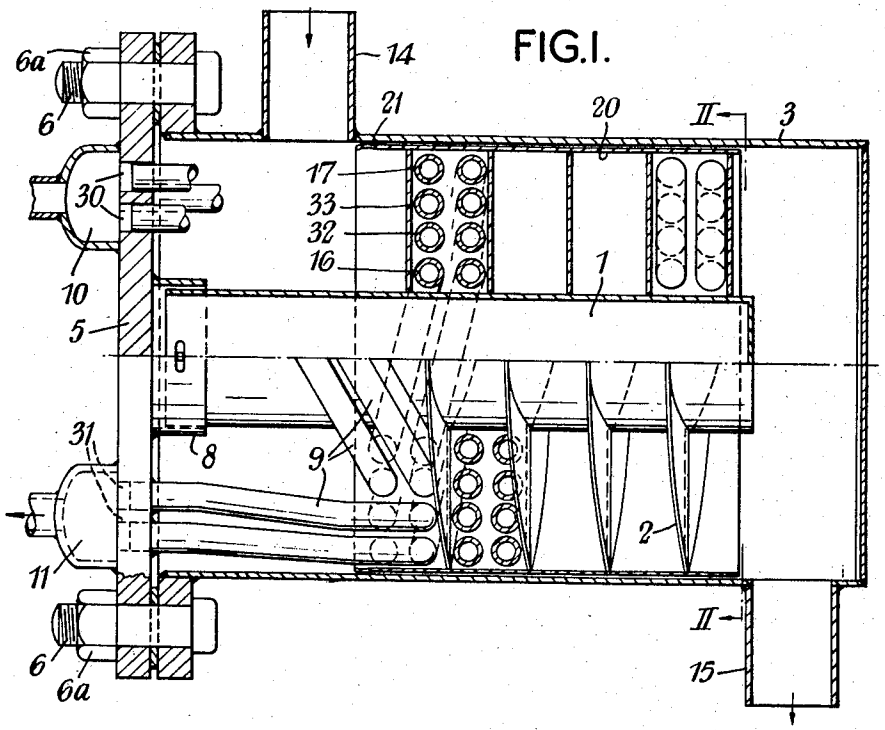

FIG.2.

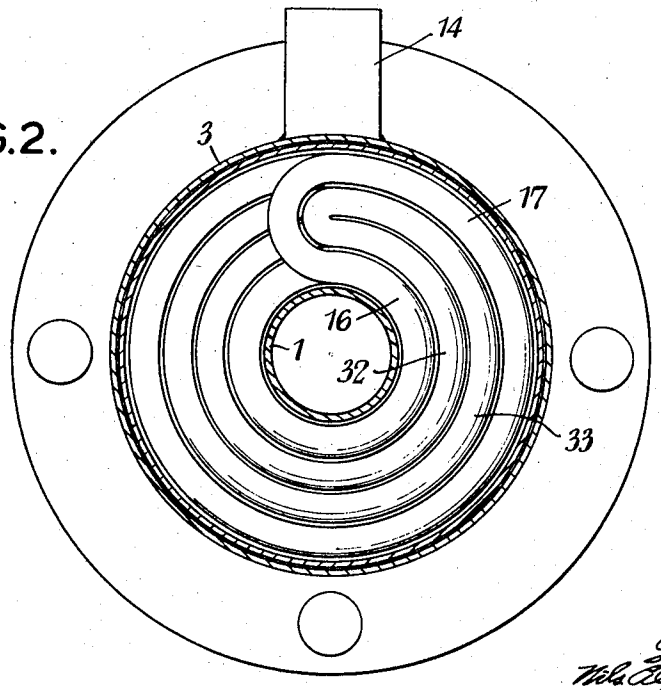

Inventor,
Nils Algot Dalin
By
Pennie, Edmonds, Morton, Barrows & Taylor
Attorneys

United States Patent Office 2,888,251 Patented May 26, 1959

2,888,251

APPARATUS FOR EFFECTING HEAT EXCHANGE BETWEEN TWO FLUID MEDIA

Nils Algot Dalin, Burbank, Calif.

Application October 2, 1957, Serial No. 687,661

Claims priority, application Sweden October 10, 1956

6 Claims. (Cl. 257—235)

This invention relates to apparatus for effecting heat exchange between two fluid media and, more particularly, to such apparatus providing paths respectively for the flow of two fluid media in indirect heat exchange relationship and having at least one of the flow paths shaped after the manner of a screw thread.

In one form of apparatus of the kind set forth the heat exchange surfaces are provided by a central tube having mounted thereon a helical fin, one fluid medium being made to flow through the tube and the other fluid medium being made to flow around the helical path provided by the fin. A disadvantage of this form of apparatus is that, during operation, the temperature across the fin falls steeply from the inner edge of the fin in contact with the tube to the outer edge of the fin. Accordingly, the rate of heat transfer will be greater in the neighbourhood of the tube than at the outer edge of the fin. For this reason to obtain a given rate of heat transfer the area of the fin has to be made larger than it would be if there were no temperature gradient across the fin in the radial direction.

In another form of apparatus of the kind set forth, the fin is formed by tubes wound in coils one on top of the other around a central tube and the fluid medium which was passed through the central tube is now passed through the tube coils so that the temperature of the heat exchange surface of the fin is uniform or substantially uniform. However, in this form of apparatus it is difficult to wind the tubes sufficiently tightly so that flow of fluid between the tubes of the fin is prevented and, any flow of fluid between the tubes of the fin reduces heat exchange by reducing the effective length of the helical path provided by the fin for fluid flowing outside the fin tubes. Even where the tube coils of the fin are initially sufficiently closely wound to prevent fluid flow between the tubes, spaces tend to appear between the tubes in the course of operation. Moreover, the cost of providing a fin of closely wound tube coils is very high. Another disadvantage of this form of apparatus is that because of contact between adjacent tube coils of the fin a part of the heat exchange surface of the tube coils is not effectively traversed by fluid flowing outside the tube coils and further, accumulation of dirt between the tubes of the fin rapidly reduces the area of effective heat exchange surface. Still another disadvantage is that the lengths of the individual tube coils making up the fin differ considerably, for example the total length of the innermost tube coil is very much less than that of the outermost tube coil. This results in different pressure drops across the tube coils and, therefore, different rates of flow through the respective tubes which gives rise to ineffective heat transfer.

An object of the present invention is to provide apparatus of the kind set forth in which the disadvantages inherent in the two known forms of apparatus which have been described above are largely if not wholly overcome.

According to the present invention, apparatus for effecting heat exchange between two fluid media, comprises a

channel shaped after the manner of a screw thread and constituting a first fluid flow path, an inlet header and an outlet header disposed at one and the same end of the channel, and a plurality of tube coils extending along and within the channel and constituting a second fluid flow path extending in substantially parallel flow relationship with the first fluid flow path, the tube coils being of approximately the same length and cross-sectional area and each including two tube sections respectively extending from the inlet and outlet headers rearwardly along the channel and so connected at ends thereof remote from the inlet and outlet headers that the tube coils by rotation thereof in one sense relative to the channel can be removed as a unit from the channel, whilst, by rotation relative to the channel in the reverse sense, the tube coils can be replaced as a unit in the channel.

The invention will now be described, by way of example, with reference to the accompanying drawings, in which:

Figure 1 is a longitudinal elevation partly in section of apparatus for effecting heat exchange between two fluid media; and

Figure 2 is a view taken on the line II—II of Figure 1 and looking in the direction indicated by the arrows.

In the drawings, apparatus for effecting heat exchange between two fluid media includes a cylindrical casing **3** having inlet and outlet means in the form of an inlet pipe **14** and an outlet pipe **15** respectively welded to the casing. The inlet pipe **14** is disposed adjacent a forward, open end of the casing and the outlet pipe **15** is disposed adjacent a rearward, closed end of the casing. At the open end thereof, the casing **3** is provided with a radially, outwardly extending flange to which is clamped in fluid tight fashion by bolts **6** and nuts **6a** a cover plate **5** for the forward end of the casing **3**, the cover plate being formed with two groups **30** and **31** of apertures respectively spaced at equal distances from the centre of the plate. Into the rearward ends of the apertures of the group **30** are fitted in fluid tight manner, the inlet ends of four tube coils **9** which have equal cross-sectional areas and are hereinafter more fully described, whilst the forward ends of the apertures of the group open into an inlet header or distributing chamber **10** welded on to the forward side of the plate **5**. Similarly, into the rearward ends of the apertures of the group **31** are fitted, in fluid tight manner, outlet ends of the tube coils **9** whilst the forward ends of the apertures of the group **31** open into an outlet header or collecting chamber **11** welded on to the forward side of the plate **5**.

Between the aperture groups **30** and **31** and welded to the rearward side of the plate **5** at the centre of the plate is a collar **8** within which is removably secured a tube or core **1** which extends along the axis of the casing from the forward end thereof to a point spaced a short distance from the rearward closed end of the casing. The tube **1** at the rearward end thereof is closed.

Disposed within and closely fitting the casing **3** is a cylindrical shell **20** which extends around the tube **1** between the inlet pipe **14** and the outlet pipe **15** of the casing and, at its forward end, the shell **20** is pressed radially outwardly as shown at the reference **21** into a substantially fluid tight fit with the casing **3**.

Provided between the tube **1** and the shell **20** is a helical fin **2** which is secured in fluid tight fashion, at the inner edge thereof, to the tube **1** and, at its outer edge to the shell **20**. It will be appreciated that the fin **2** could be cast integrally with the tube **1** or with the shell **20**. At all events the structure formed by the tube **1**, the fin **2** and the shell **20** provides a fluid tight helical channel constituting a first fluid flow path for the passage of fluid admitted to the casing **3** from the inlet pipe **14**

and discharged from the casing through the outlet pipe 15.

The four tube coils 9 which constitute a second flow path for the passage of fluid in heat exchange relationship with the fluid flowing from the inlet pipe 14 to the outlet pipe 15 of the casing by way of the helical channel, extend from the inlet ends thereof which open into the inlet header 10 and are wound, within the channel provided by the fin 2, in a rearward direction around the tube 1. At or near the end of the channel adjacent the outlet pipe 15, the tube coils are provided with respective return bends from which the tube coils are wound in a forward direction, within the channel provided by the fin 2, around the tube 1 the outlet end of each tube coil eventually opening into the outlet header 11. Thus it will be seen that each of the tube coils includes a rearwardly extending coil section and a forwardly extending coil section, the sections being connected at the rear end of the helical channel by a return bend. There are, therefore, two tube coils of equal length each having a rearward coil section 16 and a forward coil section 17 and two tube coils of equal length each having a rearward coil section 32 and a forward coil section 33. Moreover, since the length of the section 16 is smaller than that of the section 32 by virtue of the smaller coil diameter of the section 16 and, since the length of the section 17 is greater than that of the section 33 because of the greater coil diameter of the section 17, a coil made up of sections 16 and 17 is approximately equal in length to a coil made up of sections 32 and 33. The pressure drop across each of the tube coils 9, during operation, is, therefore, approximately the same.

Normally, the heat exchange apparatus described is employed to heat oil for an oil burner. To this end hot water or steam is supplied to the tube coils 9 by way of the inlet header 10 and gives up heat to oil admitted to the casing through the inlet pipe 14. The hot water or steam flows through the tube coils 9 to the outlet header 11 whilst oil flows along the helical channel provided by the tube 1, fin 2 and shell 20, to the outlet pipe 15 of the casing 3. It will be understood that as the volume of oil which traverses the rearward coil sections 16 and 32 is appreciably less than that which traverses the forward coil sections 17 and 33 and as the lengths of the sections 16 and 32 are substantially less than the lengths of the sections 17 and 33, a large proportion of the heat exchange is transferred in counterflow heat exchange relationship.

For the purposes of repair, inspection or cleaning the apparatus described can readily be dismantled. To this end the nuts 6*a* and bolts 6 are removed and the plate 5 is withdrawn forwardly from the casing 3 thus removing the tube 1, fin 2, shell 20, if this is physically connected to the fin 2, and tube coils 9. Rotation in an appropriate sense of the tube 1 in the collar 8 will then effect removal of the coils 9 from the helical channel provided by the fin 2. To assemble the apparatus, the dismantling operations are carried out in the reverse sequence.

Apparatus for effecting heat exchange between two fluid media made in accordance with this invention is of relatively smaller size, lighter weight, cheaper and easier to produce, more efficient, less apt to get dirty and more accessible for cleaning when required than is either of the known heat exchangers described earlier.

Because the tube coils 9 do not have to be tightly wound to form a fin, no expensive and time consuming winding procedure is involved in the apparatus according to the invention. Also, since no significant radial temperature gradient is established during operation all the heat exchange surface is effectively and economically employed.

What is claimed is:

1. Apparatus for effecting heat exchange between two fluid media, comprising a channel shaped after the manner of a screw thread and constituting a first fluid flow path, an inlet header and an outlet headed disposed at one and the same end of the channel, and a plurality of tube coils extending along and within the channel and constituting a second fluid flow path extending in substantially parallel flow relationship with the first fluid flow path, the tube coils being of approximately the same length and cross-sectional area and each including two tube sections respectively extending from the inlet and outlet headers rearwardly along the channel and so connected at ends thereof remote from the inlet and outlet headers that the tube coils by rotation thereof in one sense relative to the channel can be removed as a unit from the channel, whilst, by rotation relative to the channel in the reverse sense, the tube coils can be replaced as a unit in the channel.

2. Apparatus for effecting heat exchange between two fluid media, comprising a shell, a core extending axially within the shell, a helical fin mounted on an inner edge thereof in fluid tight fashion on the core and at the outer edge thereof in fluid tight fashion within the shell to form a helical channel constituting a first fluid flow path, an inlet header and an outlet header disposed at one and the same end of the channel, and a plurality of tube coils extending along and within the channel and constituting a second fluid flow path extending in substantially parallel flow relationship with the first fluid flow path, the tube coils being of approximately the same length and cross-sectional area and each including two tube sections respectively extending from the inlet and outlet headers rearwardly along the channel and so connected at ends thereof remote from the inlet and outlet headers that the tube coils by rotation thereof in one sense relative to the channel can be removed as a unit from the channel, whilst, by rotation relative to the channel in the reverse sense, the tube coils can be replaced as a unit in the channel.

3. Apparatus as claimed in claim 2, wherein the tube sections of each tube coil are connected at the ends thereof remote from the inlet and outlet headers by a return bend.

4. Apparatus as claimed in claim 2, including a casing in which the shell is mounted, the casing having inlet means adapted to admit fluid flowing in the first flow path to one end of the channel and outlet means for receiving fluid from the channel.

5. Apparatus as claimed in claim 2, including a casing in which the shell is mounted, the casing having outlet means communicating with the first fluid flow path and disposed in the vicinity of the ends of the tube coils remote from the inlet and outlet headers, and the casing having inlet means communicating with the first fluid flow path and disposed in the vicinity of the ends of the tube coils adjacent the inlet and outlet headers.

6. Apparatus as claimed in claim 2, including a casing in which the shell is mounted, the casing being provided at the end thereof adjacent the inlet and outlet headers with an outwardly extending flange, and a plate removably secured in fluid tight fashion to the flange on the casing, the plate having mounted on a front surface thereof the inlet and outlet headers and having apertures within which forward ends of the tube coils are secured and by way of which connection is afforded between the headers and the tube coils.

References Cited in the file of this patent

UNITED STATES PATENTS

1,763,923	Dennison	June 17, 1930
1,769,265	Labus	July 1, 1930
2,713,994	Angelery	July 26, 1955