H. C. PECKHAM.

MUFFLER CUT-OUT.

APPLICATION FILED AUG. 26, 1912.

1,068,528.

Patented July 29, 1913.

Fig. 1

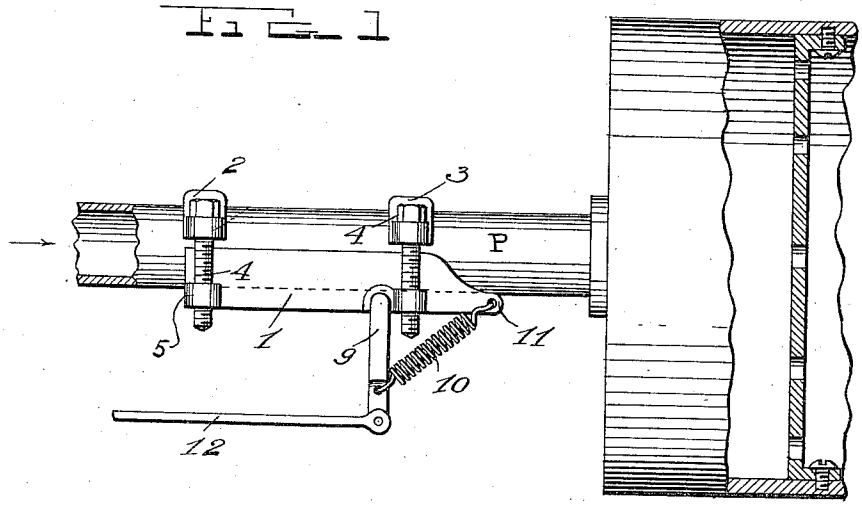

Fig. 2

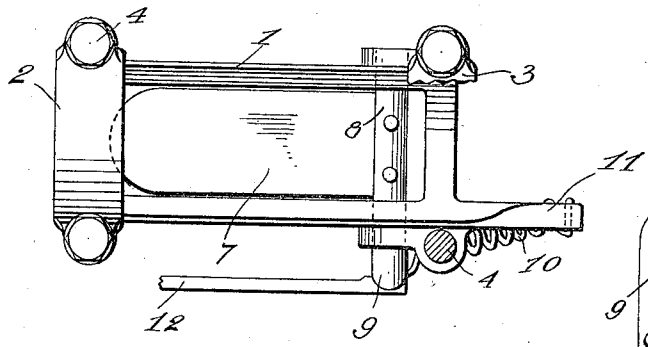

Fig. 4

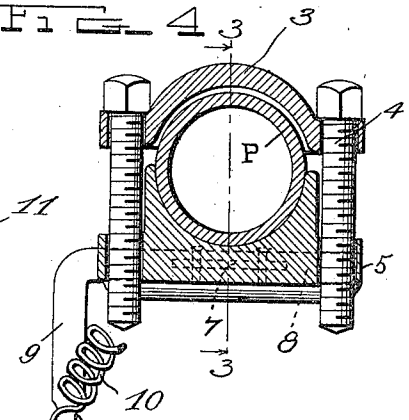

Fig. 3

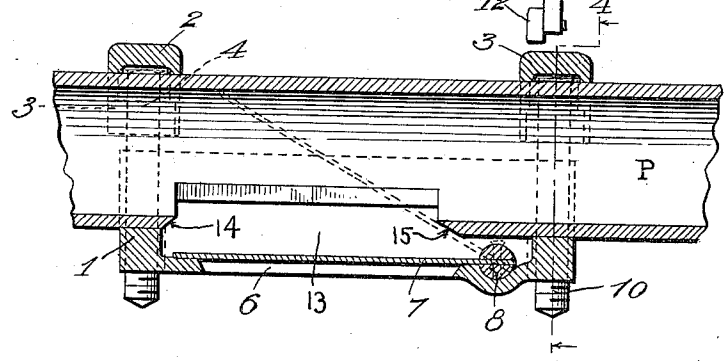

Witnesses

A. Van Loock

L. M. McCall,

Inventor

H. C. Peckham

By H. B. Wilson & Co

Attorneys

COLUMBIA PLANOGRAPH CO., WASHINGTON, D. C.

UNITED STATES PATENT OFFICE.

HAROLD C. PECKHAM, OF BRISTOL, RHODE ISLAND, ASSIGNOR TO AUTO IMPROVEMENTS COMPANY, OF BRISTOL, RHODE ISLAND.

MUFFLER CUT-OUT.

1,068,528. Specification of Letters Patent. Patented July 29, 1913.

Application filed August 26, 1912. Serial No. 717,152.

To all whom it may concern:

Be it known that I, HAROLD C. PECKHAM, a citizen of the United States, residing at Bristol, in the county of Bristol and State of Rhode Island, have invented certain new and useful Improvements in Muffler Cut-Outs; and I do declare the following to be a full, clear, and exact description of the invention, such as will enable others skilled in the art to which it appertains to make and use the same.

This invention relates to improvements in muffler cut-outs for engines, and more especially for the engines of motor vehicles.

One object of the invention is to provide a simple and efficient device of this class for diverting exhaust gases from the muffler, by means of which all the gases are scooped out of the exhaust pipe in advance of the muffler when said cut-out is in operation, and a sharp, clear exhaust obtained similar to the sound produced when no muffler is used, and which renders it easy to detect and locate any skip in the motor when it is not working smoothly and properly.

Another object is to provide a device of this class which when not in use permits all the gases to pass through the muffler, rendering the engine noiseless.

Another object is to produce a cut out which can be applied at almost any point to the exhaust by sawing out an opening in the lower side thereof.

With these and other objects in view, the invention consists of certain novel features of construction, and the combination and arrangement of parts as will be more fully described and claimed.

In the accompanying drawings: Figure 1 represents a side elevation of this improved device applied; Fig. 2 represents a plan view of the casing with parts in section; Fig. 3 is a central vertical longitudinal section thereof on line 3—3 of Fig. 4 and the tongue shown open in dotted lines; Fig. 4 is a transverse section taken on the line 4—4 of Fig. 3 looking in the direction of the arrow.

In the embodiment illustrated, a casting is shown adapted to be secured to the exhaust pipe of a gasolene engine (not shown) such as is used on automobiles and other motor vehicles. This casting is in the shape of a substantially rectangular box 1 with an open top curved to fit the lower face of the pipe P, and with it is employed clamps 2 and 3 which are curved to fit the upper face of said pipe to which the device is to be secured and the ends of which are apertured for the passage therethrough of securing bolts 4 which secure the clamps to the casting, screw threaded apertured ears 5 being provided at the sides of the casting for the reception of these bolts. This casting 1 has an elongated regulated opening 6 in its flat bottom which is normally closed by an upwardly opening tongue 7 fixed to a shaft 8 extending transversely of the casting and mounted in bearings in opposite side walls thereof, one end of the shaft being bent at right angles thereto to form an actuating arm 9 by means of which the tongue is lifted when desired in a manner hereinafter to be described. A stiff coiled spring 10 is secured at one end to the free end of said arm 9 and at its other end to a longitudinal extension 11 at the rear end of the casting 1, said tongue exerting its tension to hold the tongue tightly closed over the opening 6 in the bottom of the box-shaped casting.

A tongue actuating or lifting mechanism is here shown in the form of a cable 12 connected at one end to the free end of the arm 9 and extending forward to be connected with a foot lever mounted within the vehicle to which the device is applied and by means of which said arm is turned against the tension of the spring 10 when it is desired to open the tongue and permit the gases to pass out to the atmosphere without entering the muffler. This tongue 7 is sufficiently wide to close the pipe when opened, forming a diagonally arranged partition, as shown clearly in Fig. 3, whereby all of the gases are cut off from the muffler, said tongue forming practically an end wall in the pipe at the end thereof opposite that through which the gases enter.

To apply this device an opening 13 is cut in the lower side of the exhaust pipe P by any suitable implement, said opening being preferably square or rectangular and of sufficient size to permit the clapper of the tongue 7 to open upwardly therethrough into the pipe when the tongue is raised by a pull being exerted on the cable 12. The opposite ends of the opening 13 are beveled

in opposite directions as at 14 and 15 to facilitate the entering of said tongue through said opening and to adapt it to fit closely against the end 15 of said opening when the tongue is raised, and thereby form a nearly fluid-tight closure for the pipe P. (See Fig. 3.) After placing the casting 1 over the opening in the bottom of the exhaust pipe, and with the side walls of the casting engaging the side walls of the pipe, the clamps 2 and 3 are fitted on the top of the pipe over the apertured ears 5 in the casting and the bolts 4 are passed through the apertures in the clamps and engaged with the screw threaded apertures in the casting whereby the device is securely fastened to the exhaust pipe ready for operation.

A striking feature possessed by this device is the fact that it can be applied at almost any point in the exhaust pipe, by simply sawing the latter transversely and then longitudinally to produce a square opening in its lower side, then passing the clamps 2 and 3 over the pipe and the casting 1 under it and applying the screws 4, and finally connecting up the member 12. It will be seen that the parts take very little space, and therefore they can be attached to the pipe P at a point where the latter runs close to some other part. When in position this cut-out has most of its elements disposed below the pipe, and when its tongue is opened it is raised into the pipe so that the force of the exhaust through the latter blows the soot out of the cut out and keeps it constantly clean.

From the foregoing description taken in connection with the accompanying drawings, the construction and operation of the invention will be readily understood without requiring a more extended explanation.

Various changes in the form, proportion and the minor details of construction may be resorted to without departing from the principle or sacrificing any of the advantages of the invention as claimed.

I claim as my invention:

In a muffler cut-out, the combination with the exhaust pipe from an internal combustion engine, the same provided with a rectangular opening in its lower side; of a box-shaped casting having a flat bottom with a rectangular opening slightly out of register with that in the pipe, the top of the box being curved to conform with the lower face of said pipe and provided with ears at its sides, and an extension at its rear end, clamps passing over said pipe and also provided with ears, screws passing through these ears and engaging those in the casting, a transverse shaft mounted within the latter across the rear end of its opening, a tongue carried by said shaft and adapted to be raised through the opening in the pipe, the outer end of the tongue being rounded to conform with the curvature of the upper side of the pipe, an arm depending from one end of said shaft, a spring connecting the extension and arm, and an actuating element leading forward from the lower end of said arm, for the purpose set forth.

In testimony whereof I have hereunto set my hand in presence of two subscribing witnesses.

HAROLD C. PECKHAM.

Witnesses:
V. C. YOUNG,
FRANK A. INGRAHAM.

Copies of this patent may be obtained for five cents each, by addressing the "Commissioner of Patents, Washington, D. C."