(12) INTERNATIONAL APPLICATION PUBLISHED UNDER THE PATENT COOPERATION TREATY (PCT)

(19) World Intellectual Property Organization
International Bureau

(43) International Publication Date
10 January 2013 (10.01.2013)

WIPO | PCT

(10) International Publication Number
WO 2013/005051 A1

(51) **International Patent Classification**:
B01D 15/18 (2006.01) ***C11C 1/00*** (2006.01)
C11B 3/10 (2006.01) ***C11C 1/08*** (2006.01)

(21) **International Application Number**:
PCT/GB2012/051596

(22) **International Filing Date**:
6 July 2012 (06.07.2012)

(25) **Filing Language**: English

(26) **Publication Language**: English

(30) **Priority Data**:
1111589.6 6 July 2011 (06.07.2011) GB

(71) **Applicant** *(for all designated States except US)*: **BASF PHARMA (CALLANISH) LIMITED** [GB/GB]; PO Box 4, Earl Road, Cheadle Hulme, Cheadle, Cheshire SK8 6QG (GB).

(72) **Inventors; and**

(75) **Inventors/Applicants** *(for US only)*: **KELLIHER, Adam** [NZ/GB]; c/o BASF Pharma (Callanish) Limited, Studio 87, 87 Ridgway, Wimbledon Village, London Greater London SW19 4ST (GB). **MORRISON, Angus** [GB/GB]; c/o BASF Pharma (Callanish) Limited, Studio 87, 87 Ridgway, Wimbledon Village, London Greater London SW19 4ST (GB). **OROSKAR, Anil** [US/US]; c/o Orochem Technologies Inc., 331 Eisenhower Lane South, Lombard, IL 60148 (US). **NAIR REMA, Rakesh Vikraman** [IN/US]; c/o Orochem Technologies Inc., 331 Eisenhower Lane South, Lombard, IL 60148 (US). **AGARWAL, Abhilesh** [IN/US]; c/o Orochem Technologies Inc., 331 Eisenhower Lane South, Lombard, IL 60148 (US).

(74) **Agent**: **SRINIVASAN, Ravi**; J A Kemp, 14 South Square, Gray's Inn, London, Greater London WC1R 5JJ (GB).

(81) **Designated States** *(unless otherwise indicated, for every kind of national protection available)*: AE, AG, AL, AM, AO, AT, AU, AZ, BA, BB, BG, BH, BR, BW, BY, BZ, CA, CH, CL, CN, CO, CR, CU, CZ, DE, DK, DM, DO, DZ, EC, EE, EG, ES, FI, GB, GD, GE, GH, GM, GT, HN, HR, HU, ID, IL, IN, IS, JP, KE, KG, KM, KN, KP, KR, KZ, LA, LC, LK, LR, LS, LT, LU, LY, MA, MD, ME, MG, MK, MN, MW, MX, MY, MZ, NA, NG, NI, NO, NZ, OM, PE, PG, PH, PL, PT, QA, RO, RS, RU, RW, SC, SD, SE, SG, SK, SL, SM, ST, SV, SY, TH, TJ, TM, TN, TR, TT, TZ, UA, UG, US, UZ, VC, VN, ZA, ZM, ZW.

(84) **Designated States** *(unless otherwise indicated, for every kind of regional protection available)*: ARIPO (BW, GH, GM, KE, LR, LS, MW, MZ, NA, RW, SD, SL, SZ, TZ, UG, ZM, ZW), Eurasian (AM, AZ, BY, KG, KZ, RU, TJ, TM), European (AL, AT, BE, BG, CH, CY, CZ, DE, DK, EE, ES, FI, FR, GB, GR, HR, HU, IE, IS, IT, LT, LU, LV, MC, MK, MT, NL, NO, PL, PT, RO, RS, SE, SI, SK, SM,

[Continued on next page]

(54) **Title**: NEW SMB PROCESS

Figure 10

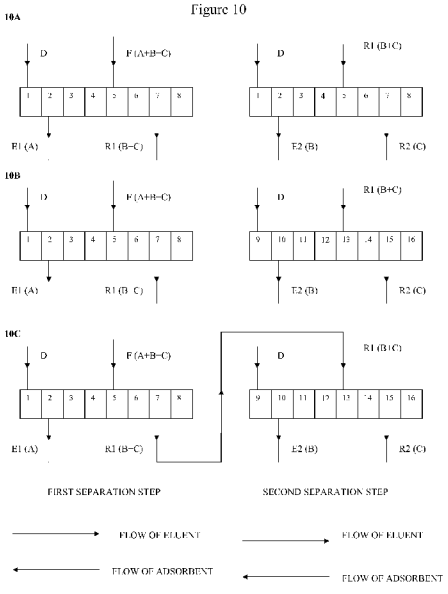

(57) **Abstract**: The present invention provides a chromatographic separation process for recovering a polyunsaturated fatty acid (PUFA) product from a feed mixture, which process comprises the steps of: (i) purifying the feed mixture in a first separation step in a simulated or actual moving bed chromatography apparatus having a plurality of linked chromatography columns containing, as eluent, an aqueous organic solvent, to obtain an intermediate product; and (ii) purifying the intermediate product obtained in (i) in a second separation step using a simulated or actual moving bed chromatography apparatus having a plurality of linked chromatography columns containing, as eluent, an aqueous organic solvent, to obtain the PUFA product; wherein (a) the first and second separation steps are carried out sequentially on the same chromatography apparatus, the intermediate product being recovered between the first and second separation steps and the process conditions in the chromatography apparatus being adjusted between the first and second separation steps such that the PUFA product is separated from different components of the feed mixture in each separation step; or (b) the first and second separation steps are carried out on separate first and second chromatography apparatuses respectively, the intermediate product obtained from the first separation step being introduced into the second chromatography apparatus, and the PUFA product being separated from different components of the feed mixture in each separation step.

WO 2013/005051 A1

TR), OAPI (BF, BJ, CF, CG, CI, CM, GA, GN, GQ, GW, ML, MR, NE, SN, TD, TG).

Published:

— *with international search report (Art. 21(3))*

NEW SMB PROCESS

The present invention relates to an improved chromatographic separation process for purifying polyunsaturated fatty acids (PUFAs) and derivatives thereof. In particular, the present invention relates to an improved simulated or actual moving bed chromatographic separation process for purifying PUFAs and derivatives thereof.

Fatty acids, in particular PUFAs, and their derivatives are precursors for biologically important molecules, which play an important role in the regulation of biological functions such as platelet aggregation, inflammation and immunological responses. Thus, PUFAs and their derivatives may be therapeutically useful in treating a wide range of pathological conditions including CNS conditions; neuropathies, including diabetic neuropathy; cardiovascular diseases; general immune system and inflammatory conditions, including inflammatory skin diseases.

PUFAs are found in natural raw materials, such as vegetable oils and marine oils. Such PUFAs are, however, frequently present in such oils in admixture with saturated fatty acids and numerous other impurities. PUFAs should therefore desirably be purified before nutritional or pharmaceutical uses.

Unfortunately, PUFAs are extremely fragile. Thus, when heated in the presence of oxygen, they are prone to isomerization, peroxidation and oligomerization. The fractionation and purification of PUFA products to prepare pure fatty acids is therefore difficult. Distillation, even under vacuum, can lead to non-acceptable product degradation.

Simulated and actual moving bed chromatography are known techniques, familiar to those of skill in the art. The principle of operation involves countercurrent movement of a liquid eluent phase and a solid adsorbent phase. This operation allows minimal usage of solvent making the process economically viable. Such separation technology has found several applications in diverse areas, including hydrocarbons, industrial chemicals, oils, sugars and APIs.

As is well known, in a conventional stationary bed chromatographic system, a mixture whose components are to be separated percolates through a container. The container is generally cylindrical, and is typically referred to as the column. The column contains a packing of a porous material (generally called the stationary phase) exhibiting a high permeability to fluids. The percolation velocity of each component of the mixture depends on the physical properties of that component so that the components exit from the column successively and selectively. Thus, some of the components tend to fix strongly to the stationary phase and thus will percolate slowly, whereas others tend to fix weakly and exit from the column more quickly. Many different stationary bed chromatographic systems have been proposed and are used for both analytical and industrial production purposes.

In contrast, a simulated moving bed chromatography apparatus consists of a number of individual columns containing adsorbent which are connected together in series. Eluent is passed through the columns in a first direction. The injection points of the feedstock and the eluent, and the separated component collection points in the system, are periodically shifted by means of a series of valves. The overall effect is to simulate the operation of a single column containing a moving bed of the solid adsorbent, the solid adsorbent moving in a countercurrent direction to the flow of eluent. Thus, a simulated moving bed system consists of columns which, as in a conventional stationary bed system, contain stationary beds of solid adsorbent through which eluent is passed, but in a simulated moving bed system the operation is such as to simulate a continuous countercurrent moving bed.

Processes and equipment for simulated moving bed chromatography are described in several patents, including US 2,985,589, US 3,696,107, US 3,706,812, US 3,761,533, FR-A-2103302, FR-A-2651148 and FR-A-2651149, the entirety of which are incorporated herein by reference. The topic is also dealt with at length in "Preparative and Production Scale Chromatography", edited by Ganetsos and Barker, Marcel Dekker Inc, New York, 1993, the entirety of which is incorporated herein by reference.

An actual moving bed system is similar in operation to a simulated moving bed system. However, rather than shifting the injection points of the feed mixture and the

eluent, and the separated component collection points by means of a system of valves, instead a series of adsorption units (i.e. columns) are physically moved relative to the feed and drawoff points. Again, operation is such as to simulate a continuous countercurrent moving bed.

Processes and equipment for actual moving bed chromatography are described in several patents, including US 6,979,402, US 5,069,883 and US 4,764,276, the entirety of which are incorporated herein by reference.

Purification of PUFA products is particularly challenging. Thus, many suitable feedstocks for preparing PUFA products are extremely complex mixtures containing a large number of different components with very similar retention times in chromatography apparatuses. It is therefore very difficult to separate certain PUFAs from such feedstocks. However, a high degree of purity of PUFA products is required, particularly for pharmaceutical and nutraceutical applications. Historically, therefore, distillation has been used when high purity PUFA products are required. There are, however, significant drawbacks to using distillation as a separation technique for delicate PUFAs as discussed above.

As yet, no chromatographic technique has been made available for achieving high purity PUFA products, for example greater than 95 or 97% purity, in particular from commercially available feedstocks such as fish oils.

A typical in a simulated moving bed chromatography apparatus is illustrated with reference to Figure 1. The concept of a simulated or actual moving bed chromatographic separation process is explained by considering a vertical chromatographic column containing stationary phase S divided into sections, more precisely into four superimposed sub-zones I, II, III and IV going from the bottom to the top of the column. The eluent is introduced at the bottom at IE by means of a pump P. The mixture of the components A and B which are to be separated is introduced at IA + B between sub-zone II and sub-zone III. An extract containing mainly B is collected at SB between sub-zone I and sub-zone II, and a raffinate containing mainly A is collected at SA between sub-zone III and sub-zone IV.

In the case of a simulated moving bed system, a simulated downward movement of the stationary phase S is caused by movement of the introduction and collection points relative to the solid phase. In the case of an actual moving bed system, simulated downward movement of the stationary phase S is caused by movement of the various chromatographic columns relative to the introduction and collection points. In Figure 1, eluent flows upward and mixture A + B is injected between sub-zone II and sub-zone III. The components will move according to their chromatographic interactions with the stationary phase, for example adsorption on a porous medium. The component B that exhibits stronger affinity to the stationary phase (the slower running component) will be more slowly entrained by the eluent and will follow it with delay. The component A that exhibits the weaker affinity to the stationary phase (the faster running component) will be easily entrained by the eluent. If the right set of parameters, especially the flow rate in each sub-zone, are correctly estimated and controlled, the component A exhibiting the weaker affinity to the stationary phase will be collected between sub-zone III and sub-zone IV as a raffinate and the component B exhibiting the stronger affinity to the stationary phase will be collected between sub-zone I and sub-zone II as an extract.

It will therefore be appreciated that the conventional simulated moving bed system schematically illustrated in Fig. 1 is limited to binary fractionation.

Accordingly, there is a need for a simulated or actual moving bed chromatographic separation process that can separate PUFAs or their derivatives from both faster and slower running components (i.e. more polar and less polar impurities), to produce high purity PUFA products from commercially available feedstocks such as fish oils. It is further desirable that the process should involve inexpensive eluents which operate under standard temperature and pressure conditions.

Summary of the invention

It has now been surprisingly found that a PUFA product can be effectively purified from commercially available feedstocks such as fish oils by simulated or actual moving bed apparatus using an aqueous organic solvent eluent. The present invention therefore provides a chromatographic separation process for recovering a

polyunsaturated fatty acid (PUFA) product from a feed mixture, which process comprises the steps of:

(i) purifying the feed mixture in a first separation step in a simulated or actual moving bed chromatography apparatus having a plurality of linked chromatography columns containing, as eluent, an aqueous organic solvent, to obtain an intermediate product; and

(ii) purifying the intermediate product obtained in (i) in a second separation step using a simulated or actual moving bed chromatography apparatus having a plurality of linked chromatography columns containing, as eluent, an aqueous organic solvent, to obtain the PUFA product; wherein

(a) the first and second separation steps are carried out sequentially on the same chromatography apparatus, the intermediate product being recovered between the first and second separation steps and the process conditions in the chromatography apparatus being adjusted between the first and second separation steps such that the PUFA product is separated from different components of the feed mixture in each separation step; or

(b) the first and second separation steps are carried out on separate first and second chromatography apparatuses respectively, the intermediate product obtained from the first separation step being introduced into the second chromatography apparatus, and the PUFA product being separated from different components of the feed mixture in each separation step.

Also provided is a PUFA product obtainable by the process of the present invention.

The PUFA products produced by the process of the present invention are produced in high yield, and have high purity. Further, the content of the distinctive impurities which typically arise from distillation of PUFAs is very low. As used herein, the term "isomeric impurities" is used to denote those impurities typically produced during the distillation of PUFA-containing natural oils. These include PUFA isomers, peroxidation and oligomerization products.

Description of the Figures

Figure 1 illustrates the basic principles of a simulated or actual moving bed process for separating a binary mixture.

Figure 2 illustrates a first preferred embodiment of the invention which is suitable for separating EPA from faster and slower running components (i.e. more polar and less polar impurities).

Figure 3 illustrates a second preferred embodiment of the invention which is suitable for separating DHA from faster and slower running components (i.e. more polar and less polar impurities).

Figure 4 illustrates in more detail the first preferred embodiment of the invention which is suitable for separating EPA from faster and slower running components (i.e. more polar and less polar impurities).

Figure 5 illustrates in more detail the second preferred embodiment of the invention which is suitable for separating DHA from faster and slower running components (i.e. more polar and less polar impurities).

Figure 6 illustrates in more detail an alternative method for the first preferred embodiment of the invention which is suitable for separating EPA from faster and slower running components (i.e. more polar and less polar impurities).

Figure 7 illustrates in more detail an alternative method for the second preferred embodiment of the invention which is suitable for separating DHA from faster and slower running components (i.e. more polar and less polar impurities).

Figure 8 illustrates a particularly preferred embodiment of the invention for purifying EPA from faster and slower running components (i.e. more polar and less polar impurities).

Figure 9 illustrates an alternative method for a particularly preferred embodiment of the invention for purifying EPA from faster and slower running components (i.e. more polar and less polar impurities).

Figure 10 illustrates three ways in which the chromatographic separation process of the invention may be carried out.

Figure 11 shows an HPLC analysis of an EPA-rich feedstock which can suitably be used as the feed mixture in the process of the present invention.

Figure 12 shows HPLC analyses of the raffinate (R) and extract (E) streams from the first separation step of a process according to the present invention.

Figure 13 shows HPLC analyses of the raffinate (R) and extract (E) streams from the second separation step of a process according to the present invention.

Figure 14 shows a more detailed HPLC analysis of the extract stream from the second separation step of a process according to the present invention.

Figure 15 shows a GC FAMES trace of a DHA product produced by SMB.

Figure 16 shows a GC FAMES trace of a DHA product produced by distillation.

Detailed description of the invention

The chromatographic separation process of the invention is typically other than a chromatographic separation process for recovering a polyunsaturated fatty acid (PUFA) product, from a feed mixture, which process comprises introducing the feed mixture to a simulated or actual moving bed chromatography apparatus having a plurality of linked chromatography columns containing, as eluent, an aqueous alcohol, wherein the apparatus has a plurality of zones comprising at least a first zone and second zone, each zone having an extract stream and a raffinate stream from which liquid can be collected from said plurality of linked chromatography columns, and wherein (a) a raffinate stream containing the PUFA product together with more polar

components is collected from a column in the first zone and introduced to a nonadjacent column in the second zone, and/or (b) an extract stream containing the PUFA product together with less polar components is collected from a column in the second zone and introduced to a nonadjacent column in the first zone, said PUFA product being separated from different components of the feed mixture in each zone.

As used herein in this embodiment, the term "zone" refers to a plurality of linked chromatography columns containing, as eluent, an aqueous alcohol, and having one or more injection points for a feed mixture stream, one or more injection points for water and/or alcohol, a raffinate take-off stream from which liquid can be collected from said plurality of linked chromatography columns, and an extract take-off stream from which liquid can be collected from said plurality of linked chromatography columns. Typically, each zone has only one injection point for a feed mixture. In one embodiment, each zone has only one injection point for the aqueous alcohol eluent. In another embodiment, each zone has two or more injection points for water and/or alcohol.

Further details of this embodiment are to be found in international patent application no. PCT/GB10/002339, the entirety of which is incorporated herein by reference. The chromatographic separation process of the invention is typically other than the processes disclosed in PCT/GB10/002339.

As used herein, the term "PUFA product" refers to a product comprising one or more polyunsaturated fatty acids (PUFAs), and/or derivatives thereof, typically of nutritional or pharmaceutical significance. Typically, the PUFA product is a single PUFA or derivative thereof. Alternatively, the PUFA product is a mixture of two or more PUFAs or derivatives thereof, for example two.

The term "polyunsaturated fatty acid" (PUFA) refers to fatty acids that contain more than one double bond. Such PUFAs are well known to the person skilled in the art. As used herein, a PUFA derivative is a PUFA in the form of a mono-, di- or tri-glyceride, ester, phospholipid, amide, lactone, or salt. Triglycerides and esters are preferred. Esters are more preferred. Esters are typically alkyl esters, preferably C_1-

C_6 alkyl esters, more preferably C_1-C_4 alkyl esters. Examples of esters include methyl and ethyl esters. Ethyl esters are most preferred.

Typically, the PUFA product comprises at least one ω-3 or ω-6 PUFA, preferably at least one ω-3 PUFA. Examples of ω-3 PUFAs include alpha-linolenic acid (ALA), stearidonic acid (SDA), eicosatrienoic acid (ETE), eicosatetraenoic acid (ETA), eicosapentaenoic acid (EPA), docosapentaenoic acid (DPA) and docosahexaenoic acid (DHA). SDA, EPA, DPA and DHA are preferred. EPA and DHA are more preferred. Examples of ω-6 PUFAs include linoleic acid (LA), gamma-linolenic acid (GLA), eicosadienoic acid, dihomo-gamma-linolenic acid (DGLA), arachidonic acid (ARA), docosadienoic acid, adrenic acid and docosapentaenoic (ω-6) acid. LA, ARA, GLA and DGLA are preferred.

In one embodiment, the PUFA product is EPA and/or EPA ethyl ester (EE)

In another embodiment, the PUFA product is DHA and/or DHA ethyl ester (EE).

In a yet further embodiment, the PUFA product is a mixture of EPA and DHA and/or EPA EE and DHA EE.

In a most preferred embodiment, the PUFA product is EPA or EPA ethyl ester which is produced in greater than 90% purity, preferably greater than 95% purity, and more preferably greater than 97% purity.

Typically, in addition to said PUFA product, an additional secondary PUFA product is collected in the chromatographic separation process of the invention. Preferably, the PUFA product is EPA and the additional secondary PUFA product is DHA.

In a further embodiment of the invention, the apparatus is configured to collect a PUFA product which is a concentrated mixture of EPA and DHA. Thus, a feed mixture is used which contains EPA, DHA, components which are more polar than EPA and DHA, and components which are less polar than EPA and DHA. In the first separation step, less polar material than EPA and DHA is typically removed. In the

second separation step, material which is more polar than EPA and DHA is typically removed, and a concentrated mixture of EPA and DHA is collected as the PUFA product.

Suitable feed mixtures for fractionating by the process of the present invention may be obtained from natural sources including vegetable and animal oils and fats, and from synthetic sources including oils obtained from genetically modified plants, animals and micro organisms including yeasts. Examples include fish oils, algal and microalgal oils and plant oils, for example borage oil, Echium oil and evening primrose oil. In one embodiment, the feed mixture is a fish oil. In another embodiment, the feed mixture is an algal oil. Algal oils are particularly suitable when the desired PUFA product is EPA and/or DHA. Genetically modified Safflower oil is particularly suitable when the desired PUFA product is GLA. Genetically modified yeast is particularly suitable when the desired PUFA product is EPA.

In a particularly preferred embodiment the feed mixture is a fish oil or fish-oil derived feedstock. It has advantageously been found that when a fish-oil or fish-oil derived feed stock is used, an EPA or EPA ethyl ester PUFA product can be produced by the process of the present invention in greater than 90% purity, preferably greater than 95% purity, and more preferably greater than 97% purity.

The feed mixture may undergo chemical treatment before fractionation by the process of the invention. For example, it may undergo glyceride transesterification or glyceride hydrolysis followed in certain cases by selective processes such as crystallisation, molecular distillation, urea fractionation, extraction with silver nitrate or other metal salt solutions, iodolactonisation or supercritical fluid fractionation. Alternatively, a feed mixture may be used directly with no initial treatment step.

The feed mixtures typically contain the PUFA product and at least one more polar component and at least one less polar component. The less polar components have a stronger adherence to the adsorbent used in the process of the present invention than does the PUFA product. During operation, such less polar components typically move with the solid adsorbent phase in preference to the liquid eluent phase. The more polar components have a weaker adherence to the adsorbent used in the process

of the present invention than does the PUFA product. During operation, such more polar components typically move with the liquid eluent phase in preference to the solid adsorbent phase. In general, more polar components will be separated into a raffinate stream, and less polar components will be separated into an extract stream.

Examples of the more and less polar components include (1) other compounds occurring in natural oils (e.g. marine oils or vegetable oils), (2) byproducts formed during storage, refining and previous concentration steps and (3) contaminants from solvents or reagents which are utilized during previous concentration or purification steps.

Examples of (1) include other unwanted PUFAs; saturated fatty acids; sterols, for example cholesterol; vitamins; and environmental pollutants, such as polychlorobiphenyl (PCB), polyaromatic hydrocarbon (PAH) pesticides, chlorinated pesticides, dioxines and heavy metals. PCB, PAH, dioxines and chlorinated pesticides are all highly non-polar components.

Examples of (2) include isomers and oxidation or decomposition products from the PUFA product, for instance, auto-oxidation polymeric products of fatty acids or their derivatives.

Examples of (3) include urea which may be added to remove saturated or mono-unsaturated fatty acids from the feed mixture.

Preferably, the feed mixture is a PUFA-containing marine oil (e.g. a fish oil), more preferably a marine oil (e.g. a fish oil) comprising EPA and/or DHA.

A typical feed mixture for preparing concentrated EPA (EE) by the process of the present invention comprises 50-75% EPA (EE), 0 to 10% DHA (EE), and other components including other essential ω-3 and ω-6 fatty acids.

A preferred feed mixture for preparing concentrated EPA (EE) by the process of the present invention comprises 55% EPA (EE), 5% DHA (EE), and other components

including other essential ω-3 and ω-6 fatty acids. DHA (EE) is less polar than EPA(EE).

A typical feed mixture for preparing concentrated DHA (EE) by the process of the present invention comprises 50-75% DHA (EE), 0 to 10% EPA (EE), and other components including other essential ω-3 and ω-6 fatty acids.

A preferred feed mixture for preparing concentrated DHA (EE) by the process of the present invention comprises 75% DHA (EE), 7% EPA (EE) and other components including other essential ω-3 and ω-6 fatty acids. EPA (EE) is more polar than DHA (EE).

A typical feed mixture for preparing a concentrated mixture of EPA (EE) and DHA (EE) by the process of the present invention comprises greater than 33% EPA (EE), and greater than 22% DHA (EE).

Each separation step of the process of the present invention is carried out in a simulated or actual moving bed chromatography apparatus.

Any known simulated or actual moving bed chromatography apparatus may be utilised for the purposes of the method of the present invention, as long as the apparatus is used in accordance with the process of the present invention. Those apparatuses described in US 2,985,589, US 3,696,107, US 3,706,812, US 3,761,533, FR-A-2103302, FR-A-2651148, FR-A-2651149, US 6,979,402, US 5,069,883 and US 4,764,276 may all be used if configured in accordance with the process of the present invention.

As used herein, the term "simulated or actual moving bed chromatography apparatus" typically refers to a plurality of linked chromatography columns containing, as eluent, an aqueous organic solvent, and having one or more injection points for a feed mixture stream, one or more injection points for water and/or organic solvent, a raffinate take-off stream from which liquid can be collected from said plurality of

linked chromatography columns, and an extract take-off stream from which liquid can be collected from said plurality of linked chromatography columns.

The chromatography apparatus used in each step of the process of the present invention has a single array of chromatography columns linked in series containing, as eluent, an aqueous organic solvent. Typically, each of the chromatography columns are linked to the two columns in the apparatus adjacent to that column. Thus, the output from a given column in the array is connected to the input of the adjacent column in the array, which is downstream with respect to the flow of eluent in the array. Thus, eluent can flow around the array of linked chromatography columns. Typically, none of the chromatography columns are linked to non-adjacent columns in the apparatus.

As used herein the term "nonadjacent" refers to columns, in for example the same apparatus, separated by one or more columns, preferably 3 or more columns, more preferably 5 or more columns, most preferably about 5 columns.

Typically, each apparatus has only one injection point for a feed mixture. In one embodiment, each apparatus has only one injection point for the aqueous organic solvent eluent. In another embodiment, each apparatus has two or more injection points for water and/or organic solvent.

The term "raffinate" is well known to the person skilled in the art. In the context of actual and simulated moving bed chromatography it refers to the stream of components that move more rapidly with the liquid eluent phase compared with the solid adsorbent phase. Thus, a raffinate stream is typically enriched with more polar components, and depleted of less polar components compared with a feed stream.

The term "extract" is well known to the person skilled in the art. In the context of actual and simulated moving bed chromatography it refers to the stream of components that move more rapidly with the solid adsorbent phase compared with the liquid eluent phase. Thus, an extract stream is typically enriched with less polar components, and depleted of more polar components compared with a feed stream.

The number of columns used in each apparatus is not particularly limited. A skilled person would easily be able to determine an appropriate number of columns to use. The number of columns is typically 4 or more, preferably 6 or more, more preferably 8 or more, for example 4, 5, 6, 7, 8, 9, or 10 columns. In preferred embodiment, 5 or 6 columns, more preferably 6 columns. are used. In another preferred embodiment, 7 or 8 columns, more preferably 8 columns are used. Typically, there are no more than 25 columns, preferably no more than 20, more preferably no more than 15.

The chromatographic apparatuses used in the first and second separation steps typically contain the same number of columns. For certain applications they may have different numbers of columns.

The dimensions of the columns used in the apparatus are not particularly limited, and will depend on the volume of feed mixture to be purified. A skilled person would easily be able to determine appropriately sized columns to use. The diameter of each column is typically between 10 and 1000mm, preferably between 10 and 500mm, more preferably between 25 and 250mm, even more preferably between 50 and 100 mm, and most preferably between 70 and 80 mm. The length of each column is typically between 10 and 300 cm, preferably between 10 and 200 cm, more preferably between 25 and 150cm, even more preferably between 70 and 110 cm, and most preferably between 80 and 100 cm.

The columns in the chromatographic apparatuses used in the first and second separation steps typically have identical dimensions but may, for certain applications, have different dimensions.

The flow rates to the column are limited by maximum pressures across the series of columns and will depend on the column dimensions and particle size of the solid phases. One skilled in the art will easily be able to establish the required flow rate for each column dimension to ensure efficient desorption. Larger diameter columns will in general need higher flows to maintain linear flow through the columns.

For the typical column sizes outlined above, typically the flow rate of eluent into the chromatographic apparatus used in the first separation step is from 1 to 4.5L/min,

preferably from 1.5 to 2.5 L/min. Typically, the flow rate of the extract from the chromatographic apparatus used in the first separation step is from 0.1 to 2.5L/min, preferably from 0.5 to 2.25 L/min. In embodiments where part of the extract from the first separation step is recycled back into the apparatus used in the first separation step, the flow rate of recycle is typically from 0.7 to 1.4 L/min, preferably about 1 L/min. Typically, the flow rate of the raffinate from the chromatographic apparatus used in the first separation step is from 0.2 to 2.5 L/min, preferably from 0.3 to 2.0 L/min. In embodiments where part of the raffinate from the first separation step is recycled back into the apparatus used in the first separation step, the flow rate of recycle is typically from 0.3 to 1.0 L/min, preferably about 0.5 L/min. Typically, the flow rate of introduction of the feed mixture into the chromatographic apparatus used in the first separation step is from 5 to 150 mL/min, preferably from 10 to 100 mL/min, more preferably from 20 to 60 mL/min.

For the typical column sizes outlined above, typically the flow rate of eluent into the chromatographic apparatus used in the second separation step is from 1 to 4 L/min, preferably from 1.5 to 3.5 L/min. Typically, the flow rate of the extract from the chromatographic apparatus used in the second separation step is from from 0.5 to 2 L/min, preferably from 0.7 to 1.9 L/min. In embodiments where part of the extract from the second separation step is recycled back into the apparatus used in the second separation step, the flow rate of recycle is typically from 0.6 to 1.4 L/min, preferably from 0.7 to 1.1 L/min, more preferably about 0.9 L/min. Typically, the flow rate of the raffinate from the chromatographic apparatus used in the second separation step is from 0.5 to 2.5 L/min, preferably from 0.7 to 1.8 L/min, more preferably about 1.4 L/min. In embodiments where part of the raffinate from the second separation step is recycled back into the apparatus used in the second separation step, the flow rate of recycle is typically from 0.3 to 1.0 L/min, preferably about 0.5 L/min.

As the skilled person will appreciate, references to rates at which liquid is collected or removed via the various extract and raffinate streams refer to volumes of liquid removed in an amount of time, typically L/minute. Similarly, references to rates at which liquid is recycled back into an apparatus, typically to an adjacent column in the apparatus, refer to volumes of liquid recycled in an amount of time, typically L/minute.

The step time, i.e. the time between shifting the points of injection of the feed mixture and eluent, and the various take off points of the collected fractions, is not particularly limited, and will depend on the number and dimensions of the columns used, and the flow rate through the apparatus. A skilled person would easily be able to determine appropriate step times to use in the process of the present invention. The step time is typically from 100 to 1000 seconds, preferably from 200 to 800 seconds, more preferably from about 250 to about 750 seconds. In some embodiments, a step time of from 100 to 400 seconds, preferably 200 to 300 seconds, more preferably about 250 seconds, is appropriate. In other embodiments, a step time of from 600 to 900 seconds, preferably 700 to 800 seconds, more preferably about 750 seconds is appropriate.

In the process of the present invention, actual moving bed chromatography is preferred.

Conventional adsorbents known in the art for actual and simulated moving bed systems may be used in the process of the present invention. Each chromatographic column may contain the same or a different adsorbent. Typically, each column contains the same adsorbent. Examples of such commonly used materials are polymeric beads, preferably polystyrene reticulated with DVB (divinylbenzene); and silica gel, preferably reverse phase bonded silica gel with C8 or C18 alkanes, especially C18. C18 bonded reverse phase silica gel is preferred. The adsorbent used in the process of the present invention is preferably non-polar.

The shape of the adsorbent stationary phase material may be, for example, spherical or nonspherical beads, preferably substantially spherical beads. Such beads typically have a diameter of 5 to 500 microns, preferably 10 to 500 microns, more preferably 15 to 500 microns, more preferably 40 to 500 microns, more preferably 100 to 500 microns, more preferably 250 to 500 microns, even more preferably 250 to 400 microns, most preferably 250 to 350 microns. In some embodiments, beads with a diameter of 5 to 35 microns may be used, typically 10 to 30 microns, preferably 15 to 25 microns. Some preferred particle sizes are somewhat larger than particle sizes of beads used in the past in simulated and actual moving bed processes. Use of larger

particles enables a lower pressure of eluent to be used in the system. This, in turn, has advantages in terms of cost savings, efficiency and lifetime of the apparatus. It has surprisingly been found that adsorbent beads of large particle size may be used in the process of the present invention (with their associated advantages) without any loss in resolution.

The adsorbent typically has a pore size of from 10 to 50 nm, preferably 15 to 45 nm, more preferably 20 to 40 nm, most preferably 25 to 35 nm.

Typically, the process of the present invention is conducted at from 15 to 55°C, preferably at from 20 to 40°C, more preferably at about 30°C. Thus, the process is typically carried out at room temperature, but may be conducted at elevated temperatures.

The process of the present invention comprises a first and second separation step.

These two steps can easily be carried out on a single chromatographic apparatus. Thus, in one embodiment, (a) the first and second separation steps are carried out sequentially on the same chromatography apparatus, the intermediate product being recovered between the first and second separation steps and the process conditions in the chromatography apparatus being adjusted between the first and second separation steps such that the PUFA product is separated from different components of the feed mixture in each separation step. A preferred embodiment of this separation process is shown as Figure 10a. Thus, the first separation step (left hand side) is carried out on an SMB apparatus having 8 columns. Between the first and second separation steps the intermediate product is recovered in, for example, a container, the process conditions in the chromatography apparatus are adjusted such that the PUFA product is separated from different components of the feed mixture in each separation step. The second separation step (right hand side) is then carried out on the same SMB apparatus having 8 columns.

In embodiment (a), adjusting the process conditions typically refers to adjusting the process conditions in the apparatus as a whole, i.e. physically modifying the apparatus so that the conditions are different. It does not refer to simply reintroducing the

intermediate product back into a different part of the same apparatus where the process conditions might happen to be different.

Alternatively, first and second separate chromatographic apparatuses can be used in the first and second separation steps. Thus, in another embodiment, (b) the first and second separation steps are carried out on separate first and second chromatography apparatuses respectively, the intermediate product obtained from the first separation step being introduced into the second chromatography apparatus, and the PUFA product being separated from different components of the feed mixture in each separation step.

In embodiment (b), the two separation steps may either be carried out sequentially or simultaneously.

Thus, in embodiment (b) in the case where the two separation steps are carried out sequentially, the first and second separation steps are carried out sequentially on separate first and second chromatography apparatuses respectively, the intermediate product being recovered between the first and second separation steps and the process conditions in the first and second chromatography apparatuses being adjusted such that the PUFA product is separated from different components of the feed mixture in each separation step. A preferred embodiment of this separation process is shown as Figure 10b. Thus, the first separation step (left hand side) is carried out on an SMB apparatus having 8 columns, one to eight. Between the first and second separation steps the intermediate product is recovered, for example in a container, and then introduced into a second separate SMB apparatus. The second separation step (right hand side) is carried out on the second separate SMB apparatus which has 8 columns, nine to sixteen. The process conditions in the two chromatography apparatuses are adjusted such that the PUFA product is separated from different components of the feed mixture in each separation step.

In embodiment (b) in the case where the two separation steps are carried our simultaneously, the first and second separation steps are carried out on separate first and second chromatography apparatuses respectively, the intermediate product being introduced into the chromatography apparatus used in the second separation step, and

the process conditions in the first and second chromatography apparatuses being adjusted such that the PUFA product is separated from different components of the feed mixture in each separation step. A preferred embodiment of this separation process is shown as Figure 10c. Thus, the first separation step (left hand side) is carried out on an SMB apparatus having 8 columns, one to eight. The intermediate product obtained in the first separation step is then introduced into the second separate chromatography apparatus used in the second separation step. The intermediate product may be passed from the first separation step to the second separation step directly or indirectly, for example via a container. The second separation step (right hand side) is carried out on the second separate SMB apparatus which has 8 columns, nine to sixteen. The process conditions in the two chromatography apparatuses are adjusted such that the PUFA product is separated from different components of the feed mixture in each separation step.

In embodiment (b) in the case where the two separation steps are carried our simultaneously, eluent circulates separately in the two separate chromatographic apparatuses. Thus, eluent is not shared between the two separate chromatographic apparatuses other than what eluent may be present as solvent in the intermediate product which is purified in the second separation step, and which is introduced into the chromatographic apparatus used in the second separation step. Chromatographic columns are not shared between the two separate chromatographic apparatuses used in the first and second separation steps.

After the intermediate product is obtained in the first separation step, the aqueous organic solvent eluent may be partly or totally removed before the intermediate product is purified in the second separation step. Alternatively, the intermediate product may be purified in the second separation step without the removal of any solvent present.

As mentioned above, the PUFA product is separated from different components of the feed mixture in each separation step. In embodiment (a), the process conditions of the single SMB apparatus used in both separation steps are adjusted between the first and second separation steps such that the PUFA product is separated from different components of the feed mixture in each separation step. In embodiment (b), the

process conditions in the two separate chromatography apparatuses used in the first and second separation steps are set such that the PUFA product is separated from different components of the feed mixture in each separation step.

Thus, the process conditions in the first and second separation steps vary. The process conditions which vary may include, for example, the size of the columns used, the number of columns used, the packing used in the columns, the step time of the SMB apparatus, the temperature of the apparatus, or the eluent used in the separation steps.

The intermediate product obtained in the first separation step is typically enriched in the PUFA product compared to the feed mixture.

The intermediate product obtained in the first separation step is then introduced into the chromatographic apparatus used in the second separation step.

The intermediate product is typically collected as the raffinate or extract stream from the chromatographic apparatus used in the first separation process.

Typically, the intermediate product is collected as the raffinate stream in the first separation step, and the PUFA product is collected as the extract stream in the second separation step. Thus, the raffinate stream collected in the first separation step is used as the feed mixture in the second separation step. The raffinate stream collected in the first separation step typically contains the PUFA product together with more polar components.

Alternatively, the intermediate product is collected as the extract stream in the first separation step, and the PUFA product is collected as the raffinate stream in the second separation step. Thus, the extract stream collected in the first separation step is used as the feed mixture in the second separation step. The extract stream collected in the first separation step typically contains the PUFA product together with less polar components.

The PUFA product is separated from different components of the feed mixture in each separation step. Typically, the components separated in each separation step of the process of the present invention have different polarities.

Preferably, the PUFA product is separated from less polar components of the feed mixture in the first separation step, and the PUFA product is separated from more polar components of the feed mixture in the second separation step.

Typically, (a) part of the extract stream from the apparatus used in the first separation step is recycled back into the apparatus used in the first separation step; and/or
(b) part of the raffinate stream from the apparatus used in the first separation step is recycled back into the apparatus used in the first separation step; and/or
(c) part of the extract stream from the apparatus used in the second separation step is recycled back into the apparatus used in the second separation step; and/or
(d) part of the raffinate stream from the apparatus used in the second separation step is recycled back into the apparatus used in the second separation step.

Preferably, (a) part of the extract stream from the apparatus used in the first separation step is recycled back into the apparatus used in the first separation step; and
(b) part of the raffinate stream from the apparatus used in the first separation step is recycled back into the apparatus used in the first separation step; and
(c) part of the extract stream from the apparatus used in the second separation step is recycled back into the apparatus used in the second separation step; and
(d) part of the raffinate stream from the apparatus used in the second separation step is recycled back into the apparatus used in the second separation step.

This recycle involves feeding part of the extract or raffinate stream out of the chromatography apparatus used in the first or second separation step back into the apparatus used in that step, typically into an adjacent column. This adjacent column is the adjacent column which is downstream with respect to the flow of eluent in the system.

The rate at which liquid collected via the extract or raffinate stream in the first or second separation steps is recycled back into the chromatography apparatus used in

that step is the rate at which liquid collected via that stream is fed back into the apparatus used in that step, typically into an adjacent column, i.e. the downstream column with respect to the flow of eluent in the system.

This can be seen with reference to a preferred embodiment in Figure 9. The rate of recycle of extract in the first separation step is the rate at which extract collected from the bottom of column 2 of the chromatographic apparatus used in the first separation step is fed into the top of column 3 of the chromatographic apparatus used in the first separation step, i.e. the flow rate of liquid into the top of column 3 of the chromatographic apparatus used in the first separation step.

The rate of recycle of extract in the second separation step is the rate at which extract collected at the bottom of column 2 of the chromatographic apparatus used in the second separation step is fed into the top of column 3 of the chromatographic apparatus used in the second separation step, i.e. the flow rate of liquid into the top of column 3 of the chromatographic apparatus used in the second separation step.

Recycle of the extract and/or raffinate streams in the first and/or second separation steps is typically effected by feeding the liquid collected via that stream in that separation step into a container, and then pumping an amount of that liquid from the container back into the apparatus used in that separation step, typically into an adjacent column. In this case, the rate of recycle of liquid collected via a particular extract or raffinate stream in the first and/or second separation steps, typically back into an adjacent column, is the rate at which liquid is pumped out of the container back into the chromatography apparatus, typically into an adjacent column.

As the skilled person will appreciate, the amount of liquid being introduced into a chromatography apparatus via the eluent and feedstock streams is balanced with the amount of liquid removed from the apparatus, and recycled back into the apparatus.

Thus, with reference to Figure 9, for the extract stream, the flow rate of eluent (desorbent) into the chromatographic apparatus(es) used in the first and second separation steps (D) is equal to the rate at which liquid collected via the extract stream in that separation step accumulates in a container (E1 and E2) added to the rate at

which extract is recycled back into the chromatographic apparatus used in that particular separation step (D-E1 and D-E2).

For the raffinate stream from a separation step, the rate at which extract is recycled back into the chromatographic apparatus used in that particular separation step (D-E1 and D-E2) added to the rate at which feedstock is introduced into the chromatographic apparatus used in that particular separation step (F and R1) is equal to the rate at which liquid collected via the raffinate stream in that particular separation step accumulates in a container (R1 and R2) added to the rate at which raffinate is recycled back into the chromatographic apparatus used in that particular separation step (D+F-E1-R1 and D+R1-E2-R2).

The rate at which liquid collected from a particular extract or raffinate stream from a chromatography apparatus accumulates in a container can also be thought of as the net rate of removal of that extract or raffinate stream from that chromatography apparatus.

The eluent used in the process of the present invention is an aqueous organic solvent.

The aqueous organic solvent typically comprises water and one or more alcohols, ethers, esters, ketones or nitriles, or mixtures thereof.

Alcohol solvents are well known to the person skilled in the art. Alcohols are typically short chain alcohols. Alcohols typically are of formula ROH, wherein R is a straight or branched C_1-C_6 alkyl group. The C_1-C_6 alkyl group is preferably unsubstituted. Examples of alcohols include methanol, ethanol, n-propanol, i-propanol, n-butanol, i-butanol, s-butanol and t-butanol. Methanol and ethanol are preferred. Methanol is more preferred.

Ether solvents are well known to the person skilled in the art. Ethers are typically short chain ethers. Ethers typically are of formula R-O-R', wherein R and R' are the same or different and represent a straight or branched C_1-C_6 alkyl group. The C_1-C_6 alkyl group is preferably unsubstituted. Preferred ethers include diethylether, diisopropylether, and methyl t-butyl ether (MTBE).

Ester solvents are well known to the person skilled in the art. Esters are typically short chain esters. Esters typically are of formula R-(C=O)O-R', wherein R and R' are the same or different and represent a straight or branched C_1-C_6 alkyl group. Preferred esters include methylacetate and ethylacetate.

Ketone solvents are well known to the person skilled in the art. Ketones are typically short chain ketones. Ketones typically are of formula R-(C=O)-R', wherein R and R' are the same or different and represent a straight or branched C_1-C_6 alkyl group. The C_1-C_6 alkyl group is preferably unsubstituted. Preferred ketones include acetone, methylethylketone and methyl isobutyl ketone (MIBK).

Nitrile solvents are well known to the person skilled in the art. Nitriles are typically short chain nitriles. Nitriles typically are of formula R-CN, wherein R represents a straight or branched C_1-C_6 alkyl group. The C_1-C_6 alkyl group is preferably unsubstituted. Preferred nitriles include acetonitrile.

Typically, the aqueous organic solvent is aqueous alcohol or aqueous acetonitrile.

The aqueous organic solvent is preferably aqueous methanol or aqueous acetonitrile. Aqueous methanol is more preferred.

Typically, the eluent is not in a supercritical state. Typically, the eluent is a liquid.

Typically, the average water:organic solvent ratio, for example water:methanol ratio, of the eluent in the entire apparatus is from 0.1:99.9 to 9:91 parts by volume, preferably from 0.25:99.75 to 7:93 parts by volume, more preferably from 0.5:99.5 to 6:94 parts by volume.

When the aqueous organic solvent is aqueous acetonitrile, the eluent typically contains up to 30 wt% water, remainder acetonitrile. Preferably, the eluent contains from 5 to 25 wt% water, remainder acetonitrile. More preferably, the eluent contains from 10 to 20 wt% water, remainder acetonitrile. Even more preferably, the eluent contains from 15 to 25 wt% water, remainder acetonitrile.

Typically, the aqueous organic solvent eluent used in each separation step has a different water:organic solvent ratio. The water:organic solvent ratio used in each separation step is preferably adjusted such that the PUFA product can be separated from different components of the feed mixture in each separation step.

The eluting power of the eluent used in each of the separation steps is typically different. Preferably, the eluting power of the eluent used in the first separation step is greater than that of the eluent used in the second separation step. In practice this is achieved by varying the relative amounts of water and organic solvent used in each separation step.

Depending on the choice of organic solvent, they may be more powerful desorbers than water. Alternatively, they may be less powerful desorbers than water. Acetonitrile and alcohols, for example, are more powerful desorbers than water. Thus, when the aqueous organic solvent is aqueous alcohol or acetonitrile, the amount of alcohol or acetonitrile in the eluent used in the first separation step is typically greater than the amount of alcohol or acetonitrile in the eluent used in the second separation step.

Typically, the water:organic solvent ratio of the eluent in the first separation step is lower than the water:organic solvent ratio of the eluent in the second separation step. Thus, the eluent in the first separation step typically contains more organic solvent, preferably alcohol, more preferably methanol, than the eluent in the second separation step.

In embodiments where the aqueous organic solvent used in each separation step has a different water:organic solvent ratio, the water:organic solvent ratio of the eluent in the first separation step is typically from 0:100 to 5:95 parts by volume, preferably from 0.1:99.9 to 2.5:97.5 parts by volume, more preferably from 0.25:99.75 to 2:98 parts by volume, and most preferably from 0.5:99.5 to 1.5:98.5 parts by volume. In these embodiments, the water:organic solvent ratio of the eluent in the second separation step is typically from 2:98 to 8:92 parts by volume, preferably 3:97 to 7:93 parts by volume, more preferably from 4:96 to 6:94 parts by volume, and even more preferably from 4.5:95.5 to 5.5:94.5 parts by volume.

In a particularly preferred embodiment where the aqueous organic solvent used in each separation step has a different water organic solvent content, the water: organic solvent ratio of the eluent in the first separation step is from 0.5:99.5 to 1.5:98.5 parts by volume, and the water:organic solvent ratio of the eluent in the second separation step is from 4.5:95:5 to 5.5:94.5 parts by volume.

It will be appreciated that the ratios of water and organic solvent in each separation step referred to above are average ratios within the totality of the chromatographic apparatus.

Typically, the water:organic solvent ratio of the eluent in each separation step is controlled by introducing water and/or organic solvent into one or more columns in the chromatographic apparatuses used in the separation steps. Thus, for example, to achieve a lower water:organic solvent ratio in the first separations step than in the second separation step, water is typically introduced more slowly into the chromatographic apparatus used in the first separation step than in the second separation step.

In some embodiments, essentially pure organic solvent and essentially pure water may be introduced at different points in the chromatographic apparatus used in each separation step. The relative flow rates of these two streams will determine the overall solvent profile in the chromatographic apparatus. In other embodiments, different organic solvent/water mixtures may be introduced at different points in each chromatographic apparatus used in each separation step. That will involve introducing two or more different organic solvent/water mixtures into the chromatographic apparatus used in a particular separation step, each organic solvent/water mixture having a different organic solvent:water ratio. The relative flow rates and relative concentrations of the organic solvent/water mixtures in this embodiment will determine the overall solvent profile in the chromatographic apparatus used in that separation step.

In a particularly preferred embodiment, either (1) the intermediate product containing the PUFA product together with more polar components is collected as the raffinate

stream in the first separation step, and the PUFA product is collected as the extract stream in the second separation step; or

(2) the intermediate product containing the PUFA product together with less polar components is collected as the extract stream in the first separation step, and the PUFA product is collected as the raffinate stream in the second separation step.

Particularly preferred embodiment (1) is suitable for purifying EPA from a feed mixture.

This particularly preferred embodiment (1) is illustrated in Figure 2. A feed mixture F comprising the PUFA product (B) and more polar (C) and less polar (A) components is purified in the first separation step. In the first separation step, the less polar components (A) are removed as extract stream E1. The PUFA product (B) and more polar components (C) are collected as raffinate stream R1. Raffinate stream R1 is the intermediate product which is then purified in the second separation step. In the second separation step, the more polar components (C) are removed as raffinate stream R2. The PUFA product (B) is collected as extract stream E2.

This embodiment is illustrated in more detail in Figure 4. Figure 4 is identical to Figure 2, except that the points of introduction of the organic solvent desorbent (D) and water (W) into each chromatographic apparatus are shown. The organic solvent desorbent (D) and water (W) together make up the eluent. The (D) phase is typically essentially pure organic solvent, but may, in certain embodiments be an organic solvent/water mixture comprising mainly organic solvent. The (W) phase is typically essentially pure water, but may, in certain embodiments be an organic solvent/water mixture comprising mainly water, for example a 98%water/2% methanol mixture.

A further illustration of this particularly preferred embodiment is shown in Figure 6. Here there is no separate water injection point, and instead an aqueous organic solvent desorbent is injected at (D).

The separation into raffinate and extract stream can be aided by varying the desorbing power of the eluent within each chromatographic apparatus. This can be achieved by introducing the organic solvent (or organic solvent rich) component of the eluent and

the water (or water rich) component at different points in each chromatographic apparatus. Thus, typically, the organic solvent is introduced upstream of the extract take-off point and the water is introduced between the extract take-off point and the point of introduction of the feed into the chromatographic apparatus, relative to the flow of eluent in the system. This is shown in Figure 4.

Typical solvents for use in this most preferred embodiment are aqueous alcohols or aqueous acetonitrile, preferably aqueous methanol.

Typically, in this particularly preferred embodiment, the aqueous organic solvent eluent used in the first separation step contains more organic solvent than the eluent used in the second separation step, i.e. the water:organic solvent ratio in the first step is lower than the water:organic solvent ratio in the second step.

In this particularly preferred embodiment the first raffinate stream in the first separation step is typically removed downstream of the point of introduction of the feed mixture into the chromatographic apparatus used in the first separation step, with respect to the flow of eluent.

In this particularly preferred embodiment, the first extract stream in the first separation step is typically removed upstream of the point of introduction of the feed mixture into the chromatographic apparatus used in the first separation step, with respect to the flow of eluent.

In this particularly preferred embodiment, the second raffinate stream in the second separation step is typically removed downstream of the point of introduction of the intermediate product into the chromatographic apparatus used in the second separation step, with respect to the flow of eluent.

In this particularly preferred embodiment, the second extract stream in the second separation step is typically collected upstream of the point of introduction of the intermediate product into the chromatographic apparatus used in the second separation step, with respect to the flow of eluent.

Typically in this particularly preferred embodiment, the organic solvent or aqueous organic solvent is introduced into the chromatographic apparatus used in the first separation step upstream of the point of removal of the first extract stream, with respect to the flow of eluent.

Typically in this particularly preferred embodiment, when water is introduced into the chromatographic apparatus used in the first separation step, the water is introduced into the chromatographic apparatus used in the first separation step upstream of the point of introduction of the feed mixture but downstream of the point of removal of the first extract stream, with respect to the flow of eluent.

Typically in this particularly preferred embodiment, the organic solvent or aqueous organic solvent is introduced into the chromatographic apparatus used in the second separation step upstream of the point of removal of the second extract stream, with respect to the flow of eluent.

Typically in this particularly preferred embodiment, when water is introduced into the chromatographic apparatus used in the second separation step, the water is introduced into the chromatographic apparatus used in the second separation step upstream of the point of introduction of the intermediate product but downstream of the point of removal of the second extract stream, with respect to the flow of eluent.

Particularly preferred embodiment (2) is suitable for purifying DHA from a feed mixture.

Particularly preferred embodiment (2) is illustrated in Figure 3. A feed mixture F comprising the PUFA product (B) and more polar (C) and less polar (A) components is purified in the first separation step. In the first separation step, the more polar components (C) are removed as raffinate stream R1. The PUFA product (B) and less polar components (A) are collected as extract stream E1. Extract stream E1 is the intermediate product which is then purified in the second separation step. In the second separation step, the less polar components (A) are removed as extract stream E2. The PUFA product (B) is collected as raffinate stream R2.

This embodiment is illustrated in more detail in Figure 5. Figure 5 is identical to Figure 3, except that the points of introduction of the organic solvent desorbent (D) and water (W) into each chromatographic apparatus are shown. As above, the (D) phase is typically essentially pure organic solvent, but may, in certain embodiments be an organic solvent/water mixture comprising mainly organic solvent. The (W) phase is typically essentially pure water, but may, in certain embodiments be an organic solvent/water mixture comprising mainly water, for example a 98%water/2% methanol mixture.

A further illustration of this particularly preferred embodiment is shown in Figure 7. Here there is no separate water injection point, and instead an aqueous organic solvent desorbent is injected at (D).

Typical solvents for use in this most preferred embodiment are aqueous alcohols or aqueous acetonitrile, preferably aqueous methanol.

Typically in this embodiment, the aqueous organic solvent eluent used in the first separation step contains less organic solvent than the eluent used in the second separation step, i.e. the water:organic solvent ratio in the first separation step is higher than in the second separation step.

In this embodiment the first raffinate stream in the first separation step is typically removed downstream of the point of introduction of the feed mixture into the chromatographic apparatus used in the first separation step, with respect to the flow of eluent.

In this embodiment, the first extract stream in the first separation step is typically removed upstream of the point of introduction of the feed mixture into the chromatographic apparatus used in the first separation step, with respect to the flow of eluent.

In this embodiment, the second raffinate stream in the second separation step is typically removed downstream of the point of introduction of the intermediate product

into the chromatographic apparatus used in the second separation step, with respect to the flow of eluent.

In this embodiment, the second extract stream in the second separation step is typically collected upstream of the point of introduction of the intermediate product into the chromatographic apparatus used in the second separation step, with respect to the flow of eluent.

Typically in this embodiment, the organic solvent or aqueous organic solvent is introduced into the chromatographic apparatus used in the first separation step upstream of the point of removal of the first extract stream, with respect to the flow of eluent.

Typically in this embodiment, when water is introduced into the chromatographic apparatus used in the first separation step, the water is introduced into the chromatographic apparatus used in the first separation step upstream of the point of introduction of the feed mixture but downstream of the point of removal of the first extract stream, with respect to the flow of eluent.

Typically in this embodiment, the organic solvent or aqueous organic solvent is introduced into the chromatographic apparatus used in the second separation step upstream of the point of removal of the second extract stream, with respect to the flow of eluent.

Typically in this embodiment, when water is introduced into the chromatographic apparatus used in the second separation step, the water is introduced into the chromatographic apparatus used in the second separation step upstream of the point of introduction of the intermediate product but downstream of the point of removal of the second extract stream, with respect to the flow of eluent.

In a preferred embodiment of the invention, each of the simulated or actual moving bed chromatography apparatus used in the first and second separation steps consist of eight chromatographic columns. These are referred to as columns 1 to 8. In each apparatus the eight columns are arranged in series so that the bottom of column 1 is

linked to the top of column 2, the bottom of column 2 is linked to the top of column 3…etc…and the bottom of column 8 is linked to the top of column 1. These linkages may optionally be via a holding container, with a recycle stream into the next column. The flow of eluent through the system is from column 1 to column 2 to column 3 etc. The effective flow of adsorbent through the system is from column 8 to column 7 to column 6 etc.

A most preferred embodiment is illustrated in Figure 8. A feed mixture F comprising the PUFA product (B) and more polar (C) and less polar (A) components is introduced into the top of column 5 in the chromatographic apparatus used in the first separation step. Organic solvent desorbent is introduced into the top of column 1 of the chromatographic apparatus used in the first separation step. Water is introduced into the top of column 4 of the chromatographic apparatus used in the first separation step. In the first separation step, the less polar components (A) are removed as extract stream E1 from the bottom of column 2. The PUFA product (B) and more polar components (C) are removed as raffinate stream R1 from the bottom of column 7. Raffinate stream R1 is the intermediate product which is then purified in the second separation step, by being introduced into the chromatographic apparatus used in the second separation step at the top of column 5. Organic solvent desorbent is introduced into the top of column 1 in the chromatographic apparatus used in the second separation step. Water is introduced into the top of column 4 in the chromatographic apparatus used in the second separation step. In the second separation step, the more polar components (C) are removed as raffinate stream R2 at the bottom of column 7. The PUFA product (B) is collected as extract stream E2 at the bottom of column 2.

In this most preferred embodiment, organic solvent is typically introduced into the top of column 1 of the chromatographic apparatus used in the first separation step.

In this most preferred embodiment, water is typically introduced into the top of column 4 of the chromatographic apparatus used in the first separation step.

In this most preferred embodiment, organic solvent is typically introduced into the top of column 1 of the chromatographic apparatus used in the second separation step.

In this most preferred embodiment, organic solvent is typically introduced into the top of column 4 of the chromatographic apparatus used in the second separation step.

In this most preferred embodiment, the feed stream is typically introduced into the top of column 5 of the chromatographic apparatus used in the first separation step.

In this most preferred embodiment, a first raffinate stream is typically collected as the intermediate product from the bottom of column 7 of the chromatographic apparatus used in the first separation step. This intermediate product is then purified in the second separation step and is typically introduced into the top of column 5 of the chromatographic apparatus used in the second separation step. The first raffinate stream may optionally be collected in a container before being purified in the second separation step.

In this most preferred embodiment, a first extract stream is typically removed from the bottom of column 2 of the chromatographic apparatus used in the first separation step. The first extract stream may optionally be collected in a container and reintroduced into the top of column 3 of the chromatographic apparatus used in the first separation step.

In this most preferred embodiment, a second raffinate stream is typically removed from the bottom of column 7 of the chromatographic apparatus used in the second separation step.

In this most preferred embodiment, a second extract stream is typically collected from the bottom of column 2 of the chromatographic apparatus used in the second separation step. This second extract stream typically contains the purified PUFA product. The second extract stream may optionally be collected in a container and reintroduced into the top of column 3 of the chromatographic apparatus used in the second separation step.

In this most preferred embodiment, the eluent used is typically aqueous alcohol, preferably aqueous methanol. The water:alcohol ratio is typically from 0.5:99.5 to 6:94 parts by volume.

Typically, in this most preferred embodiment, the water:organic solvent ratio in the chromatographic apparatus used in the first separation step is lower than the water:organic solvent ratio in the chromatographic apparatus used in the second separation step. Thus, the eluent in the first separation step typically contains more organic solvent than the eluent used in the second separation step.

The water:organic solvent ratio in the first separation step is typically from 0.5:99.5 to 1.5:98.5 parts by volume. The water:organic solvent ratio in the second separation step is typically from 2:98 to 6:94 parts by volume.

Although the embodiment of Figure 8 is configured as shown in Figure 10a, the configurations shown in Figures 10b and 10c could also be used in this embodiment.

A further most preferred embodiment is illustrated in Figure 9. A feed mixture F comprising the PUFA product (B) and more polar (C) and less polar (A) components is introduced into the top of column 5 in the chromatographic apparatus used in the first separation step. Aqueous organic solvent desorbent is introduced into the top of column 1 in the chromatographic apparatus used in the first separation step. In the first separation step, the less polar components (A) are removed as extract stream E1 from the bottom of column 2. The PUFA product (B) and more polar components (C) are removed as raffinate stream R1 from the bottom of column 7. Raffinate stream R1 is the intermediate product which is purified in the second separation step by being introduced into the top of column 4 of the chromatographic apparatus used in the second separation step. Aqueous organic solvent desorbent is introduced into the top of column 1 in the chromatographic apparatus used in the second separation step. In the second separation step, the more polar components (C) are removed as raffinate stream R2 at the bottom of column 7. The PUFA product (B) is collected as extract stream E2 at the bottom of column 2.

In this most preferred embodiment, aqueous organic solvent is typically introduced into the top of column 1 in the chromatographic apparatus used in the first separation step.

In this most preferred embodiment, aqueous organic solvent is typically introduced into the top of column 9 in the chromatographic apparatus used in the second separation step.

In this most preferred embodiment, the feed stream is typically introduced into the top of column 5 in the chromatographic apparatus used in the first separation step.

In this most preferred embodiment, a first raffinate stream is typically collected as the intermediate product from the bottom of column 7 of the chromatographic apparatus used in the first separation step. This intermediate product is then purified in the second separation step and is typically introduced into the top of column 5 of the chromatographic apparatus used in the second separation step. The first raffinate stream may optionally be collected in a container before being purified in the second separation step.

In this most preferred embodiment, a first extract stream is typically removed from the bottom of column 2 of the chromatographic apparatus used in the first separation step. The first extract stream may optionally be collected in a container and a portion reintroduced into the top of column 3 of the chromatographic apparatus used in the first separation step. The rate of recycle of liquid collected via the extract stream in the first separation step back into the chromatographic apparatus used in the first separation step is the rate at which liquid is pumped from this container into the top of column 3.

In this most preferred embodiment, a second raffinate stream is typically removed from the bottom of column 7 of the chromatographic apparatus used in the first separation step.

In this most preferred embodiment, a second extract stream is typically collected from the bottom of column 2 of the chromatographic apparatus used in the first separation

step. This second extract stream typically contains the purified PUFA product. The second extract stream may optionally be collected in a container and a portion reintroduced into the top of column 3 of the chromatographic apparatus used in the first separation step. The rate of recycle of liquid collected via the extract stream from the second separation step back into the chromatographic apparatus used in the second separation step is the rate at which liquid is pumped from this container into the top of column 3.

In this most preferred embodiment, the eluent used is typically aqueous alcohol, preferably aqueous methanol. The water:alcohol ratio is typically from 0.5:99.5 to 6:94 parts by volume.

Typically, in this most preferred embodiment, the water:organic solvent ratio in the chromatographic apparatus used in the first separation step is lower than the water:organic solvent ratio in the chromatographic apparatus used in the second separation step. Thus, the eluent used in the first separation step typically contains more organic solvent than the eluent used in the second separation step.

The water:organic solvent ratio in the first separation step is typically from 0.5:99.5 to 1.5:98.5 parts by volume. The water:organic solvent ratio in the second separation step is typically from 2:98 to 6:94 parts by volume.

Although the embodiment of Figure 9 is configured as shown in Figure 10a, the configurations shown in Figures 10b and 10c could also be used in this embodiment.

The process of the invention allows much higher purities of PUFA product to be achieved than have been possible with conventional chromatographic techniques. PUFA products produced by the process of the invention also have particularly advantageous impurity profiles, which are quite different from those observed in oils prepared by known techniques. The present invention therefore also relates to compositions comprising a PUFA product, for example one obtainable by the process of the present invention.

In practice, the process of the present invention will generally be controlled by a computer. The present invention therefore also provides a computer program for controlling a chromatographic apparatus as defined herein, the computer program containing code means that when executed instruct the apparatus to carry out the process of the invention.

The following Examples illustrate the invention.

EXAMPLES

Example 1

A fish oil derived feedstock (55weight% EPA EE, 5 weight% DHA EE) is fractionated using an actual moving bed chromatography system using bonded C18 silica gel (particle size 5μm) as stationary phase and aqueous methanol as eluent according to the system schematically illustrated in Figure 9. 8 columns (diameter: 4.6mm, length 250mm) are connected in series as shown in Figure 9.

The feed mixture was passed through the SMB apparatus in a first separation step. In the first separation step, process conditions were adjusted to purify EPA from DHA and other slow running impurities. EPA along with other fast running impurities was collected in the raffinate stream as the intermediate product. The extract stream containing DHA and other slow running impurities was rejected.

The process conditions of the SMB apparatus were then adjusted for the second separation step. In the second separation step, the process conditions were adjusted to purify EPA from the faster running impurities. The aqueous methanol eluent used in the second separation step had a higher water:organic solvent ratio than the aqueous methanol eluent used in the first separation step. The intermediate product was introduced into the SMB apparatus as the feed mixture in the second separation step. High purity EPA was collected as the extract stream. The raffinate stream containing fast running impurities was rejected.

EPA was produced with a final purity of ~95% and recovery ~95%.

An HPLC analysis of the feedstock is shown as Figure 11.

HPLC analyses of the raffinate (R) and extract (E) streams from the first separation step are shown as Figure 12.

HPLC analyses of the raffinate (R) and extract (E) streams from the second separation step are shown as Figure 13. A more detailed HPLC analysis of the extract stream from the second separation step is shown as Figure 14.

Figures 12 and 13 also show the process conditions for the first and second separation steps.

Reference Example 1

An experiment was carried out to compare the amount of environmental pollutants present in two PUFA products produced by SMB with similar oils prepared by distillation. The pollutant profiles of the oils are shown in Table 1 below.

Table 1

Parameter	Release Specification	Distilled oil [1]	Distilled oil [2]	PUFA product produced by SMB [1]	PUFA product produced by SMB [2]
Polyaromatic Hydrocarbons (PAH) (µg/kg)					
Benzo(a)pyrene	NMT 2.0	0.90	0.90	<0.05	<0.05
Impurities					
Dioxins and Furans PCDDs and PCDFs[1)] *(pg WHO-PCDD/F-TEQ/g)*	NMT 2.0	0.46	0.37	0.2	0.184
PCBs *(mg/kg)*	NMT 0.09	0.0037	0.0103	0.0007	0.0012
Sum of Dioxins, Furans and Dioxin-like PCBs[2)] *(pg WHO- PCDD/F-PCB-TEQ/g)*	NMT 10.0	1.03	0.466	0.30	0.298

1) Dioxin limits include the sum of polychlorinated dibenzeno-para-dioxins (PCDDs) and polychlorinated dibenzofurans (PCDFs) and expressed in World Health Organisation (WHO) toxic equivalents using WHO-toxic equivalent factors (TEFs). This means that analytical results relating to 17 individual dioxin congeners of toxicological concern are expressed in a single quantifiable unit: TCDD toxic equivalent concentration or TEQ

2) Maximum for dioxin and Furans remains at 2pg/g

Reference Example 2

An experiment was carried out to determine the amount of isomeric impurities present in an oil prepared by SMB compared with an equivalent oil prepared by distillation.

A GC trace of the DHA-rich oil prepared by SMB is shown as Figure 15. There is no evidence of isomeric impurities in the GC trace.

A GC trace of the oil prepared by distillation is shown as Figure 16. The four peaks with longer elution times than the DHA peak correspond to DHA isomers. From the GC trace it can be seen that the oil prepared by distillation contains about 1.5 wt% of isomeric impurities.

Reference Example 3

Two EPA-rich products produced by SMB were compared with EPA-rich oils produced by distillation. The wt% analysis of their component PUFAs is shown below.

Fatty Acid	PUFA product producedby SMB [1]	PUFA product produced by SMB [2]	Distilled oil [1]	Distilled oil [2]
EPA (C20:5n-3)	98.33	97.04	98.09	98.14
DHA (C22:6n-3)	0.15	<LOD	0.34	< LOD
C18:3 n-3	< LOD	0.28	0.24	< LOD
C18:4 n-3	0.33	0.20	0.14	0.26
C20:4 n-3	0.14	0.45	0.18	0.46
C21:5 n-3	< LOD	< LOD	< LOD	< LOD
C22:5 n-3	0.32	<LOD	< LOD	< LOD
Total Omega-3	99.27	97.97	98.94	98.86
C18:3n-6	< LOD	< LOD	0.05	< LOD
C20:3 n-6	< LOD	< LOD	0.13	0.11
C20:4 n-6	< LOD	0.21	0.26	0.37
Total Omega-6	< LOD	0.21	0.44	0.48

Reference Example 4

An EPA/DHA-rich product produced by SMB was compared with an EPA/DHA-rich oil produced by distillation. The wt% analysis of their component PUFAs is shown below.

Fatty Acid	Maxomega Ethyl Ester (Omega-3 90 ethyl esters) Area %	Distilled Ethyl Ester (Omega-3 90 ethyl esters[1]) Area %
EPA (C20:5n-3)	53.3	46.6
DHA (C22:6n-3)	32.9	38.2
TOTAL EPA + DHA	86.2	84.8
C18:3 n-3	0.3	0.1
C18:4 n-3	1.2	2.0
C20:4 n-3	1.8	0.6
C21:5 n-3	2.7	1.8
C22:5 n-3	5.0	3.8
Total Omega-3	97.2	93.1
C18:2 n-6	0.2	0.1
C18:3n-6	<0.1	0.2
C20:3 n-6	<0.1	0.1
C20:4 n-6	2.0	2.6
C22:4 n-6	<0.1	0.1
C22:5 n-6	0.6	1.0
Total Omega-6	2.8	4.1

CLAIMS

1. A chromatographic separation process for recovering a polyunsaturated fatty acid (PUFA) product from a feed mixture, which process comprises the steps of:
(i) purifying the feed mixture in a first separation step in a simulated or actual moving bed chromatography apparatus having a plurality of linked chromatography columns containing, as eluent, an aqueous organic solvent, to obtain an intermediate product; and
(ii) purifying the intermediate product obtained in (i) in a second separation step using a simulated or actual moving bed chromatography apparatus having a plurality of linked chromatography columns containing, as eluent, an aqueous organic solvent, to obtain the PUFA product; wherein
(a) the first and second separation steps are carried out sequentially on the same chromatography apparatus, the intermediate product being recovered between the first and second separation steps and the process conditions in the chromatography apparatus being adjusted between the first and second separation steps such that the PUFA product is separated from different components of the feed mixture in each separation step; or
(b) the first and second separation steps are carried out on separate first and second chromatography apparatuses respectively, the intermediate product obtained from the first separation step being introduced into the second chromatography apparatus, and the PUFA product being separated from different components of the feed mixture in each separation step.

2. A process according to claim 1, wherein each apparatus has an extract stream and a raffinate stream from which liquid can be collected from said plurality of linked chromatography columns.

3. A process according to claim 1 or 2, wherein the intermediate product obtained in the first separation step is enriched in the PUFA product compared to the feed mixture.

4. A process according to any one of the previous claims, wherein (a) the intermediate product is collected as the raffinate stream in the first separation step, and the PUFA product is collected as the extract stream in the second separation step; or
(b) the intermediate product is collected as the extract stream in the first separation step, and the PUFA product is collected as the raffinate stream in the second separation step.

5. A process according to any one of the previous claims, wherein the PUFA product is separated from less polar components of the feed mixture in the first separation step, and the PUFA product is separated from more polar components of the feed mixture in the second separation step.

6. A process according to any one of the preceding claims, wherein the PUFA product comprises at least one ω-3 PUFA.

7. A process according to claim 6, wherein the PUFA product comprises EPA and/or DHA.

8. A process according to any one of the preceding claims, wherein the eluent is a mixture of water and an alcohol, an ether, an ester, a ketone or a nitrile.

9. A process according to claim 8, wherein the eluent is a mixture of water and methanol.

10. A process according to any one of the preceding claims, wherein the feed mixture is a fish oil or fish-oil derived feedstock, the PUFA product is EPA or EPA ethyl ester, and the PUFA product is produced in a purity greater than 90% purity, preferably greater than 95% purity, and more preferably greater than 97% purity.

11. A process according to any one of the preceding claims, wherein (a) part of the extract stream from the apparatus used in the first separation step is recycled back into the apparatus used in the first separation step; and/or
(b) part of the raffinate stream from the apparatus used in the first separation step is recycled back into the apparatus used in the first separation step; and/or
(c) part of the extract stream from the apparatus used in the second separation step is recycled back into the apparatus used in the second separation step; and/or
(d) part of the raffinate stream from the apparatus used in the second separation step is recycled back into the apparatus used in the second separation step.

12. A process according to any one of the previous claims, wherein the aqueous organic solvent eluent used in each separation step has a different water:organic solvent ratio.

13. A process according to any one of the previous claims, wherein the water:organic solvent ratio used in each separation step is adjusted such that the PUFA product can be separated from different components of the feed mixture in each separation step.

14. A process according to any one of the previous claims, wherein the water:organic solvent ratio of the eluent in the first separation step is lower than the water:organic solvent ratio of the eluent in the second separation step.

15. A process according to any one of the previous claims, wherein the water: organic solvent ratio of the eluent in the first separation step is from 0.5:99.5 to 1.5:98.5 parts by volume, and the water:organic solvent ratio of the eluent in the second separation step is from 4.5:95:5 to 5.5:94.5 parts by volume.

16. A process according to any one of the previous claims, wherein the water:organic solvent ratio of the eluent in the first and second separation steps is controlled by introducing water and/or organic solvent into one or more columns in the apparatuses used in the first and second separation steps.

17. A computer program for controlling a chromatography apparatus as defined in any one of the preceding claims, which computer program contains code means that, when executed, instructs the apparatus to carry out a process according to any one of the preceding claims.

Figure 1

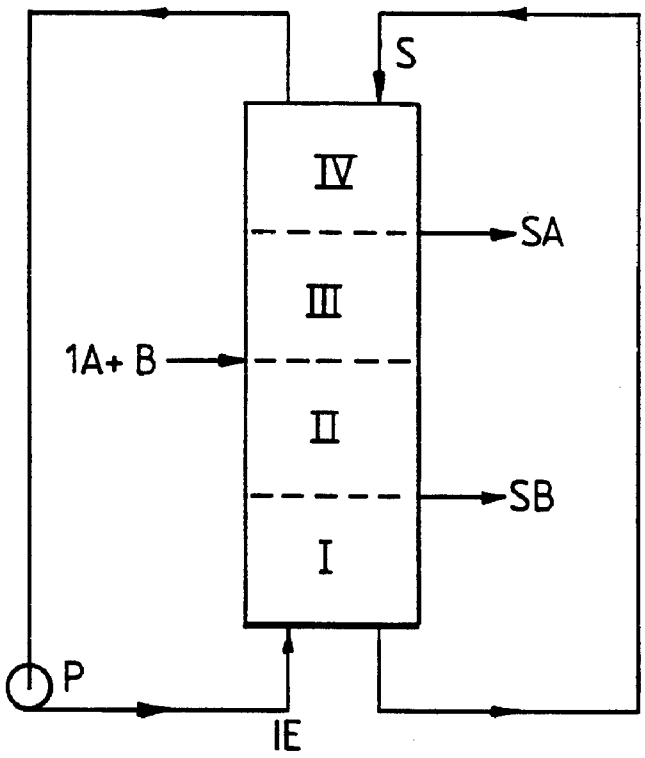

Figure 2

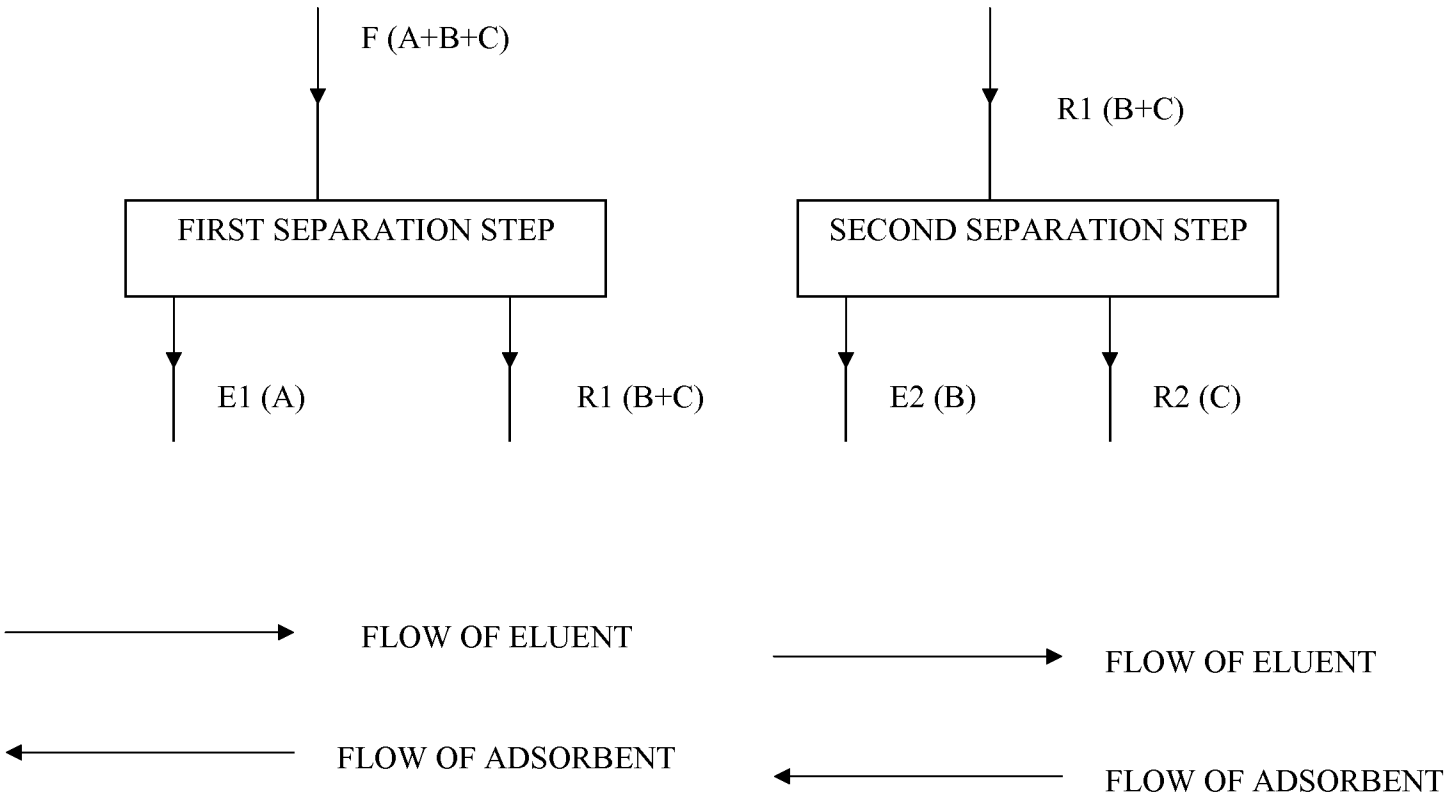
F (A+B+C)
FIRST SEPARATION STEP
E1 (A)
R1 (B+C)
R1 (B+C)
SECOND SEPARATION STEP
E2 (B)
R2 (C)
FLOW OF ELUENT
FLOW OF ADSORBENT
FLOW OF ELUENT
FLOW OF ADSORBENT

Figure 3

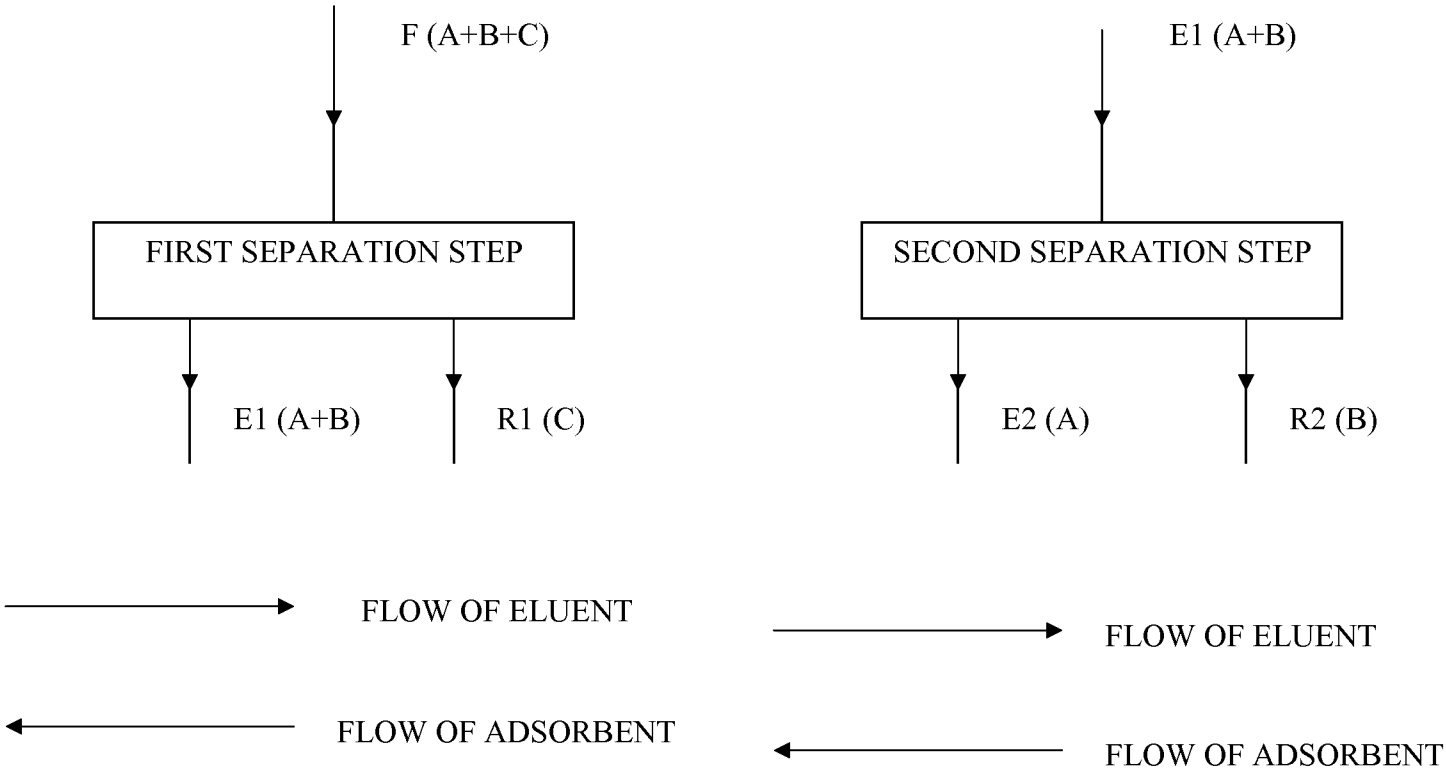
F (A+B+C)
FIRST SEPARATION STEP
E1 (A+B)
R1 (C)
E1 (A+B)
SECOND SEPARATION STEP
E2 (A)
R2 (B)
FLOW OF ELUENT
FLOW OF ADSORBENT
FLOW OF ELUENT
FLOW OF ADSORBENT

Figure 4

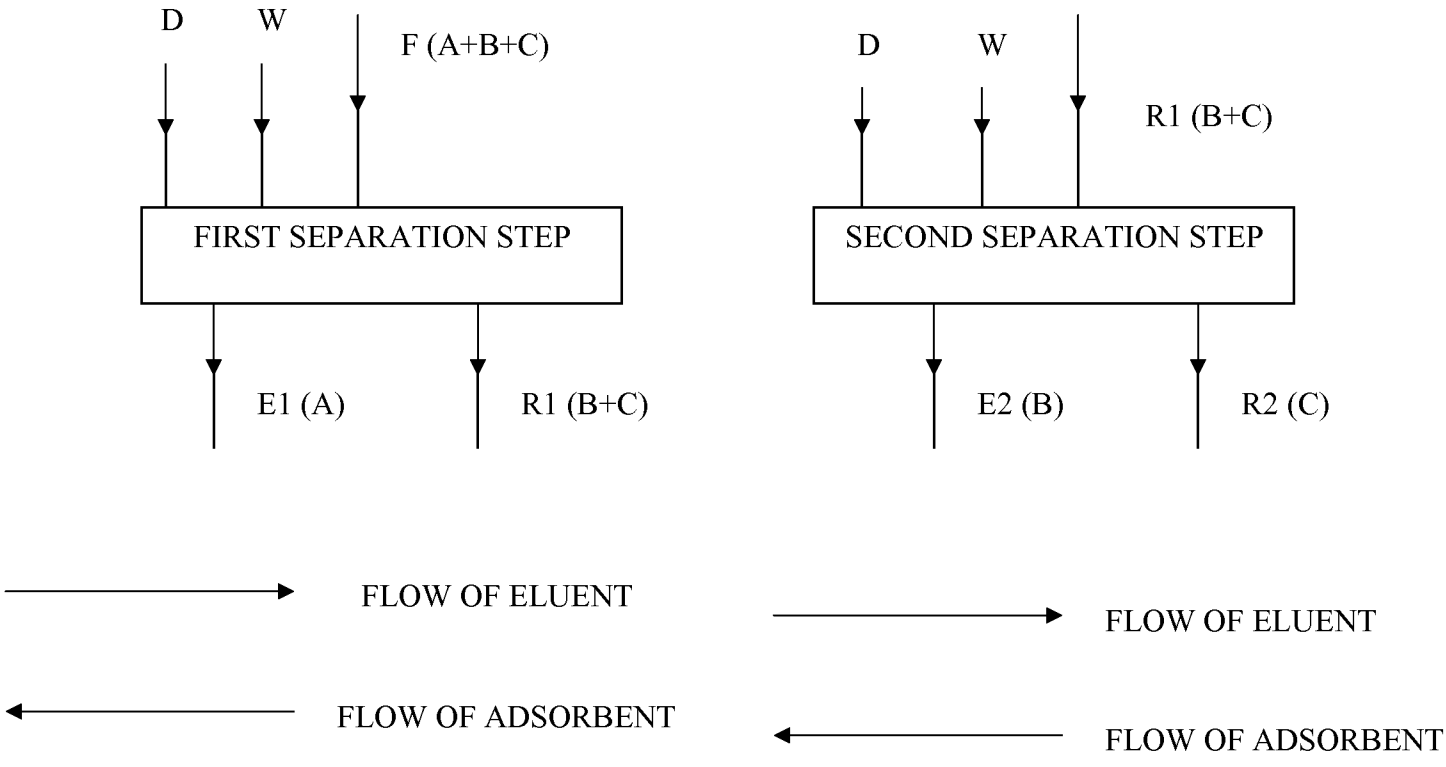
D
W
F (A+B+C)
FIRST SEPARATION STEP
E1 (A)
R1 (B+C)
D
W
R1 (B+C)
SECOND SEPARATION STEP
E2 (B)
R2 (C)
FLOW OF ELUENT
FLOW OF ADSORBENT
FLOW OF ELUENT
FLOW OF ADSORBENT

Figure 5

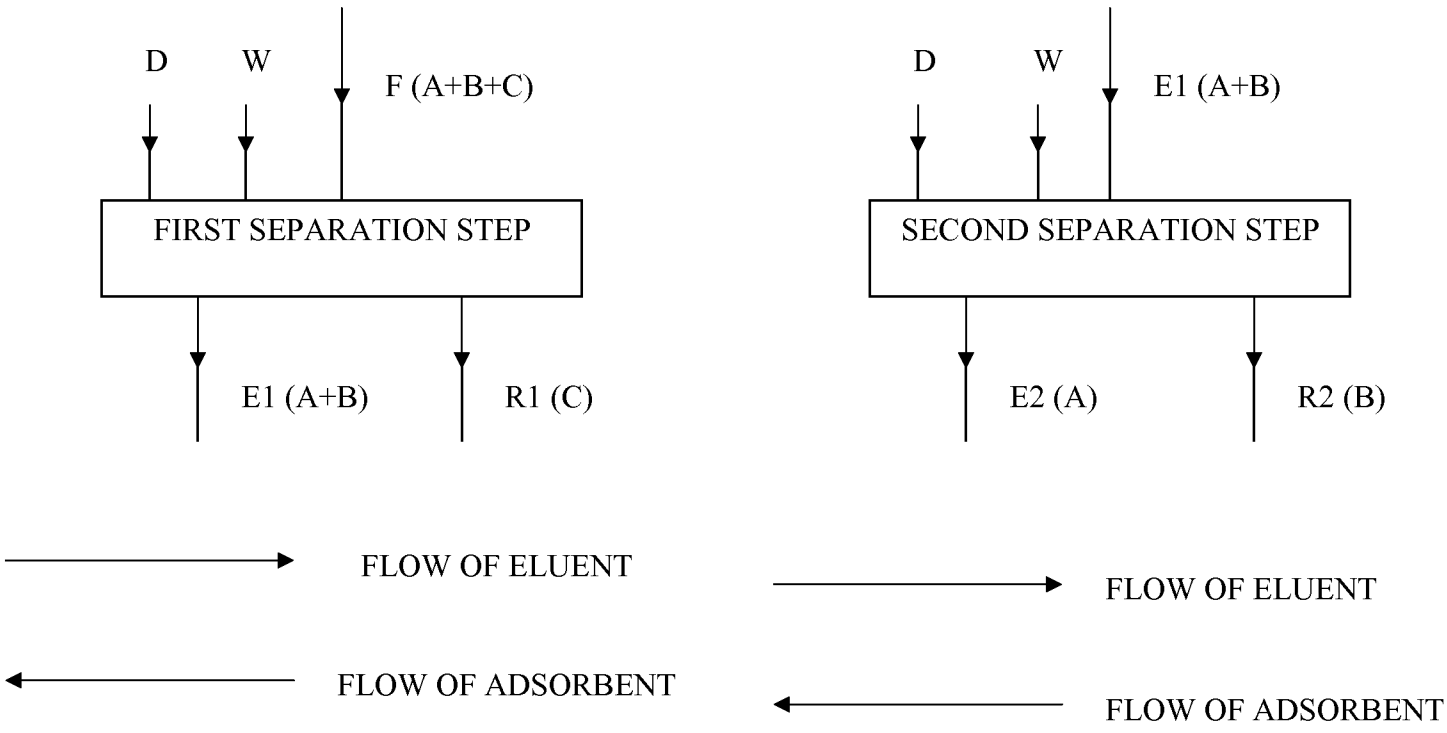
D
W
F (A+B+C)
FIRST SEPARATION STEP
E1 (A+B)
R1 (C)
D
W
E1 (A+B)
SECOND SEPARATION STEP
E2 (A)
R2 (B)
FLOW OF ELUENT
FLOW OF ADSORBENT
FLOW OF ELUENT
FLOW OF ADSORBENT

Figure 6

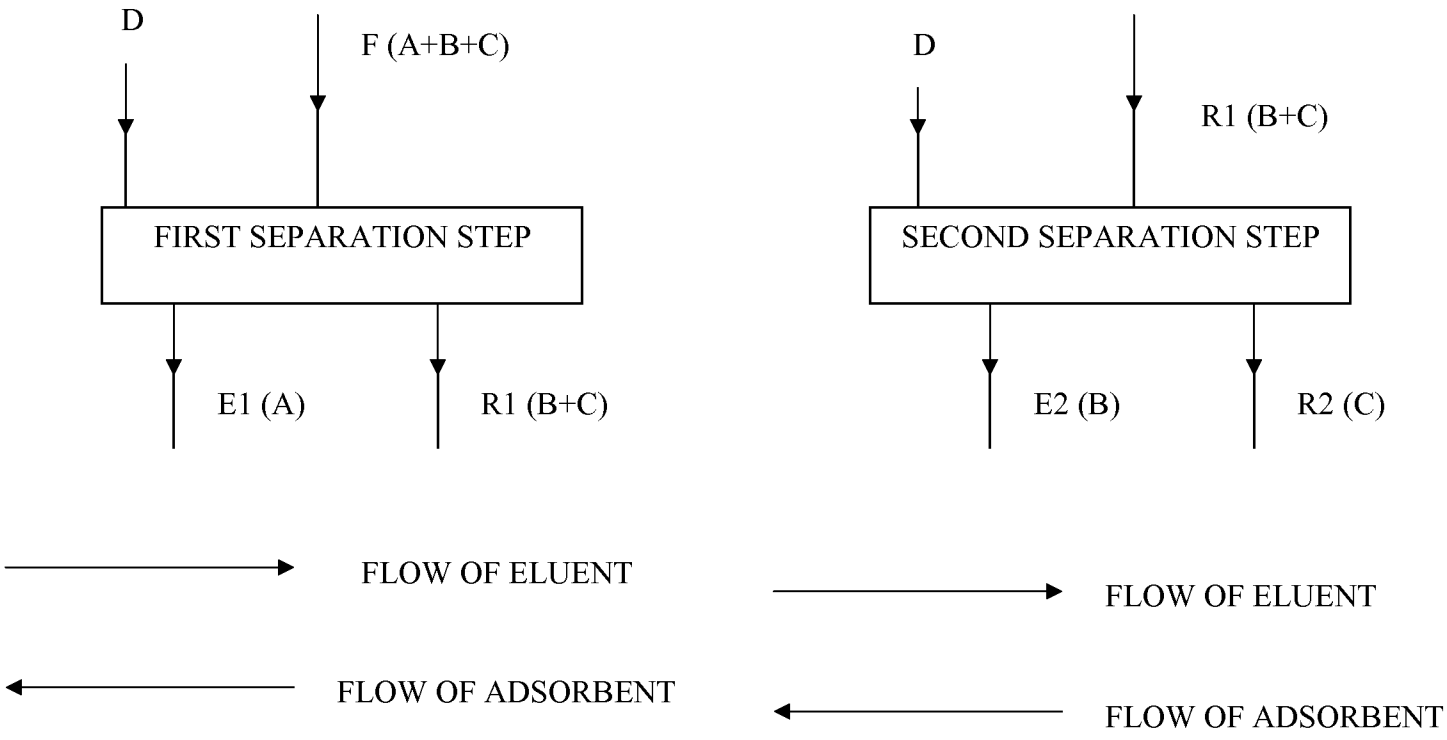
D
F (A+B+C)
FIRST SEPARATION STEP
E1 (A)
R1 (B+C)
D
R1 (B+C)
SECOND SEPARATION STEP
E2 (B)
R2 (C)
FLOW OF ELUENT
FLOW OF ADSORBENT
FLOW OF ELUENT
FLOW OF ADSORBENT

Figure 7

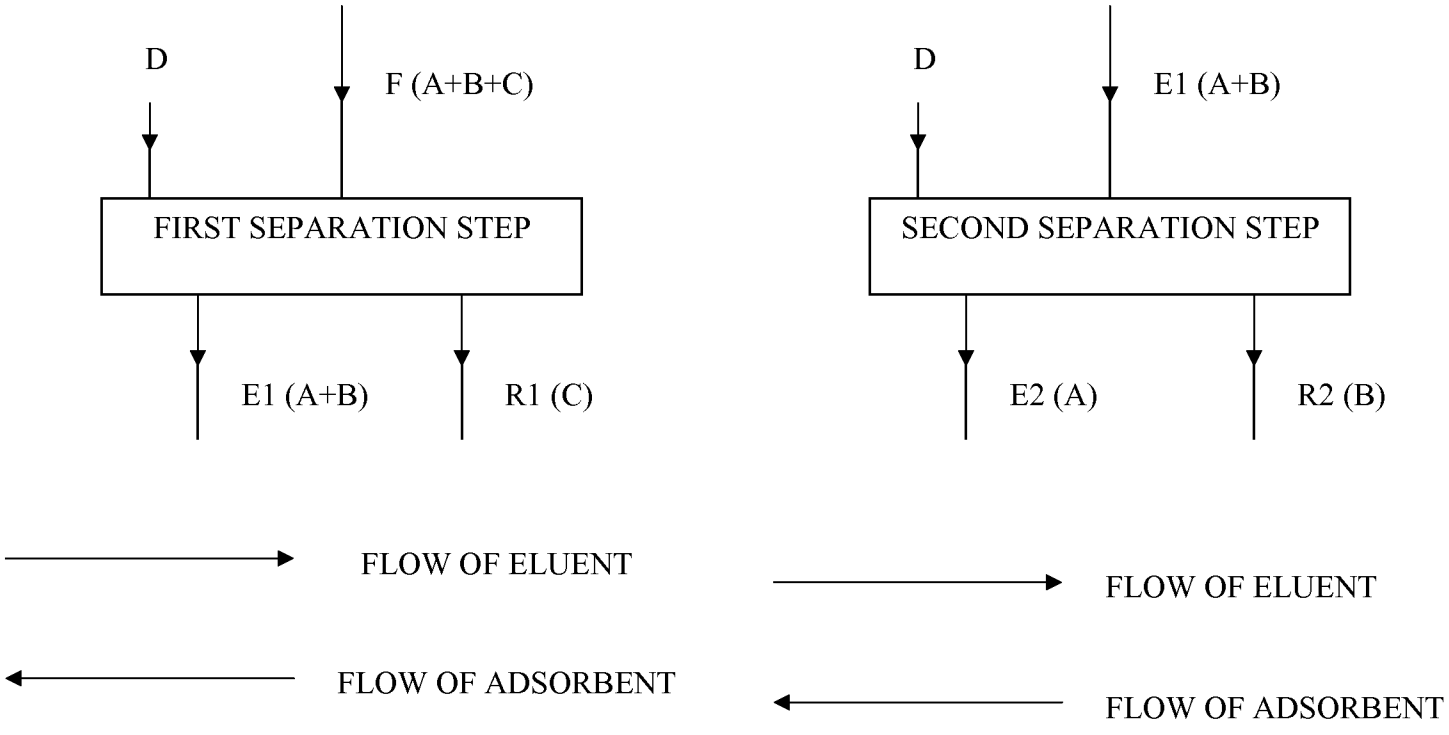
D
F (A+B+C)
FIRST SEPARATION STEP
E1 (A+B)
R1 (C)
D
E1 (A+B)
SECOND SEPARATION STEP
E2 (A)
R2 (B)
FLOW OF ELUENT
FLOW OF ADSORBENT
FLOW OF ELUENT
FLOW OF ADSORBENT

Figure 8

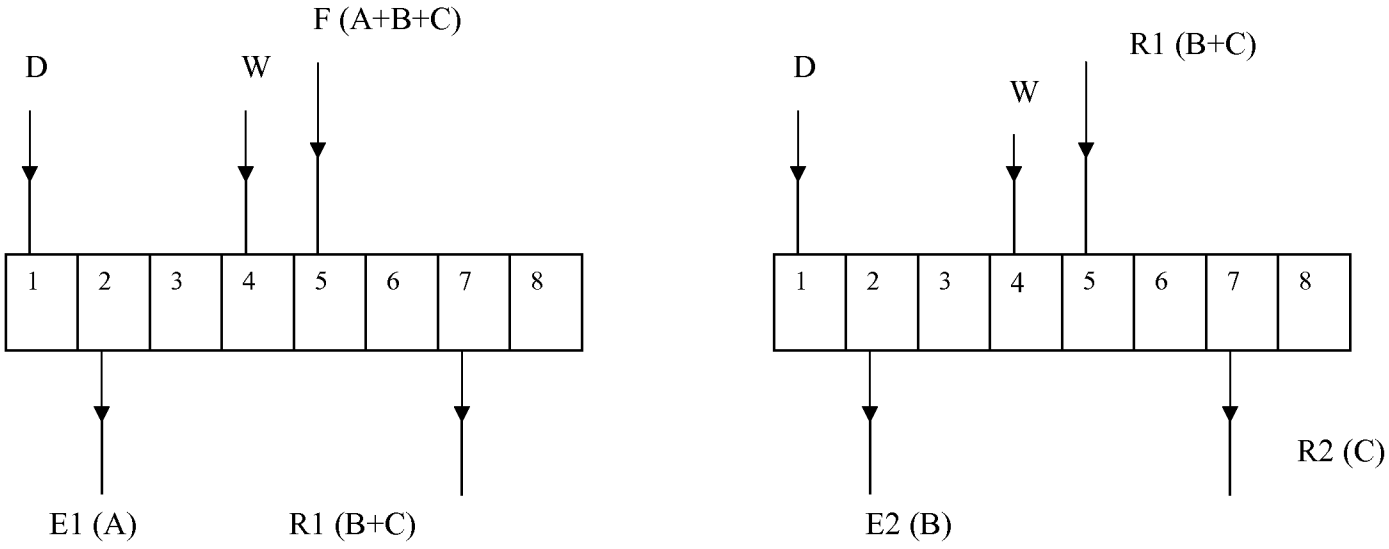

FIRST SEPARATION STEP

SECOND SEPARATION STEP

FLOW OF ELUENT

FLOW OF ADSORBENT

FLOW OF ELUENT

FLOW OF ADSORBENT

Figure 9

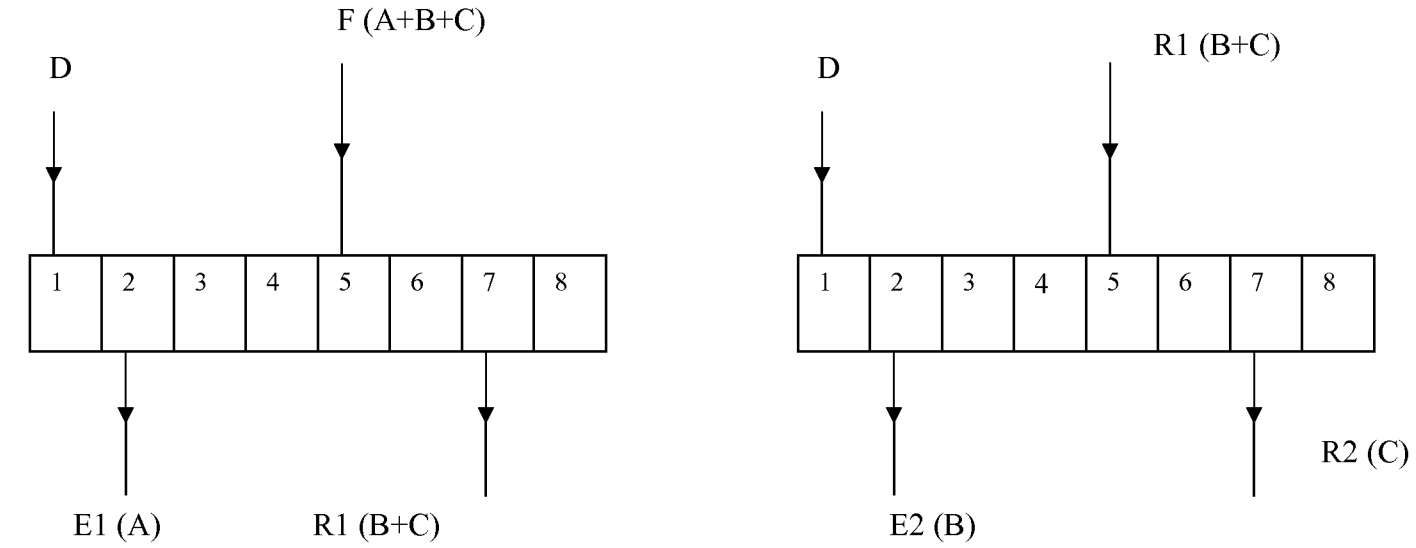

FIRST SEPARATION STEP

SECOND SEPARATION STEP

FLOW OF ELUENT

FLOW OF ADSORBENT

FLOW OF ELUENT

FLOW OF ADSORBENT

Figure 10

10A

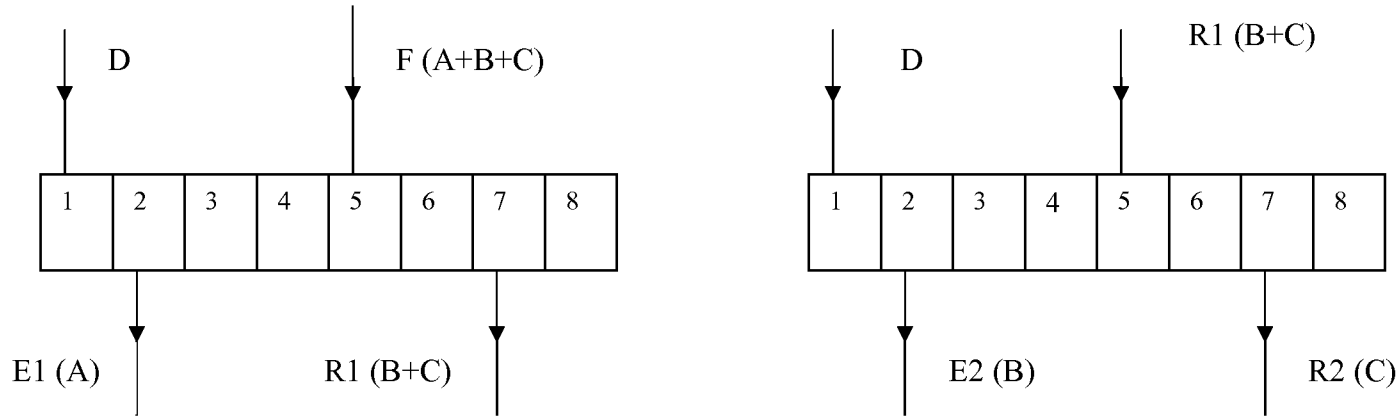

10B

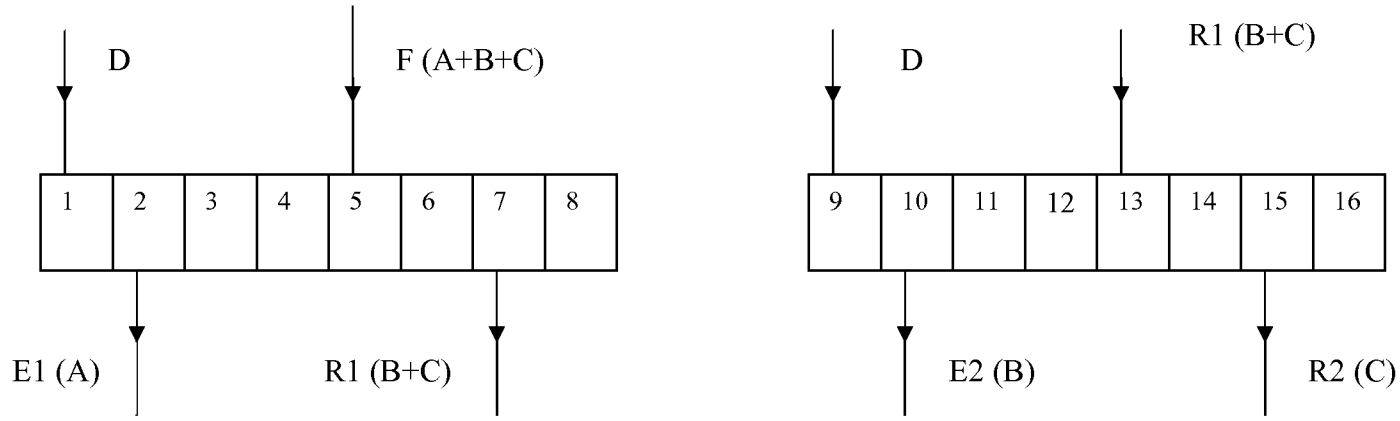

10C

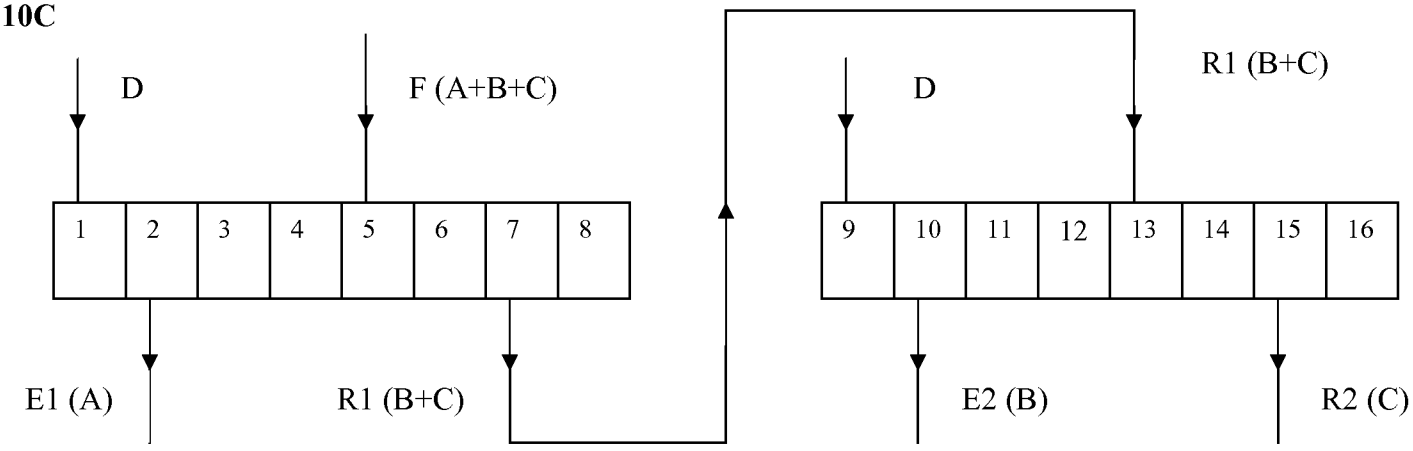

FIRST SEPARATION STEP

SECOND SEPARATION STEP

FLOW OF ELUENT

FLOW OF ADSORBENT

FLOW OF ELUENT

FLOW OF ADSORBENT

Figure 11

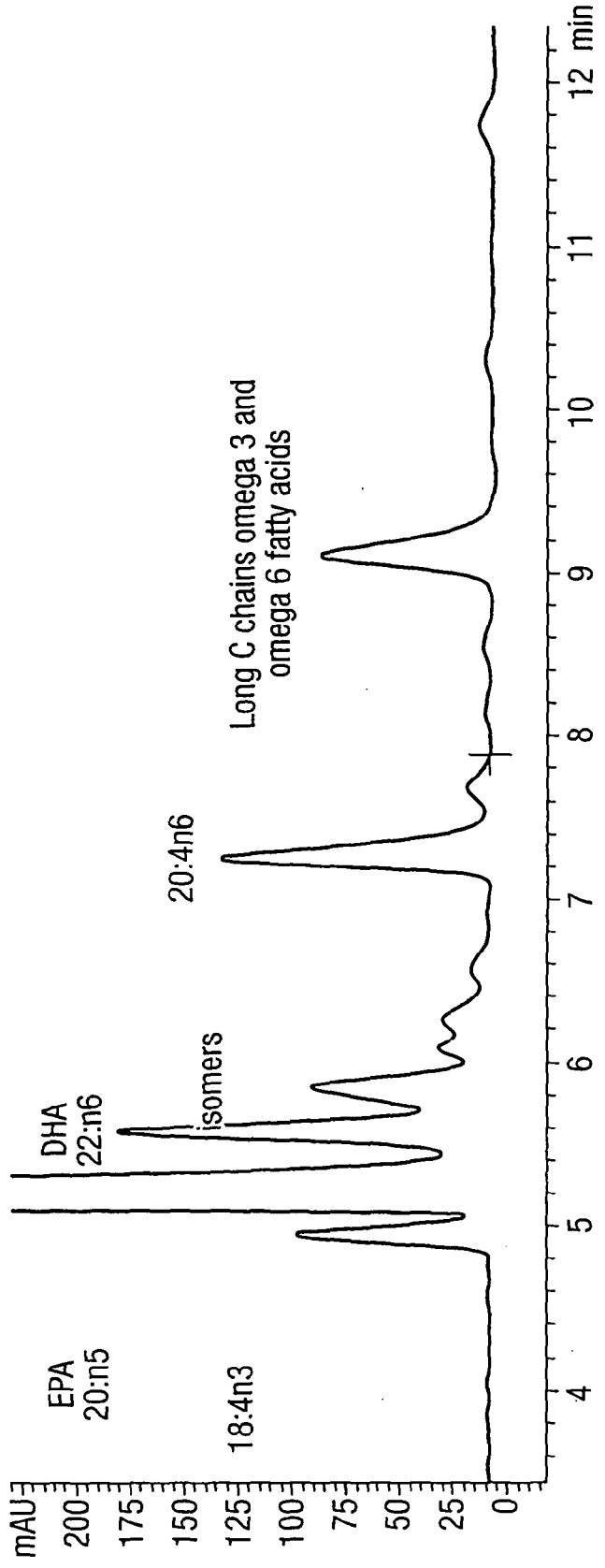
mAU
200
175
150
125
100
75
50
25
0
4
5
6
7
8
9
10
11
12 min
EPA
20:n5
18:4n3
DHA
22:n6
isomers
20:4n6
Long C chains omega 3 and
omega 6 fatty acids

Figure 12

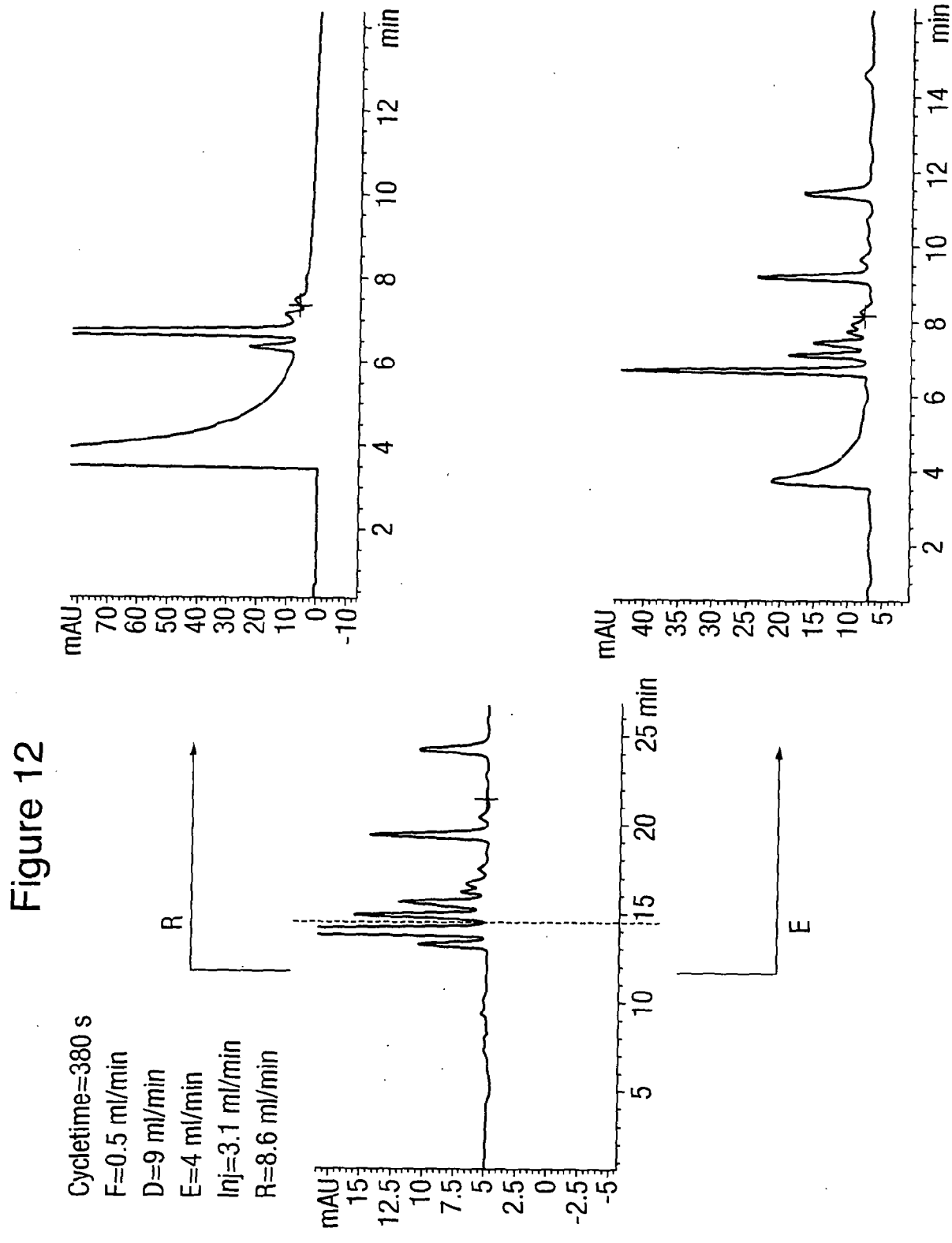
Cycletime=380 s
F=0.5 ml/min
D=9 ml/min
E=4 ml/min
Inj=3.1 ml/min
R=8.6 ml/min
R
E
mAU
min
25 min

Figure 13

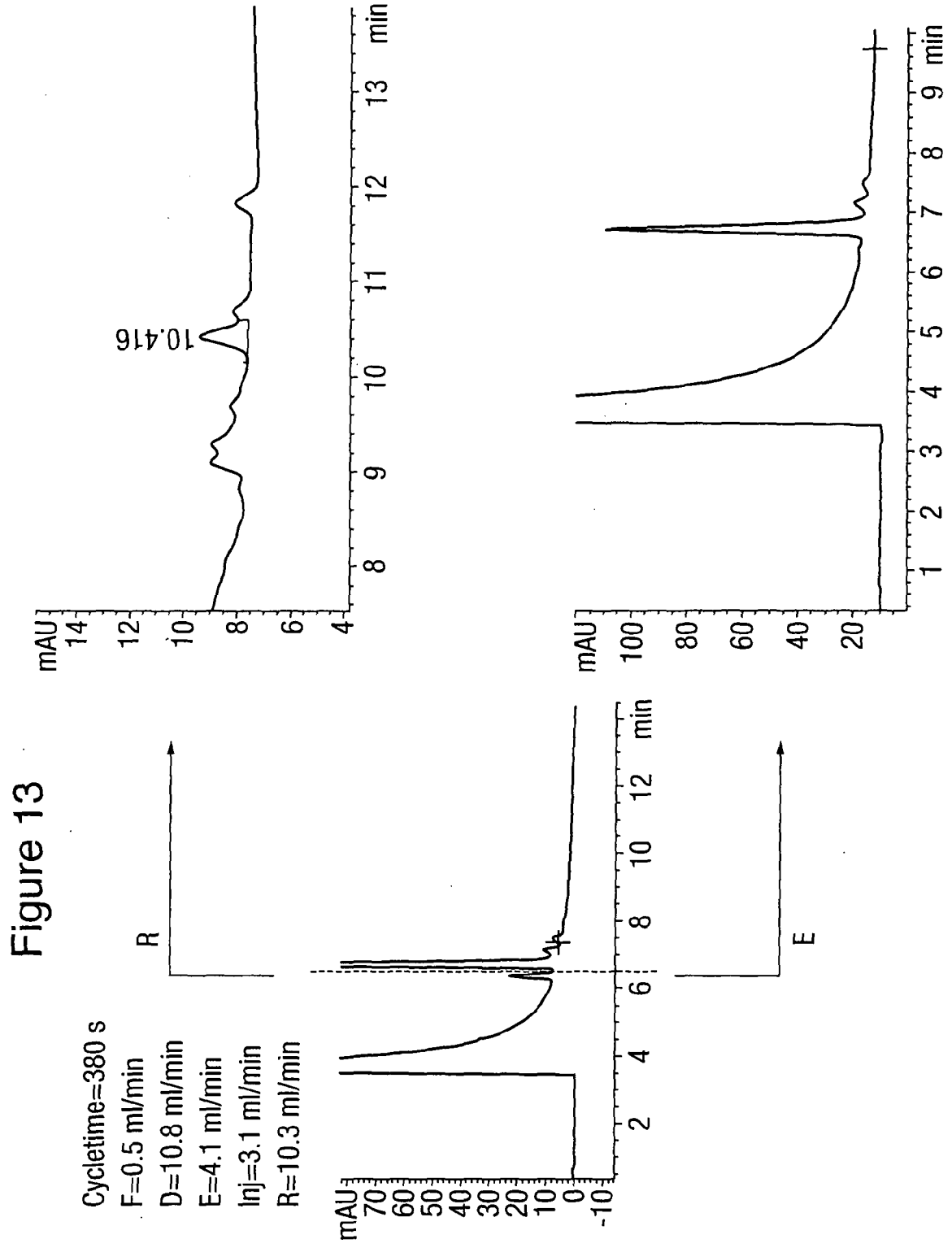
Cycletime=380 s
F=0.5 ml/min
D=10.8 ml/min
E=4.1 ml/min
Inj=3.1 ml/min
R=10.3 ml/min
R
E
mAU
min
10.416

Figure 14

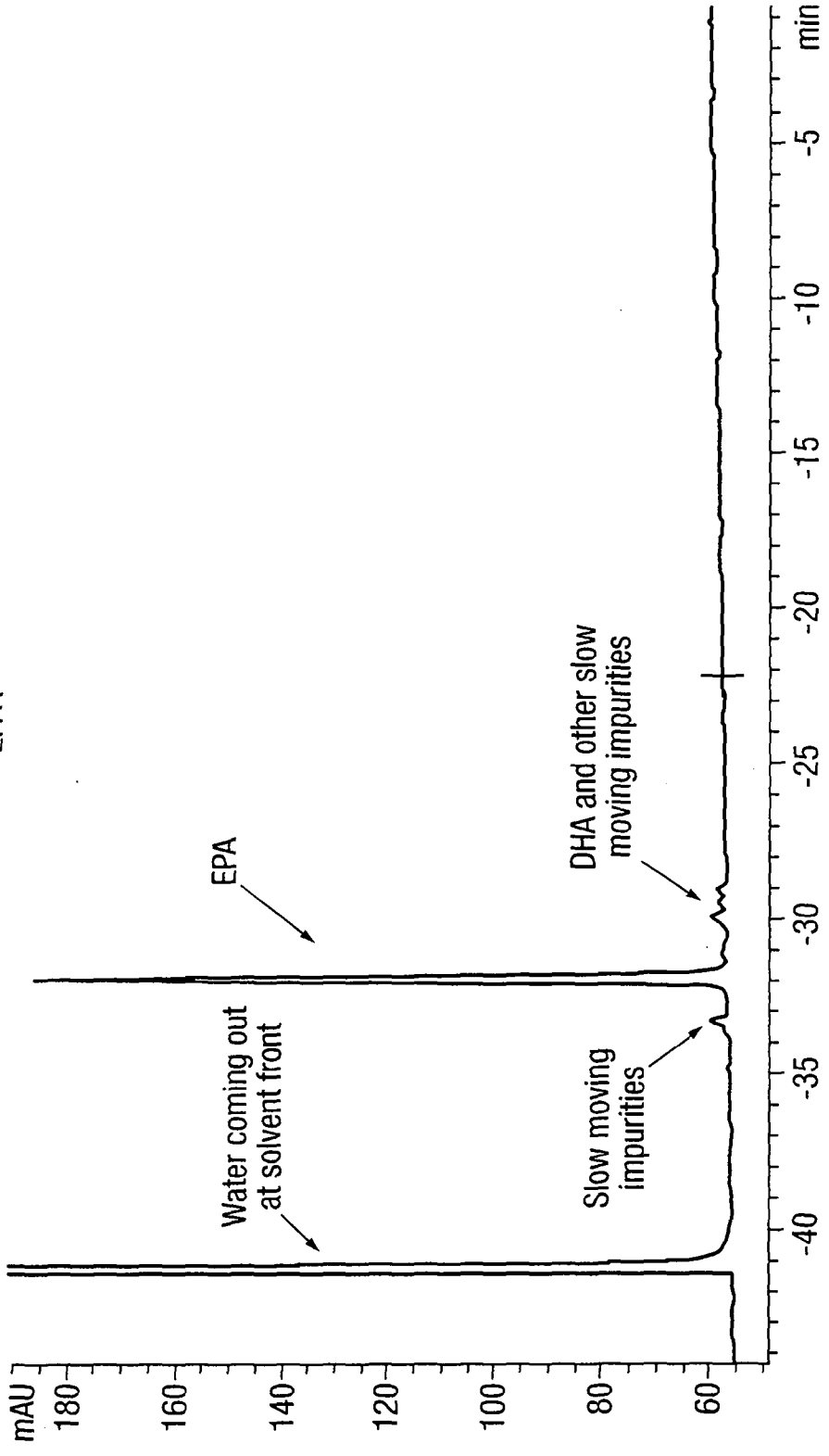
EPA I
mAU
180
160
140
120
100
80
60
-40
-35
-30
-25
-20
-15
-10
-5
min
Water coming out at solvent front
EPA
Slow moving impurities
DHA and other slow moving impurities

Figure 15

Zone 2 Extract – 97% DHA

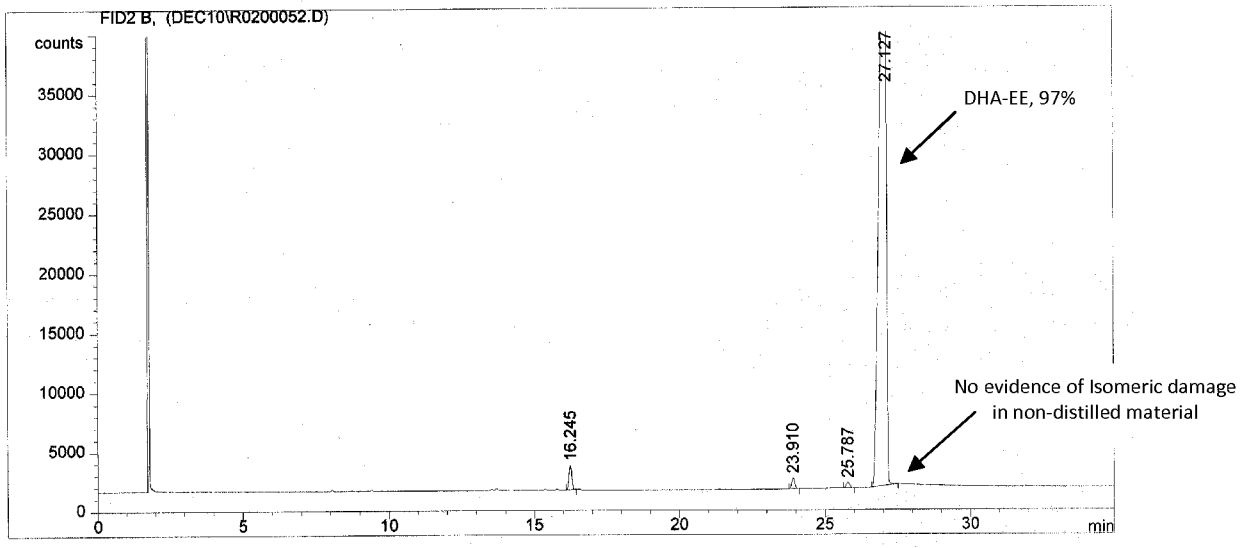

High purity DHA produced from non-distilled starting material no evidence of isomeric damage

Figure 16

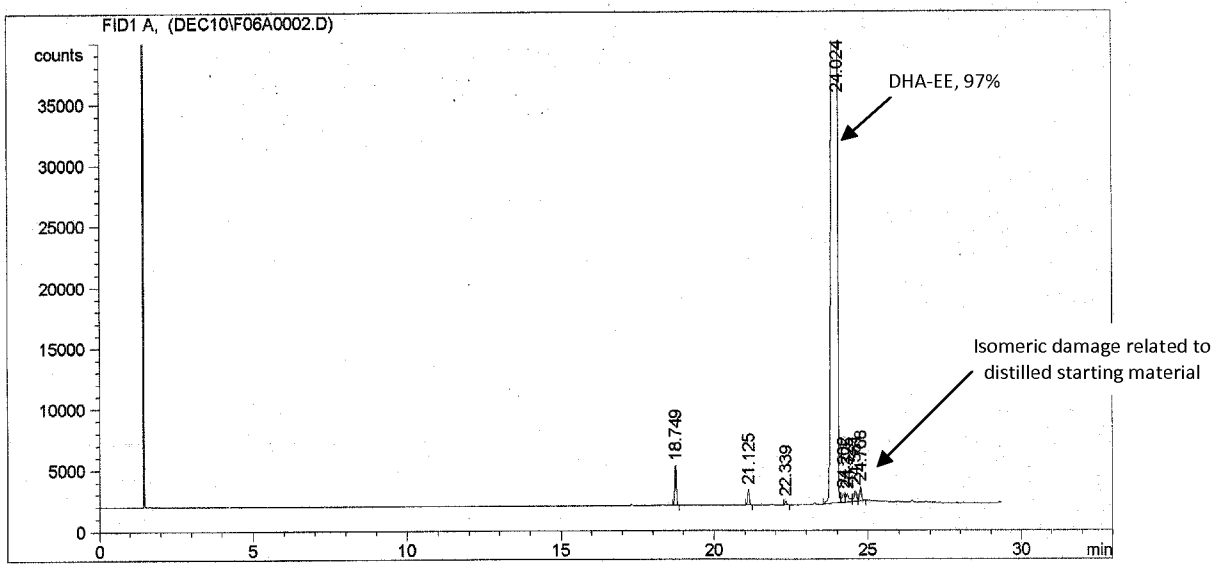

High purity DHA product from distilled starting material containing 1.5% isomeric impurities (total of 4 peaks by GC FAMEs)

INTERNATIONAL SEARCH REPORT

International application No
PCT/GB2012/051596

A. CLASSIFICATION OF SUBJECT MATTER
INV. B01D15/18 C11B3/10 C11C1/00 C11C1/08
ADD.

According to International Patent Classification (IPC) or to both national classification and IPC

B. FIELDS SEARCHED

Minimum documentation searched (classification system followed by classification symbols)
B01D C11B C11C

Documentation searched other than minimum documentation to the extent that such documents are included in the fields searched

Electronic data base consulted during the international search (name of data base and, where practicable, search terms used)
EPO-Internal

C. DOCUMENTS CONSIDERED TO BE RELEVANT

Category*	Citation of document, with indication, where appropriate, of the relevant passages	Relevant to claim No.
X	WO 2007/075499 A2 (ARCHER DANIELS MIDLAND CO [US]; BINDER THOMAS P [US]; GEIER DOUG [US];) 5 July 2007 (2007-07-05) paragraph [0032] - paragraph [0036]; claims 1-3	1-16
Y	WO 01/87452 A2 (PURDUE RESEARCH FOUNDATION [US]; WANG NIEN HWA LINDA [US]; XIE YI [US]) 22 November 2001 (2001-11-22) page 11, line 1 - line 31 page 54, line 1 - line 30 claims	1-16
Y	US 5 719 302 A (PERRUT MICHEL [FR] ET AL) 17 February 1998 (1998-02-17) column 10, line 27 - line 65; examples 2,3	1-16

-/--

[X] Further documents are listed in the continuation of Box C.

[X] See patent family annex.

* Special categories of cited documents :

"A" document defining the general state of the art which is not considered to be of particular relevance

"E" earlier application or patent but published on or after the international filing date

"L" document which may throw doubts on priority claim(s) or which is cited to establish the publication date of another citation or other special reason (as specified)

"O" document referring to an oral disclosure, use, exhibition or other means

"P" document published prior to the international filing date but later than the priority date claimed

"T" later document published after the international filing date or priority date and not in conflict with the application but cited to understand the principle or theory underlying the invention

"X" document of particular relevance; the claimed invention cannot be considered novel or cannot be considered to involve an inventive step when the document is taken alone

"Y" document of particular relevance; the claimed invention cannot be considered to involve an inventive step when the document is combined with one or more other such documents, such combination being obvious to a person skilled in the art

"&" document member of the same patent family

Date of the actual completion of the international search	Date of mailing of the international search report
17 September 2012	27/09/2012

Name and mailing address of the ISA/	Authorized officer
European Patent Office, P.B. 5818 Patentlaan 2 NL - 2280 HV Rijswijk Tel. (+31-70) 340-2040, Fax: (+31-70) 340-3016	Fourgeaud, Damien

2

Form PCT/ISA/210 (second sheet) (April 2005)

INTERNATIONAL SEARCH REPORT

International application No
PCT/GB2012/051596

C(Continuation). DOCUMENTS CONSIDERED TO BE RELEVANT

Category*	Citation of document, with indication, where appropriate, of the relevant passages	Relevant to claim No.
A	US 2007/158270 A1 (GEIER DOUG [US] ET AL) 12 July 2007 (2007-07-12) claims -----	1-16

2

Form PCT/ISA/210 (continuation of second sheet) (April 2005)

INTERNATIONAL SEARCH REPORT

International application No.
PCT/GB2012/051596

Box No. II Observations where certain claims were found unsearchable (Continuation of item 2 of first sheet)

This international search report has not been established in respect of certain claims under Article 17(2)(a) for the following reasons:

1. [X] Claims Nos.: 17
because they relate to subject matter not required to be searched by this Authority, namely:

see FURTHER INFORMATION sheet PCT/ISA/210

2. [ ] Claims Nos.:
because they relate to parts of the international application that do not comply with the prescribed requirements to such an extent that no meaningful international search can be carried out, specifically:

3. [ ] Claims Nos.:
because they are dependent claims and are not drafted in accordance with the second and third sentences of Rule 6.4(a).

Box No. III Observations where unity of invention is lacking (Continuation of item 3 of first sheet)

This International Searching Authority found multiple inventions in this international application, as follows:

1. [ ] As all required additional search fees were timely paid by the applicant, this international search report covers all searchable claims.

2. [ ] As all searchable claims could be searched without effort justifying an additional fees, this Authority did not invite payment of additional fees.

3. [ ] As only some of the required additional search fees were timely paid by the applicant, this international search report covers only those claims for which fees were paid, specifically claims Nos.:

4. [ ] No required additional search fees were timely paid by the applicant. Consequently, this international search report is restricted to the invention first mentioned in the claims; it is covered by claims Nos.:

Remark on Protest

[ ] The additional search fees were accompanied by the applicant's protest and, where applicable, the payment of a protest fee.

[ ] The additional search fees were accompanied by the applicant's protest but the applicable protest fee was not paid within the time limit specified in the invitation.

[ ] No protest accompanied the payment of additional search fees.

FURTHER INFORMATION CONTINUED FROM PCT/ISA/ 210

Continuation of Box II.1

Claims Nos.: 17

Claim 17 is directed to a computer program that should control the chromatographic process of claims 1 to 16. Such a program falls, however, under the exceptions listed in Rule 39.1 PCT, see point (vi). Consequently, in accordance with Article 17(2)(a)(i) PCT, no international search report is established for the subject-matter of this claim.

INTERNATIONAL SEARCH REPORT

Information on patent family members

International application No
PCT/GB2012/051596

Patent document cited in search report	Publication date	Patent family member(s)	Publication date
WO 2007075499 A2	05-07-2007	BR PI0620310 A2	08-11-2011
		CA 2633509 A1	05-07-2007
		EP 1979062 A2	15-10-2008
		US 2007181504 A1	09-08-2007
		US 2010093530 A1	15-04-2010
		WO 2007075499 A2	05-07-2007
WO 0187452 A2	22-11-2001	AU 6319201 A	26-11-2001
		WO 0187452 A2	22-11-2001
US 5719302 A	17-02-1998	AT 147776 T	15-02-1997
		AU 676910 B2	27-03-1997
		AU 6691794 A	21-11-1994
		CA 2159823 A1	10-11-1994
		DE 69401506 D1	27-02-1997
		DE 69401506 T2	11-09-1997
		DK 697034 T3	14-07-1997
		EP 0697034 A1	21-02-1996
		ES 2097047 T3	16-03-1997
		JP H08512336 A	24-12-1996
		US 5719302 A	17-02-1998
		WO 9425552 A1	10-11-1994
US 2007158270 A1	12-07-2007	BR PI0706490 A2	12-04-2011
		EP 1976611 A2	08-10-2008
		US 2007158270 A1	12-07-2007
		WO 2007133299 A2	22-11-2007