Dec. 3, 1968 D. F. FRICK 3,414,104

REPEAT-CHARACTER-DELAY CODE TRANSLATOR SYSTEM

Filed Sept. 26, 1966 6 Sheets-Sheet 1

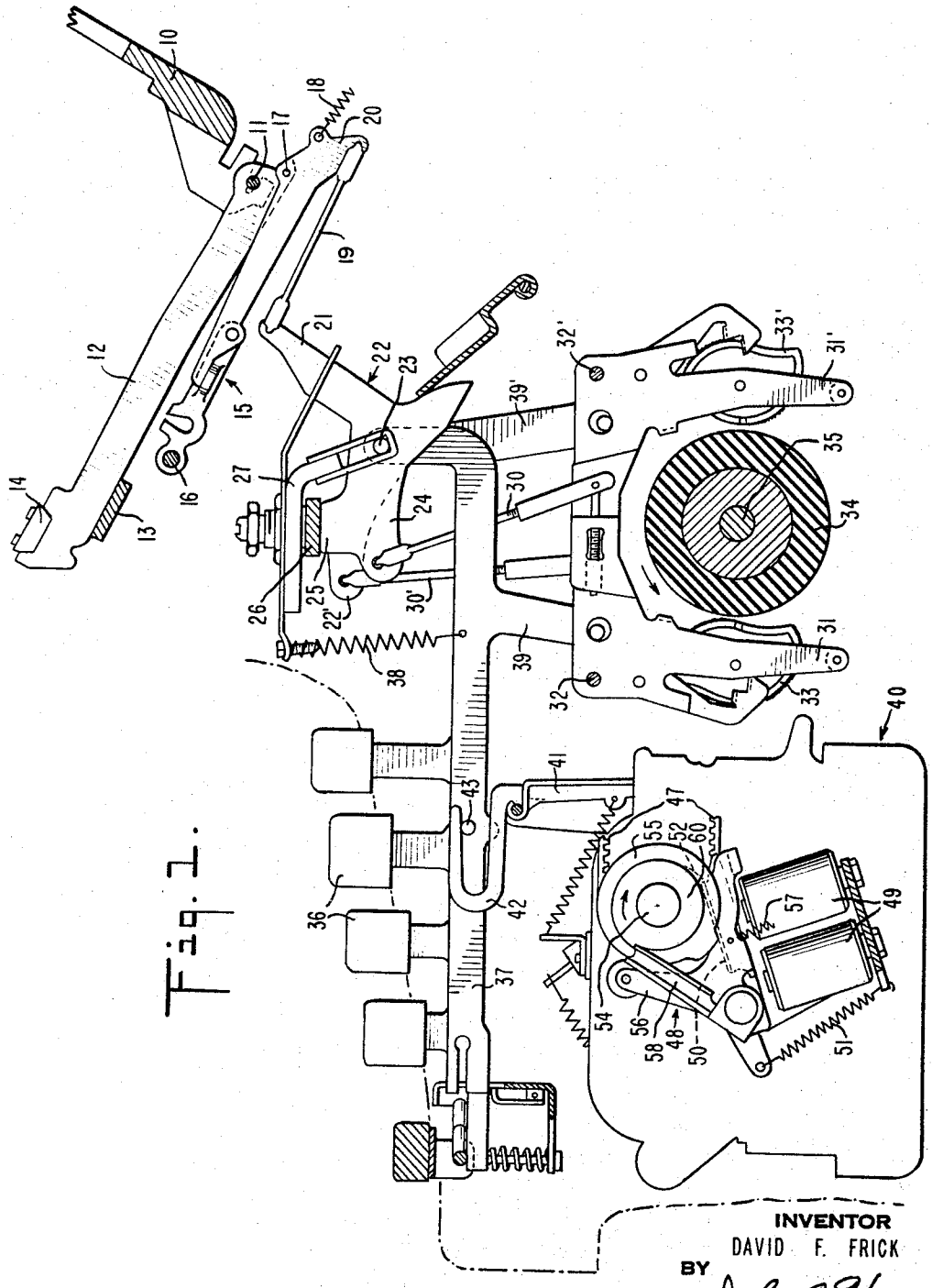

Fig. 1.

INVENTOR
DAVID F. FRICK

BY John A. Harvey

ATTORNEY

REPEAT-CHARACTER-DELAY CODE TRANSLATOR SYSTEM

Filed Sept. 26, 1966

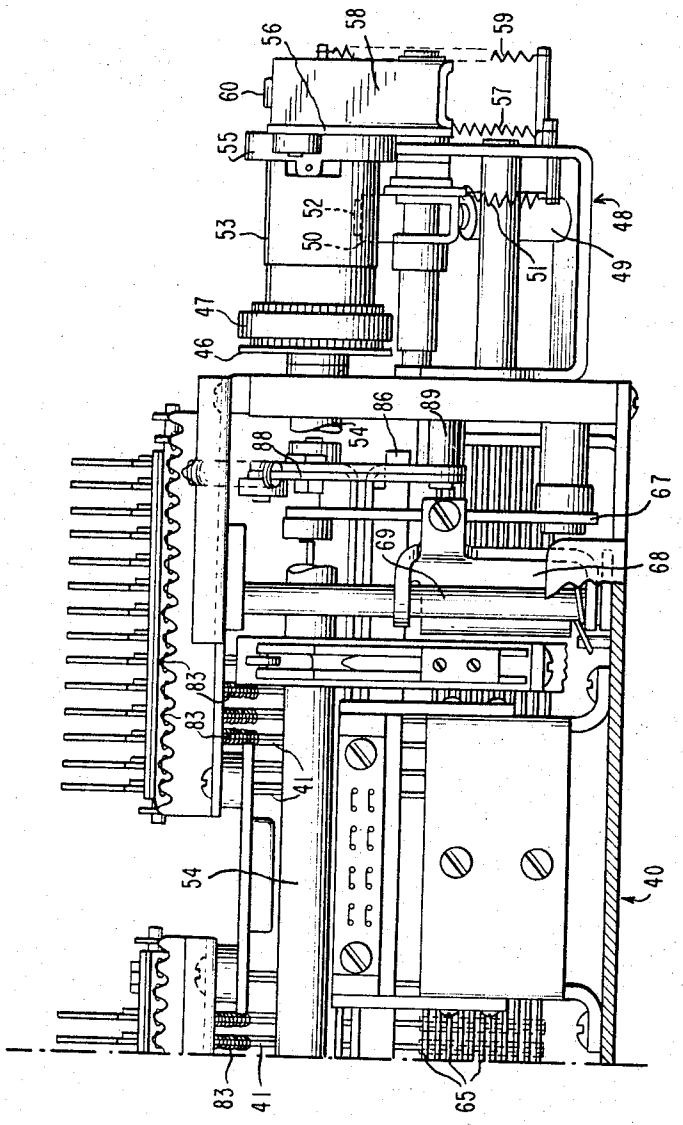

Fig. 2.

Dec. 3, 1968 D. F. FRICK 3,414,104

REPEAT-CHARACTER-DELAY CODE TRANSLATOR SYSTEM

Filed Sept. 26, 1966 6 Sheets-Sheet 3

Fig. 3.

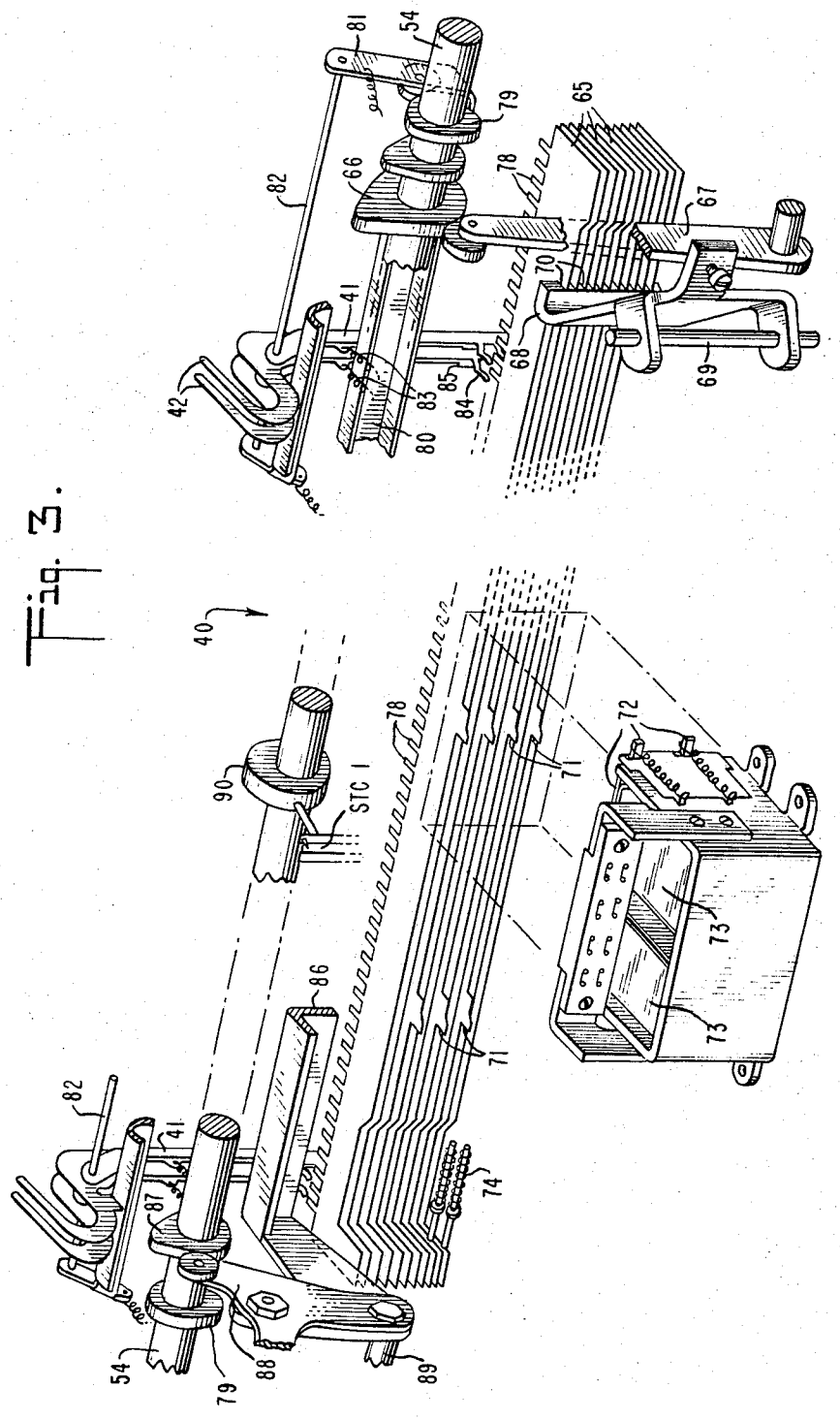

Dec. 3, 1968 D. F. FRICK 3,414,104

REPEAT-CHARACTER-DELAY CODE TRANSLATOR SYSTEM

Filed Sept. 26, 1966 6 Sheets-Sheet 4

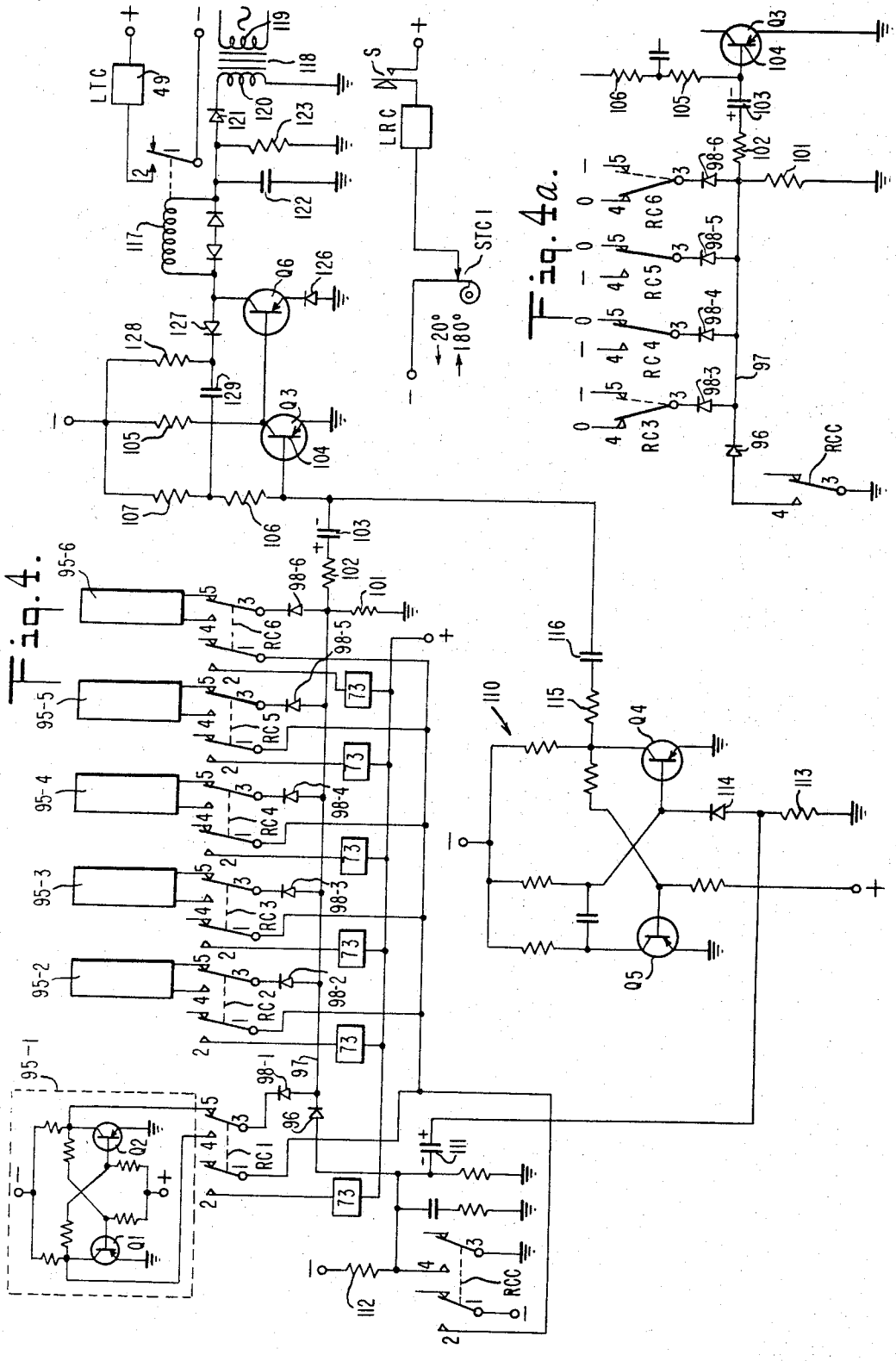

Fig. 4a.

Fig. 4.

Fig. 5.

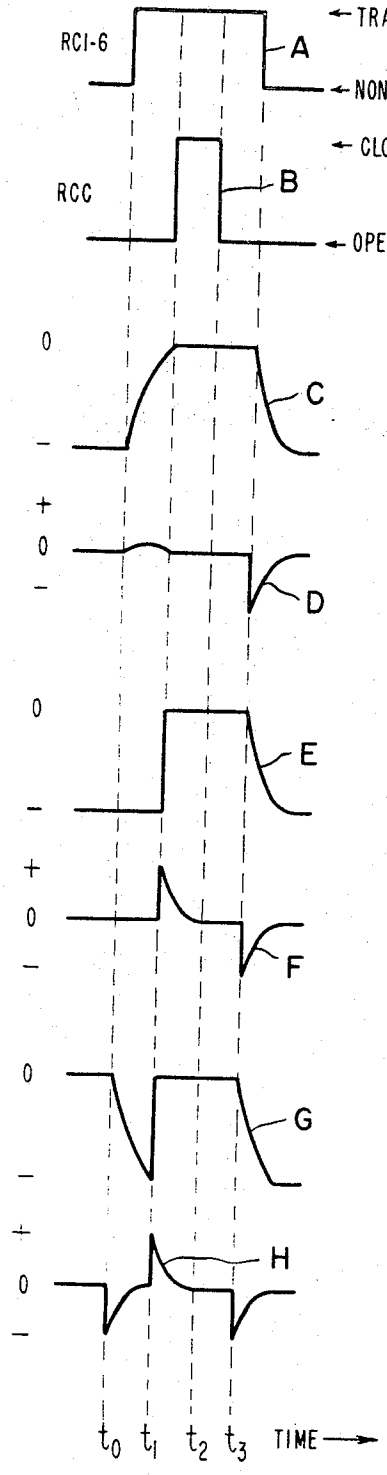
RCI-6
A
TRANSFER
NON-TRANSFER
RCC
B
CLOSE
OPEN
0
C
+
0
D
E
F
G
H
t_0 t_1 t_2 t_3 TIME

Fig. 7.

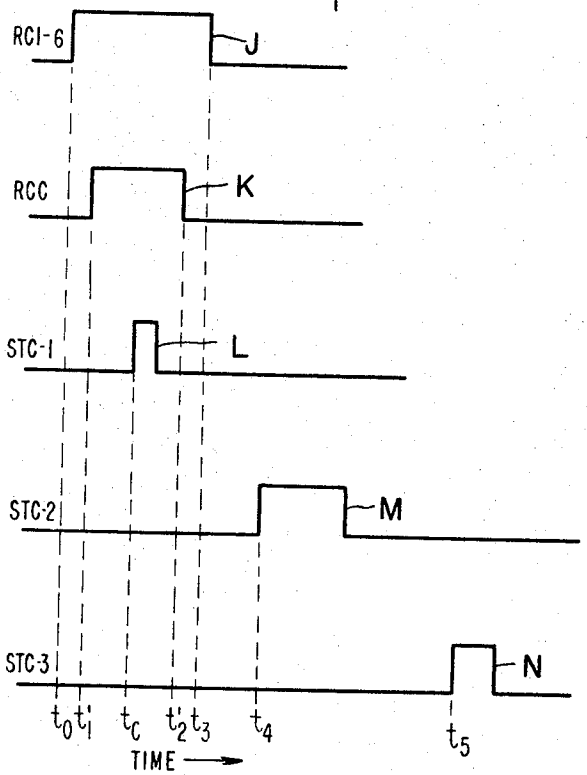
RCI-6
J
RCC
K
STC-1
L
STC-2
M
STC-3
N
t_0 t_1' t_c t_2' t_3 t_4 t_5
TIME

REPEAT-CHARACTER-DELAY CODE TRANSLATOR SYSTEM

Filed Sept. 26, 1966 6 Sheets-Sheet 6

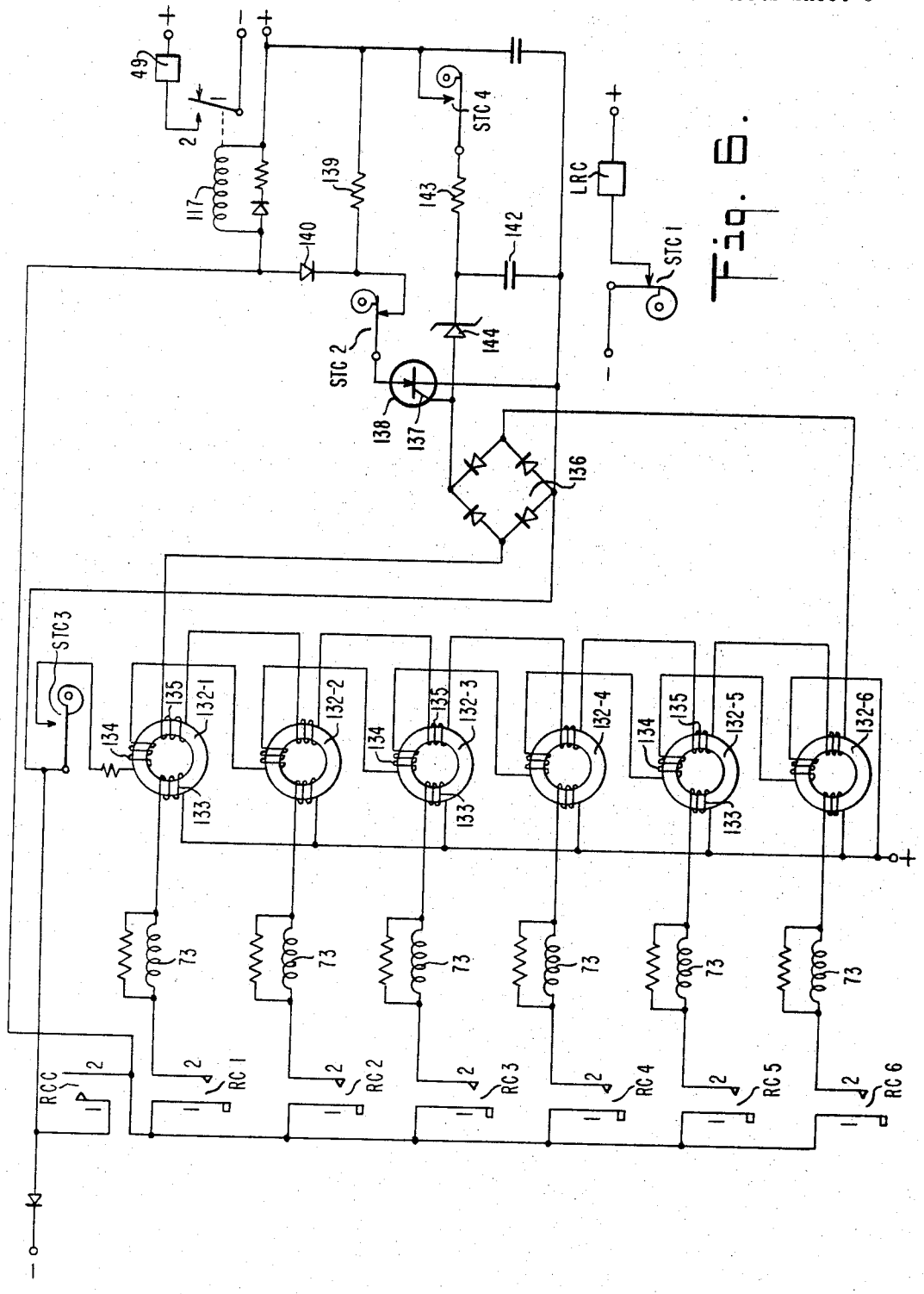

Fig. 6.

United States Patent Office 3,414,104 Patented Dec. 3, 1968

3,414,104

REPEAT-CHARACTER-DELAY CODE TRANSLATOR SYSTEM

David F. Frick, Castro Valley, Calif., assignor to Friden, Inc., a corporation of Delaware

Filed Sept. 26, 1966, Ser. No. 582,061
16 Claims. (Cl. 197—20)

ABSTRACT OF THE DISCLOSURE

The code translator is of the mechanical power driven type having a cycle-control clutch which is controlled to initiate each new translator cycle and during which a plurality of code permutation slides are set to permutational positions according to individual ones of the code elements in each of successive multiple code-element permutation electrical codes supplied to the translator. A plurality of translator seekers test each such permutational slide setting and are individually selected thereby for power drive actuation of a corresponding typewriter key lever to print successive alphanumeric and symbol characters during each of succesive translator cycles and at a cyclic rate higher than the repeat-character printing rate of the typewriter. An electrical storage register, which may be of the bistable multivibrator or core storage type, stores during an interval following completion of each translator cycle the binary-zero and binary-one code bits of the permutation code supplied to the translator during such each translator cycle. This stored code is compared with the next code supplied to the translator to ascertain whether such next code is identical to or is different from the stored code. If the comparison shows a code difference, the translator cycle-control clutch is so controlled as to initiate a translator cycle of operation concurrently with supply of the new code to it. If the comparison shows code identity, the translator cycle of operation is delayed in its initiation by the cycle-control clutch or is prolonged by clutch-controlled halt of the translator at an intermediate cyclic position. This reduces the operating rate of the translator to the repeat-character printing rate of the typewriter.

The present invention relates to code translator systems and structures and particularly to such systems and structures suitable for automatic print reproduction of data and functional control information supplied to a typewriter as, for example, from a punched paper tape. In greater particularity, the invention concerns a typewriter repeat-character-delay system for enabling operation of the typewriter at a high information print reproduction rate while temporarily reducing the operating rate whenever print reproduction of repetitive characters is required.

The widespread preparation of originally typed documents essentially identical in content may be accomplished rapidly and at low cost by the use of typewriters automatically controlled in operation by data and functional control information supplied from a data source such as a punched tape reader. Typical examples of typewriter-reader structures for this purpose are disclosed in the U.S. Patent No. 2,700,447, granted Jan. 25, 1955 to Edwin O. Blodgett and U.S. Patent No. 2,905,298, granted Sept. 22, 1959 to Edwin O. Blodgett and Wilbur C. Ahrns. The operating print-reproduction speed limitation in such automatically controlled typewriters is established by the operating rate of the typewriter printing mechanism, and particularly by the maximum rate at which any given type bar may be moved from a position of rest to a type impression position and returned to its position of rest. The frequent necessity to reproduce repetitively occurring alphanumeric characters and smbols has heretofore limited the maximum type reproduction rate of the typewriter to that at which a single type bar can be operated in repetitive type-reproduction manner. Were it not for such type bar repeat-character operational limitation, the reproduction rate of the typewriter could be substantially increased and would then only be limited by the possible overlapping of two adjacent type bars moving simultaneously.

It is an object of the present invention to provide a novel repeat-character-delay code translator system which enables automatic operation of a typewriter at a normal printing rate substantially higher than that heretofore readily available, as conventionally limited by the repetitive operation of a single type bar, and accomplishes this by automatic reduction of the printing rate upon any brief or prolonged repetitive operation of any type bar

It is a further object of the invention to provide a new and improved typewriter repeat-character-delay code translator system particularly suitable for attaining a significantly higher than normal printing rate in typewriters controlled for automatic high-rate reproduction of alphanumeric characters and symbols read from a record medium or supplied from a similar information source.

It is an additional object of the invention to provide a repeat-character-delay code translator system of relatively simple and inexpensive construction readily incorporated into present-day typewriter structures to enhance their print-reproduction operating rate, and one exhibiting high reliability free of operational error and requiring minimized service attention over prolonged operational intervals.

Other objects and advantages of the invention will appear as the detailed description thereof proceeds in the light of the drawings forming a part of this application and in which:

FIG. 1 is an elevational cross-sectional view illustrating the general type bar operating mechanism of a conventional electric typewriter having a code translator for automatic print reproduction of coded data and functional control information supplied to the typewriter as from a punched tape reader or other like data source, and thus one typeical of such structures in which the present invention has high utility;

FIG. 2 is an elevational side view illustrating an end portion of a conventional code translator and particularly shows the clutch controlled cyclic power drive of the translator, and FIG. 3 illustrates in isometric view the general construction of a conventional code translator such as that used in the typewriter construction of FIG. 1;

FIG. 4 is a diagram of an electrical circuit used in a typewriter repeat-character-delay code translator system embodying the present invention in a particular form, FIG. 4*a* being a fragmentary circuit diagram used in conjunction with certain electrical contact operational relationships and certain circuit voltage relationships graphically represented in FIG. 5 as an aid in explaining the operation of this form of the invention;

FIG. 6 is a diagram of an electrical circuit used in a repeat-character-delay code translator system embodying the present invention in a modified form; and

FIG. 7 shows circuit voltage and electrical contact operational relationships and is used in explaining the operation of the FIG. 6 modification of the invention.

The repeat-character-delay system of the present invention is particularly suitable for incorporation into otherwise conventional electric typewriters operated under the control of code translators for automatic print reproduction of coded information derived from data punched tape, tabulating cards, and like sources of data information. In order more fully to understand how the

present invention is so incorporated into such typewriters, and to perceive the novel and important operational results attained thereby, consideration will first be briefly directed to the construction and operation of the general type bar operating mechanism of a typical electric typewriter and its associated code translator control which enables automatic print reproduction of data read from a punched tape or tabulating card by a conventional tape or card reader as in the aforementioned Blodgett patents.

Referring now more particularly to FIG. 1 of the darwings, certain features of conventional typewriter construction and operation of particular interest in relation to the present invention are illustrated in elevational cross-sectional view. Reference may be made to the aforementioned patents for an understanding of the more complete construction and operation of such typewriters and of a punched tape data reader forming a component unit thereof for use in automatic print reproduction of data and functional control information read from the punched tape. The typewriter includes a conventional curvilinear anvil member **10** carrying a support wire or small rod **11** upon which the usual type bars **12** are pivotally supported for reciprocal angular motion between a position of rest against a stationary rest bar **13** and a type impression position at which type characters **14** fixed to the type bar **12** impact through a print ribbon (not shown) paper wrapped around the typewriter platen (not shown). As illustrated for one type bar **12** but duplicated for other such type bars, an articulated toggle member **15** is pivotally supported at one end on a fixed shaft **16** and is pivotally supported at its opposite ends on a pin **17** secured to an extended end of the type bar **12**. A helical wire spring **18** normally maintains the type bar **12** in its position of rest at which the toggle **15** is straightened. Angular power drive of the type bar **12** to print position is effected by a link member **19** which mechanically connects a bell-crank arm **20** of the toggle **15** to an arm **21** of a bell crank **22** pivotally supported upon a fixed shaft **23**. A second arm **24** of the bell crank **22** has an extended portion **25** which, in the rest position of the type bar **12**, engages a stop bar **26** supported upon a frame **27** secured between the side frames of the typewriter structure. The arm **24** of the bell crank **22** is mechanically connected through a link member **30** to an actuating bell crank **31** pivotally supported upon a shaft **32** and pivotally supporting a cam actuator **33**. Alternate type bars **12** in the type basket are mechanically connected by the structure just described to individual ones of a row of bell cranks **31** positioned forwardly (with respect the forward end of the typewriter) of a power roll **34** rotationally supported on a shaft **35** between the side frames of the typewriter and power driven at constant velocity by a drive motor, not shown. The intervening type levers of the type basket are mechanically connected by a similar structure to that just described and which includes a bell crank **22'** mechanically connected by a link member **30'** to an individual one of a rearwardly positioned row of bell cranks **31'** pivotally supporting individual cam actuators **33'** and pivotally supported upon a shaft **32'**.

The typewriter bell cranks **31** and **31'** are provided with latch structures, not shown, by which the bell cranks are latched in a position such that their associated cam actuators **33** and **33'** out of engagement with the power roll **34**. Upon manual actuation of a typewriter key button **36** angularly to depress an associated key lever **37** pivotally supported on the shaft **23** and normally biased by an individual helical wire spring **38** to non-depressed position, an extension arm **39** or **39'** of the key lever **37** unlatches an associated bell crank **31** or **31'** which thereupon pivots under force of a bias spring (not shown) to engage the associated cam actuator **33** or **33'** with the power roll **34**. The cam actuator **33** or **33'** is thereupon rotated by the power roll **34** to pivot the associated bell crank **31** or **31'** away from the power roll so that the remote end of the bell crank pulls down upon the associated link member **30** or **30'** angularly to move (in a counterclockwise direction as seen in FIG. 1) the associated bell crank **22** or **22'**. This angular motion of the latter bell crank operates through the link member **20** and toggle **15** to move the associated type bar **12** from its position of rest to its type impression position, the type bar thereafter returning to rest position under the bias force exerted by its associated spring **18**. To permit any type bar **12** to accomplish successive cycles of movement to type impression position and return to its rest position as required in typing successive repetitions of the same alpha-numeric character or symbol by the type bar, it has been conventional heretofore to limit the maximum rate of type reproduction to that required for a type bar **12** to complete each cycle of movement from its position of rest to its type impression position and return to its position of rest. Such reproduction rate thus is limited not only by the inertial mass of the type bar but by that of all mechanical components which are connected to and move with the type bar. This limitation on the operating rate is conventionally established in any of several well known manners, such as by design selection of the maximum diameter of the cam actuators **33** in relation to the diameter of the power roll **34** and by selection of the rotational velocity of the latter.

The typewriter operation just described in relation to manual operation of a key button **36** may also be accomplished automatically under control of a conventional code translator **40**. The latter was the general construction and operation more fully disclosed and described in a copending application of Donald G. Bastian, Ser. No. 582,134 (now U.S. Patent No. 3,340,987) filed concurrently herewith and assigned to the same assignee as the present application, and will only briefly be described hereinafter as necessary to an understanding of the present invention. It is controlled by permutational energizations of electrical code circuits corresponding to each data and functional control code supplied by a data source such as a punched tape reader. To this end, the translator **40** includes a plurality of seekers **41** each having a hooked end **42** engaging a pin **43** secured to the side of an individual one of the key levers **37** so that longitudinal power-drive movement of a seeker **41** by the code translator **40** pulls down an associated key lever **37** to cause operation of a type bar **12** in the same manner as just described for manual operation of a key button **36**.

As illustrated in FIGS. 1 and 2, the code translator **40** is power driven by a pulley **46** and belt **47** from the typewriter motor (not shown) and includes a translator cycle control clutch **48** of the helical wire spring type having a construction and mode of operation more fully disclosed and described in connection with FIGS. 5, 6 and 7 of the U.S. Patent No. 2,927,158, granted Mar. 1, 1960, to Edwin O. Blodgett. The clutch **48** is provided with an electromagnet **49** which is briefly energized to initiate a cycle of translator operation. Such energization is accomplished at a time and in a manner presently to be explained, and effects attraction of a pivoted armature **50** against the bias force of a spring **51** to withdraw the end of the armature structure from engagement with a stop detent protuberance **52** provided on the peripheral surface of the clutch housing **53**. This permits initiation of a cycle of clutch operation to drive a translator shaft **54** from the drive pulley **46**. In a first embodiment of the invention hereinafter described, the clutch includes only one stop detent protuberance **52** so that the clutch operating cycle effects a 360° rotation of the translator shaft **54** and thus drives the translator through a complete cycle of translator operation each time the electromagnet **49** is energized. A second described embodiment of the invention utilizes a translator clutch having an additional stop detent protuberance positioned to halt the clutch at 140° of its operating cycle just prior to power drive downward

movement of one of the translator seekers **41**. This partial-revolution form of clutch accordingly requires brief energization of the electromagnet **49** to initiate a cycle of clutch drive operation by releasing the clutch past its 0° or home position and requires a second brief energization of the electromagnet **49** to permit completion of the cycle of clutch operation by releasing the clutch past its 140° halt position. In either of these forms of clutch, however, the electromagnet **49** is deenergized prior to the end of the clutch drive cycle to permit the spring **51** to move the end of the armature structure **50** to a position where it again engages the protuberance **52** and thereby terminates the clutch drive cycle. An armature knock-off cam **55** and cam follower bell crank **56** biased into relative engaging relationship by a spring **57** forcibly moves the armature structure **50** away from the electromagnet **49** just prior to the end of the clutch cycle to prevent retention of the armature structure in attracted position by reason of any prevailing residual magnetic field. A pivoted detent member **58**, biased by a spring **59** to engage a detent notch provided in the peripheral surface of a collar **60** secured to the driven shaft **54**, prevents reverse rotation of the latter upon completion of the clutch drive cycle.

As illustrated in FIGS 2 and 3, the translator **40** includes a plurality of code permutation slides **65** supported by slotted end guide members (not shown) for longitudinal reciprocal motion between a reset position and a code selective unlatched position. Just prior to completion of each translator operating cycle, a cam **66** on the shaft **54** pivotally moves a cam follower lever **67** angularly to pivot a reset bell crank **68** about a shaft **69** normal to the direction of motion of the permutation slides **65**. This reset angular motion of the reset bell crank **68** engages the end of the latter with a notch **70** provided in an edge of the permutation slides **65** to move all of these slides concurrently to a reset position. Each of the permutation slides **65** is provided with an edge latch protuberance **71** arranged in groups as shown, and the slides are retained in latched position by engagement of their latch protuberances **71** with latch notches provided in the end surface of the pivoted armature **72** of a code selective electromagnet **73** individual to each permutation slide **65**. Having thus been moved to latched position by the latch bell crank **68**, the latter is angularly moved out of engagement with the slide notches **70** to permit each permutation slide to move under the bias force of an individual helical wire spring **74** to an unlatched position upon energization of its associated electromagnet **73** to attract its armature **72** out of latching engagement with the latch protuberance **71** of any such slide to be so unlatched. Each coded data and function control information item is supplied in the form of permutational code energizations of electrical circuits individual to the electromagnets **73** as will presently be described more fully, so that each such supplied coded information item causes permutational energization of selected ones of the electromagnets **73** to release selected ones of the permutation slides **65** to unlatched position while the remaining unenergized ones of the electromagnets **73** retain their corresponding permutation slides **65** in latched position.

The permutation slides **65** are identically notched along one edge to provide a plurality of equally spaced code selective projections **78** and these projections of the slides **65** are all aligned with one another in the reset position of the latter. The projections **78** of any unlatched permutation slide **65** move to a central position between the projections **78** of latched permutation slides. A cam **79** thereafter pivotally moves a seeker bail **80** supported by arms **81** on a shaft **82** to permit all of the seekers **41**, pivotally supported on the shaft **82**, angularly to move under bias force of an individual tension spring **83** toward the projections **78** of the permutation slides. The seekers **41** are provided along their length with tines **84** individual to each of the permutation slides **65** and laterally displaced in alignment with a projection **78** or the space between two such projections when the individual slide is in either latched or unlatched position. By selecting the pattern of laterally displaced tines **84** on each seeker **41**, the tines provided on only one of the seekers **41** will fail to engage any projection **78** of any of the permutation-code-positioned permutation slides **65** for each possible such permutational positioning. This one selected seeker will thus pivotally move to an actuation position at which a seeker notch **85** is engaged by a seeker actuating bail **86**. All others of the seekers **41** will be restricted in their angular motion by reason of the fact that at least one of their tines **84** will engage at least one projection **78** on the permutation-code-positioned permutation slides **65**. The seekers **41** are fabricated of two elongated members of which one is pivotally supported upon the shaft **82** and the other carries the notch **85** together with the hooked end portion **42** and is reciprocally movable longitudinally of the pivotally supported member. After one of the seekers **41** has been selected by the permutational setting of the slides **65** in the manner just explained, a cam **87** on the shaft **54** actuates a cam follower bell crank **88** pivoted on a stud shaft **89** angularly to reciprocate the seeker actuating bail **86** through a cycle of angular motion. This motion of the actuating bail **86** engages the notch **85** of the selected seeker **41** to effect a downward movement of the hooked end portion **42** of the selected seeker and thus actuate an individual key lever of the typewriter structure as earlier explained. The bail **80** then withdraws all of the seekers **41** from engagement with the slides **65**, and the latter are thereafter reset to latched position to await a further cycle of translator operation.

A cam **90** on the shaft **54** operates electrical contacts STC1 to closed-contact position between approximately 180° of one translator cycle and 20° of the following cycle for an electrical control function presently to be described.

FIG. 4 shows the electrical circuit diagram employed in a repeat-character-delay system embodying the present invention in a particular form. The source of coded data and functional control information is here shown by way of example as one of the punched tape reader type as in the above-mentioned Blodgett and Blodgett et al. patents. Such a reader operates in successive reader cycles each initiated by energization supplied to a reader clutch magnet LRC through a manually closed switch S and the cam-actuated contacts STC1 of the above-described code translator **40** when these contacts close between 180° of one translator cycle and 20° of the next cycle. The reader is provided with electrical contact sets, shown for example as comprised by six such sets RC1–RC6, which under control of the reader code-aperture sensing pins are individually selectively operated to closed-contact position each time an associated sensing pin senses a corresponding aperture in the punched code read during the reader cycle. As the reader cycle progresses the contacts **1** and **2** of the reader contact sets RC1–RC6 are closed at time t_0 and open at time t_3 after, the interval t_1–t_2 of closure of the contacts **1** and **2** of a set of reader cam-actuated common contacts RCC as graphically represented by respective curves A and B of FIG. 5. Upon closure of the contacts **1** and **2** of the reader common contacts RCC, energization is supplied through the contacts **1** and **2** of any operative ones of the reader contact sets RC1–RC6 to the corresponding code selector electromagnets **73** of the code translator **40** to unlatch corresponding ones of the permutation slides of the latter. The code translator **40** may have its clutch magnet LTC concurrently energized to initiate a cycle of translator operations unless such energization is delayed for a preselected interval, thus to delay the translator cycle and corresponding delay a typewriter key lever operation, by the sensing of a repeat character for print reproduction. The

manner and effect of such repeat character sensing will now be considered.

Each coded alpha-numeric, symbol and functional control item of information recorded in the punched tape is identified by an individual distinctive punched-aperture code comprised by the permutational combination of punched apertures and the lack thereof at preselected transverse positions (often identified as code "channels") aligned transversely of the tape and sensed by an aligned row of reader sensing pins. It is convenient to refer to a punched code aperture in the tape as one code bit causing closure of the contacts **1** and **2** of a corresponding one of the reader contact sets RC1–RC6 and to refer to the absence of an aperture as a zero code bit which prevents closure of the contacts **1** and **2** of a corresponding reader contact set RC1–RC6. The repeat-character-delay system includes a multi-bit information-item storage register for individually storing the zero and one code bits identifying each coded information item successively read from the punched tape. This storage register is conveniently comprised of a plurality of bistable multivibrators **95–1—95–6** each utilizing a pair of transistors Q_1 and Q_2 arranged in a conventional electrical circuit as shown for the multivibrator **95–1**. Each of the reader contact sets RC1–RC6 includes transfer contacts **3–5** of which the fixed contacts **4** and **5** are connected to the collector electrodes of the respective transistors Q_1 and Q_2. These fixed contacts control the individual conductive states of these transistors according to the transferred or non-transferred state of the movable contact **3** at the time t_1 when the contacts **3** and **4** of the reader common contacts RCC close to apply ground potential through a diode **96** to a conductor **97** which is connected through a plurality of diodes **98–1—98–6** to the contact **3** of the respective reader contact sets RC1–RC6. Thus with respect the multivibrator **95–1**, the transistor Q_2 will be rendered conductive to store a zero code bit if the contacts **3** and **5** of the reader contact set RC1 are closed at the t_1 when the contacts **3** and **4** of the reader common contacts RCC close, or alternatively the transistor Q_1 will be rendered conductive to store a one code bit if the contacts **3** and **4** of the reader contact set RC1 are closed when the contacts **3** and **4** of the reader common contacts RCC close. When the transistor Q_2 is conductive to store a zero code bit, the non-conductive state of the transistor Q_1 applies a negative potential to the contact **4** of the reader contact set RC1 to indicate the storage of the zero code bit; conversely, the storage of one code bit by the conductive state of the transistor Q_1 causes the non-conductive transistor Q_2 to apply negative potential to the contact **5** of the reader contact set RC1 to indicate such storage of the one code bit. Upon opening of the contacts **3** and **4** of the reader common contacts RCC at the time t_2, of the multivibrators **95–1—95–6** are thus left set storing individual one and zero code bits to the previously operated states of their associated reader contact sets RC1–RC6. The set state of each multivibrator by energizing its associated contacts **4** and **5** indicates whether the multivibrator stores a one or zero code bit.

The conductor **97** is connected to ground through a resistor **101** and is coupled through a series resistor **102** and a series condenser **103** to the base electrode **104** of a transistor Q_3. The latter has its emitter electrode connected to ground potential, has a series collector load resistor **105**, and is normally conductive by reason of a negative bias potential applied to the base electrode **104** through series resistors **106** and **107** from a source of negative potential as shown. In the interval between each successive operation of the reader contact sets RC1–RC6, the contacts **3–5** of the reader contact sets RC1–RC6 will usually maintain the conductor **97** at a negative potential for reasons presently to be explained, and the condenser **103** accordingly charges to a negative potential with respect to ground through the resistors **101**, **102**, **106** and **107**. Assuming that a new code causing operation of the reader contact sets RC1–RC6 corresponds to a previous code stored by the multivibrators **95–1—95–6**, as represented for example by the transferred states of the reader contact sets RC3 and RC6 and the non-transferred states of RC4 and RC5 of the fragmentary circuit diagram of FIG. 4*a*, zero or ground potential is then supplied by the multivibrators to the transferred and non-transferred contacts **3** of all the reader contact sets RC1–RC6 and this causes the conductor **97** also to be at zero or ground potential. The condenser **103** thereupon discharges during the time interval t_0–t_1 at a relatively slow rate through the resistors **102**, **105** and **106** and reaches ground potential by the time contacts **3** and **4** of the reader common contacts RCC close at time t_1. The closure of these contacts then does not affect the charge of the condenser **103** during the interval t_1–t_2 of closure of the reader common contacts RCC as represented by curve C of FIG. 5. When the operated ones of the reader contact sets RC1–RC6 return at time t_3 to their non-operated states as represented in broken lines for the contact sets RC3 and RC6 in FIG. 4*a*, the contacts of these contact sets will be negatively energized by the storage state of their associated multivibrators **95–1—95–6** and thus will place negative energization upon the conductor **97**. The condenser **103** thereupon recharges through the emitter-base electrodes of the transistor Q_3 once more to a negative potential with respect to ground as further represented by curve C of FIG. 5 The discharge and charge voltage thus applied by the condenser **103** to the base electrode **104** of the transistor Q_3 under the condition here assumed is graphically represented by curve D of FIG. 5 and does not affect the continuing state of conductivity of the transistor Q_3. The condition assumed, however, is one involving a repeat characted wherein successive identical codes are read by the reader contact sets RC1–RC6 which upon being operated by the second of such codes effectively coincidence sample the previously stored code and find successive code identity. The energization of the translator clutch magnet **49** is accordingly delayed in a manner which will now be considered.

The present system includes a delay means comprised by a monostable multivibrator **110** having a pair of transistors Q_4 and Q_5 arranged in a conventional monostable multivibrator circuit in which the transistor Q_4 is normally conductive and transistor Q_5 normally nonconductive. In the intervals between the closure of the contacts **3** and **4** of the reader common contacts RCC, a condenser **111** is charged to the polarity shown in the drawing by charging current supplied from a negative energizing source through series resistors **112** and **113**. When the contacts **3** and **4** of the reader common contacts RCC close at time t_1 as represented by curve B of FIG. 5, the condenser **111** is rapidly discharged through the resistor **113** to produce across the latter a positive voltage pulse. This voltage pulse is supplied through a diode rectifier **114** to the base electrode of the transistor Q_4 to render the latter non-conductive and thereby render the transistor Q_5 conductive, whereupon a negative potential pulse is applied through a series resistor **115** and a series condenser **116** to the base electrode **104** of the transistor Q_3. This negative potential pulse does not affect the continuing state of conductivity of the transistor Q_3. After a preselected time interval established in well-known manner by selection of the component values of the multivibrator **110**, the transistor Q_5 becomes non-conductive to render the transistor Q_4 again conductive and thereby to supply through the resistor **115** and condenser **116** a positive potential pulse to the base electrode **104** of the transistor Q_3.

This positive potential pulse renders the transistor Q_3 non-conductive. The transistor Q_3 upon thus becoming non-conductive renders a transistor Q_6 conductive to energize a relay winding **117** from a conventional negative energy source shown as of the half-wave rectification type including a transformer **118** having a primary winding **119** energized from a suitable alternating source and

having a secondary winding **120** which is connected through a diode rectifier **121** to an output filter network comprising a shunt filter condenser **122** and shunt resistor **123**. Energization of the relay winding **117** effects closure of its contacts **1** and **2** to energize the translator clutch magnet **49** and thus initiate a cycle of translator operation in the manner previously explained. The transistor Q_6 is included with the transistor Q_3 in a monostable multivibrator circuit which includes a diode rectifier **126** in the emitter electrode circuit of the transistor Q_6, a diode rectifier **127** coupling the collector electrode of the transistor Q_6 through a resistor **128** to the negative energizing source of the transistor Q_3, and a condenser **129** which couples the emitter electrode of the transistor Q_6 through the diode rectifier **127** to the juncture of the bias resistors **106** and **107** of the transistor Q_3. The component values of this multivibrator circuit are so selected in well-known manner that the transistor Q_6 remains conductive during a brief interval while the charge of the condenser **129** changes to maintain the transistor Q_3 non-conductive after which the latter becomes conductive once more and renders the transistor Q_6 non-conductive. This deenergizes the relay winding **117** which opens its contacts **1** and **2** to deenergize the translator clutch magnet **49**, so that the conductive interval of the transistor Q_6 releases the translator clutch past its home or zero-cycle position but deenergizes the translator clutch magnet **49** sufficiently early in the translator cycle that the translator may again be halted at its home position by the deenergized state of the translator clutch magnet **49**.

Thus upon the reading of successive identical codes by the reader contact sets RC1–RC6 as indicative of a repeat character operation, the multivibrator **110** so controls the transistor Q_3 as to delay for a pre-selected interval (established by the multivibrator **110**) the energization of the translator clutch magnet **49** and thereby the initiation of the succeeding cycle of operation of the translator. The translator cam-actuated contacts STC1 cause this delayed operation of the translator in turn to delay the initiation of a succeeding cycle of operation of the punched tape reader, and the translator delay permits the selected typewriter type bar to complete an initial full cycle of its reciprocatory motion in effecting print reproduction of the repeated character.

When the reader contact sets RC1–RC6 read successive codes representing differently coded alpha-numeric and symbol characters, it will be evident that upon reading the second of such successive codes the transfer contacts **3** of the contact sets will find at least one of the contacts **4** and **5** associated with at least one of the multivibrators **95–1—95–6** negatively energized by reason of the differing codes read. For example, assume that the first of two successive codes operates the reader contact sets RC3 and RC6 as shown in FIG. *4a* and that the second of the codes operates either of the contact sets RC4 or RC5 or fails to operate both of the contact sets RC3 and RC6. Under this assumed condition, at least one of the contacts **3** of these contact sets will move into engagement with an associated negatively energized contact **4** or will remain in contact with a negatively energized conductor **4**. The reading of two successive differing codes thus places the conductor **97** at a negative potential with respect to ground during the initial portion t_0–t_1 of the contact set operating interval t_0–t_3 so that the charge of the condenser **103** does not change in the time interval t_0–t_1 as represented by curve E of FIG. 5. Now when the contacts **3** and **4** of the reader common contacts RCC close at time t_1, the condenser **103** is rapidly discharged at time t_1 through the reader common contacts RCC as further shown by curve E. This effectively places a positive potential pulse at time t_1 on the base electrode **104** of the transistor Q_3, as graphically represented by curve F of FIG. 5, to render the transistor Q_3 non-conductive. The transistor Q_6 is thereupon rendered conductive to effect immediate energization of the translator clutch magnet **49** at time t_1 without delay

The multivibrator **110** has its cycle of operation also initiated at time t_1, in the manner earlier described, by closure of the contacts **3** and **4** of the reader common contacts RCC. However, the negative pulse applied at this time by the multivibrator **110** to the base electrode **104** of the transistor Q_3 is selected to be appreciably smaller in amplitude than the positive potential pulse applied by the condenser **103** to the transistor Q_3 so that the latter pulse is effective at time t_1 to render the transistor Q_3 non-conductive as just described. The transistor Q_3 remains non-conductive during the operating cycle of the multivibrator **110**, and the positive potential pulse later applied to the transistor Q_3 upon completion of the multivibrator **110** operating cycle accordingly has no effect on the conductive state of the transistor Q_3.

Thus it will be seen that whereas the reading of successive identical codes by the reader contact sets RC1–RC6 effects delayed energization of the translator clutch magnet **49** in the manner first described, the reading of successive differing codes by the reader contact sets RC1–RC6 effects immediate energization at time t_1 of the translator clutch magnet **49** without delay as last described. This non-delayed energization of the translator clutch magnet **49** to initiate a new non-delayed translator cycle of operation, and thereby a non-delayed reader cycle of operation, enables the typewriter to operate at a higher print reproduction rate by reason of the initiation of a reciprocatory cycle of type bar operation prior to completion of the reciprocatory cycle of operation of the preceding type bar operated.

A special repeat character mode of operation meriting attention concerns the reading of successive blank codes (all zero code bits) and the reading of successive blank and non-blank codes by the reader contact sets RC1–RC6. Assume that a first blank code (none of the reader contact sets RC1–RC6 is operated) is followed by the reading of a second blank code. After the reading of the first blank code, all of the multivibrators **95–1—95–6** have been set to store a zero code bit so that the conductor **97** remains at ground potential after this code is read and to the time t_0 of reading the second blank code. Between the first and second code reading intervals, the charge of the condenser **103** remains essentially at ground potential. Since none of the reader contact sets RC1–RC6 is operated upon reading the second blank code, the charge of the condenser **103** is not affeceted during the time interval t_0–t_1 of the new code nor is it affected when the contacts **3** and **4** of the reader common contacts RCC close at time t_1. Thus the transistor Q_3 remains conductive at time t_1 of the second blank code and the energization of the translator clutch magnet **49** is delayed for a preselected interval under control of the multivibrator **110** as earlier described. Assume now that the next or third code read is not a blank code. In this event, at least one of the reader contact sets RC1–RC6 is operated so that the contacts **3** and **4** of such operated contact set or sets now energizes the conductor **97** to a negative potential during the interval t_0–t_1 of this code. The condenser **103** thereupon charges to a negative potential as graphically represented by curve G of FIG. 5, thus applying a negative pulse to the base **104** of the transistor Q_3 to maintain the latter conductive during the interval t_0–t_1 as graphically represented by curve H of FIG. 5. Now when the contacts **3** and **4** of the reader common contacts RCC close at time t_1, the condenser **103** is rapidly discharged to apply a positive potential pulse to the base **104** of the transistor Q_3 as shown by curve H. This positive pulse renders the transistor Q_3 non-conductive to effect energization of the translator clutch magnet **49** at time t_1 and without delay in the manner explained. Thus the reading of successive blank codes effects delayed energization of the translator clutch magnet **49** with resultant delay in the initiation of a cycle of translator operation, whereas the reading of a blank code followed by a succeeding nonblank code effects non-delayed energization of the translator clutch magnet **49**

and thus the initiation without delay of a cycle of the translator operation.

A repeat character delay system embodying the present invention in a modified form utilizes an electrical control system shown in FIG. 6. The code translator in this form of the invention has a partial revolution type of clutch such as that illustrated and described in relation to FIG. 4 of the aforementioned Blodgett et al. Patent No. 2,927,158 except that whereas the Blodgett et al. clutch has 180° physically displaced stop protuberances for halting the clutch at its 0° and 180° cyclic positions the translator clutch of the modified form of the present invention includes stop protuberances at its 0° and 140° cyclic positions.

As shown in FIG. 6, the modified form of the present invention includes a multi-bit information-item storage register of the magnetic core storage type for storing zero and one code bits identifying each coded information item successfully presented for print reproduction. In particular, the register is comprised by a plurality of cores **132–1—132–6** formed of a magnetic material exhibiting a small-area or so-called "square" hysterises loop and thus one which may be readily saturated in either of two magnetic polarities and which essentially retains its full saturation magnetism upon removal of the magnetizing current. To this end, each core includes a first magnetizing winding **133** which sets the core to one polarity of magnetic saturation representing storage of a one code bit, includes a second magnetizing winding **134** which "resets" the core to the opposite polarity of magnetic saturation representing storage of a zero code bit, and includes an output winding **135** in which an output potential pulse is developed if there is a change in the setting of the core from one to the other of its polarities of magnetic saturation.

The contacts **1** and **2** of the reader contact sets RC1–RC6 close upon reading individual one code bits of an information-item code as previously described, and upon closing energize an associated translator code magnet **73** in series with the first energizing winding **133** of the associated magnetic storage core **132–1—132–6**. If any such core was previously set to a magnetic polarity of saturation corresponding to the storage of a zero code bit, energization of the first energizing winding **133** reverses the polarity of magnetic saturation of the core and thus produces an output potential pulse in the output winding **135** of this core. All of the output windings **135** of the several storage cores are connected in series to a diode bridge rectifier **136** so that an output pulse produced in the manner last described is supplied through the rectifier **136** to the gate electrode **137** of a silicon controlled rectifier **138**. The interval of closure t_0–t_3 of the contacts **1** and **2** of the reader contact sets RC1–RC6 is graphically represented by curve J of FIG. 7, and the output pulse thus applied to the gate electrode **137** of the silicon controlled rectifier **138** occurs at time t'_1 when the reader contacts RCC first operate as graphically represented by curve K of FIG. 7. This applied pulse renders the silicon controlled rectifier **138** conductive by energization supplied through the normally closed contacts of translator cam actuated contacts STC2 and a current limiting resistor **139** having connected in shunt thereto a series circuit comprising a diode rectifier **140** and the relay energizing winding **117**. The relay is concurrently energized directly at time t'_1 by closure of the contacts **1** and **2** of the reader common contacts RCC, and upon being thus energized closes its contacts **1** and **2** to energize the translator clutch magnet **49** and initiate a cycle of translator operation by releasing the clutch from its 0° or home position. The conductive state of the silicon controlled rectifier **138** continues until later terminated in a manner presently to be explained, and thus maintains the relay winding **117** energized sufficiently long as to release the clutch past its 140° halt position by continued energization of the clutching magnet **49**. The translator thus completes its cycle of operation without delay.

It may be noted that the storage core output pulse produced as last described signifies a change in at least one code bit of the code presently read by the reader contact sets RC1–RC6 and the code previously read and stored in the magnetic storage cores **132–1—132–6**, so that the silicon controlled rectifier **138** in being immediately rendered conductive effects by its continuing state of conductivity immediate energization of the translator clutch magnet **49** past the 140° halt position of the translator clutch to complete a translator cycle of operation without delay.

If upon reading the new code the operated reader contacts RC1–RC6 in energizing the corresponding energizing windings **133** of their associated cores do not cause any core to produce an output pulse in its output winding **135**, this signifies that all of these cores store a one code bit of the preceding code and to this extent indicates that the present and previous codes are the same. The contacts **1** and **2** of the reader common contacts RCC close at a time t'_1 and open at a time t'_2 as graphically represented by curve K of FIG. 7, and upon closing energize the relay winding **117** to initiate a translator cycle of operation as earlier described. The translator cycle thus begins even though the silicon controlled rectifier **138** does not become conductive at this time. As the translator progresses through its cycle of operation, a pair of translator cam actuated contacts STC3 close at time t_c as graphically represented by curve L of FIG. 7. The closure of these contacts supplies energization to the reset winding **134** of all of the storage cores **132–1—132–6** to change the polarity of magnetic saturation of those cores which previously stored a one code bit and which are not presently retained in their one polarity of magnetic saturation by the continuing closure of the contacts **1** and **2** of the associated reader contact sets RC1–RC6. Should this energization of the reset windings **134** produce an output pulse in the output winding **135** of any core, the output pulse as before is supplied through the bridge rectifier **136** to the gate electrode **137** of the silicon controlled rectifier **138** to render the latter conductive. The relay winding **117** and translator clutch magnet **49** are thereupon energized to release the translator clutch without significant delay past its 140° halt position in the manner previously described. It may be noted here again that any such output pulse developed as last described signifies that the presently read code differs in respect at least one zero code bit from the code previously read and stored in the magnetic storage cores, so that the translator cycle of operation may accordingly be completed without delay.

It will be evident in light of the operations just described that energization of the first energizing winding **133** under control of the operated reader contact sets RC1–RC6 samples any differences existing between the one bits of the code presently read and the corresponding one bits of the previous code stored by the storage cores, that the energization of the reset windings **134** under control of the cam actuated contacts STC3 samples the differences between the zero code bits of the present code and corresponding zero bits of the previous code stored by the storage cores, and that any difference of a zero or one bit between the present and previous codes signifies that the present code is different from the previous code and thus that the translator clutch magnet **49** may be promptly energized to release the translator clutch past its 140° halt position and complete the translator cycle without delay.

Should the silicon controlled rectifier **138** not be rendered conductive at or prior to the time the reset windings **134** are energized by the translator cam actuated contacts STC3, it will be evident from what has just been said that there is identity of all code bits as between the present code and that previously read and stored in the storage cores. This code identity requires delay in com-

pleting the cycle of translator operation, and this is accomplished by delaying the second energization of the translator clutch magnet **49** to halt the translator for a brief interval at its 140° cyclic position. Such delay is provided by translator cam actuated contacts STC4 which close at time t_4 just prior to and during the halt of the translator at its 140° cyclic position as graphically represented by curve M of FIG. 7. These contacts upon closing charge a condenser **142** through a resistor **143** until the charge potential of the condenser **142** increase to a value sufficient to produce breakdown of a Zener diode **144**, at which time the charge potential of the condenser **142** is applied to the gate electrode **137** of the silicon controlled rectifier **138** to render the latter conductive. The conductive state of the silicon controlled rectifier **138** now energizes the translator clutch magnet **49** in the manner previously described to release the translator past the 140° cyclic position at which it was halted.

Once the silicon controlled rectifier **138** has been rendered conductive to energize the translator clutch magnet **49** with or without delay, it remains energized until it is deenergized by the opening of the translator cam actuated contacts STC2 at time t_5 as graphically represented by curve N of FIG. 7. The time t_5 of opening of the latter contacts occurs toward the end of the translator cycle of operation, but is yet sufficiently early in the cycle as to permit the tarnslator to halt at its 0° or home position.

It will be evident from the foregoing description of the invention that the invention provides a new and improved typewriter repeat-character-delay code translator system particularly suitable for attaining a significantly higher than normal printing rate in type-writers controlled for automatic high-rate reproduction of alpha-numeric character and symbols read from a record medium or supplied from a similar information source. The invention has the further advantage that it not only enables automatic operation of typewriters at a normal printing rate substantially higher than that heretofore readily available, as conventionally limited by the repetitive operation of a single type bar, but additionally is of relatively simple and inexpensive construction readily incorporated into present-day typewriter structures and exhibits high reliability free of operational error and requiring minimized service attention over prolonged operational intervals.

While there have been specific forms of the invention described for purposes of illustration, it is contemplated that possible changes may be made without departing from the spirit of the invention.

What is claimed is:

1. A repeat-character-delay code translator system comprising:

(a) cyclic code tarnslator means adapted for automatic print control of a typewriter having a plurality of key levers, and

(b) a mechanical power drive translator cycle-control clutch which initiates each new translator cycle during which

(1) translator permutation slides are set to permutational positions according to individual ones of the code elements in each of successive multiple-code-element permutation electrical codes supplied to said translator and in which

(2) a plurality of translator seekers test the permutational setting of said slides for individually selecting one of said seekers for power drive actuation of one of said typewriter key levers to print successive alpha-numeric and symbol characters during each of successive translator cycles and at a second cyclic rate higher than a first rate,

(c) electrical storage means for storing during an interval following completion of each translator cycle the permutation code presented during said each translator cycle, and

(d) repeat-character means for coincidence sampling of the code stored by said storage means with a code newly presented to ascertain the identity, or the lack of identity, between the permutation code supplied to said translator in respect each preceding and new translator cycle, and

(1) operative upon each ascertainment of permutation-code identity for controlling said translator cycle-control clutch to delay for a preselected interval the said new translator cycle, and

(2) thereby delay the interepretation and utilization of the said newly presented permutation code by said translator temporarily to reduce the cycle opearting rate of said translator from said second rate to said first rate,

(3) said first rate being determined by said repeat character means and independent of the cycle operating rate of said translator cycle-control clutch, thereby enabling said second rate to be other than an integer multiple of said first rate.

2. A typewriter repeat character delay system according to claim **1**, and including:

(a) cyclic source means for selectively halting said translator at an intermediate position of a cycle of operation of said translator and at a home position marking completion of each cycle of said translator operation, and wherein

(b) said repeat-character means controls said cyclic source means to release said translator past said home position thereof upon each new presentation of a permutation code, and

(1) to release said translator without delay past said intermediate position thereof in the absence of said permutation code identity, and

(2) with preselected delay upon each occurrence of said permutation code identity.

3. A typewriter repeat character delay system according to claim **1** wherein said repeat-character means includes:

(a) time-delay means, and

(b) controls said cycle-control clutch independent of said time-delay means to initiate a new translator cycle without delay in the absence of said permutation code identity, but wherein

(c) said time-delay means controls said cycle-control clutch to initiate a new translator cycle after said preselected interval upon each occurrence of said permutation code identity.

4. A typewriter repeat-character-delay system comprising:

(a) a plurality of individually operable alpha-numeric and symbol type-body supporting members each having a first operating rate to effect type print impressions,

(b) cyclic source means including

source-cycle control means for presenting successive electrical coded signals representing coded alpha-numeric and symbol information items successively presented for printing at a second rate higher than said first operating rate;

(c) cyclic printing means including:

(1) print-cycle control means, and

(2) print control means controlled by said electrical signals for operating said type supporting members to print said information items in succession at said second rate;

(d) means responsive to substantial completion of each operating cycle of said printing means for controlling said source-cycle control means to initiate a further cycle of operation of said source means,

(e) storage means electrically controlled by said source means for storing during an interval following each

print cycle an identification of the coded signals presented during said each print cycle,

(f) means including an electrical condenser responsive to the prevailing coded-signal identification stored by said storage means for respectively producing said suppressing production of an electrical energy pulse upon each condition of identity and lack of identity between the coded signals presented in respect each preceding and new print cycle, and

(g) repeat-character delay means responsive to each said production and suppression of production of said electrical energy pulse for controlling said print-cycle control means respectively to

(1) utilize the newly presented coded signals without delay and

(2) temporarily to delay the utilization thereof by said print control means and thereby permit said printing means to print at said second printing rate in the absence of said coded-signal identity while temporarily reducing said cyclic printing rate to said first rate upon each occurrence of said coded-signal identity,

(3) said first rate being determined by said repeat character means and independent of the cycle operating rate of said translator cycle-control clutch, theretby enabling said second rate to be other than an integer multiple of said first rate.

5. A typewriter repeat-character-delay code translator system comprising:

(a) a plurality of individually operatable alpha-numeric and symbol type-body supporting members each having a first operating rate to effect type print impressions in response to the actuation of an associated typewriter key,

(b) cyclic source means including:

(1) a source-cycle control means for controlling the presentation of successive electrical coded signals, representing coded alpha-numeric and symbol information items to be successively presented for printing, at a second rate higher than said first rate,

(c) cyclic printing means including:

(1) a code translator having a mechanical power drive cycle-control clutch which is controlled by said cyclic source means and initiates each new translator cycle during which

(2) translator permutation slides are set to permutational positions under control of code electromagnets controlled by said electrical coded signals, and in which

(3) a plurality of translator seekers test the permutational setting of said slides for individually selecting one of said seekers for power drive actuation of one of said typewriter key levers to operate said type supporting members and print said information items in succession at said second printing rate,

(d) means responsive to partial completion of a cycle of operation of said translator for controlling said source-cycle control means to initiate a new cycle of operation of said cyclic source means,

(e) electrical storage means electrically controlled by said cyclic source means for storing during an interval following completion of each translator cycle the coded information item presented during said each translator cycle, and

(f) repeat-character means for coincidence sampling of the coded information item stored by said storage means and a coded information item newly presented by said cyclic source means to ascertain the identity, or the lack of identity, between the coded signals presented in respect each preceding and new translator cycle and

(1) operative upon each ascertainment of such identity for controlling said cycle-control clutch and thereby said source-cycle control means temporarily to delay for a preselected interval utilization of the newly presented coded signals by said translator and the presentation of succeeding coded signals by said cyclic source means temporarily to reduce the repetitive operating rates of said translator and said cyclic source means from said second rate to said first rate,

(2) said first rate being determined by said repeat character means and independent of the cycle operating rate of said translator cycle-control clutch, thereby enabling said second rate to be other than an integer multiple of said first rate.

6. A typewriter repeat-character-delay code translator system according to claim 5 wherein said electrical coded signals are comprised by electrical energizations of individual ones of a plurality of code electrical circuits providing permutational combinations of zero and one code bits in successive code-bit groups identifying said successively and cyclically presented coded alpha-numeric and symbol information items.

7. A typewriter repeat-character-delay code translator system according to claim 6 wherein said storage means is comprised by a multi-bit information-item storage register for individually storing the zero and one code bits identifying each information item successively presented for printing.

8. A typewriter repeat-character-delay code translator system according to claim 7 wherein said storage register is comprised by code bit bi-stable storage registers each operable between two states individually identified storage of zero and one code bits.

9. A typewriter repeat-character-delay code translator system according to claim 8 wherein said depeat-character control means includes:

(a) means responsive to the code bits of a code-bit group newly presented to control each print cycle for coincidence sampling thereof with the corresponding code bits of a code-bit group stored by said storage register during the preceding print cycle and for essentially concurrently storing the code bits of the code-bit group newly presented, and further includes

(b) means responsive to each prevailing state of sampled coincidence identity between the code-bit group newly presented for control of each new print cycle and that identified by said storage register as having been presented for control of the immediately preceding print cycle to

(1) utilize without delay the newly presented code-bit group in the absence of said coincidence identity, and

(2) to utilize with delay said newly presented code-bit group upon each occurrence of said coincidence identity and thereby effect said temporary reduction of the repetitive operating rate of said translator from said second rate to said first rate.

10. A typewriter repeat-character-delay code translator system according to claim 8 wherein said repeat-character control means includes.

(a) electrical energy storage means, and

(b) includes means responsive to each group of code bits newly presented to control each new paint cycle for coincidence sampling the operative states of said storage registers so to control energy storage in said energy storage means as to indicate a prevailing state of identity or lack thereof between said newly presented code-bit group and that stored by said storage register, and additionally includes

(c) means controlled by energy storage in said energy storage means indicative of said prevailing code-bit group identity or lack thereof for controlling said translator cycle-control clutch respectively to

(1) delay for said preselected interval, or to

(2) effect without delay, the utilization of said newly presented code-bit group by said translator.

11. A typewriter repeat-character-delay code translator system according to claim **10** wherein

(a) said translator cycle-control clutch is controllable to halt said translator at a cyclic home position marking completion of each cycle of its operation, and

(b) wherein said means controlled by energy storage in said energy storage means controls said translator cycle-control clutch to release said translator

(1) without delay past said home position thereof upon each lack of a prevailing state of identity between said newly presented code-bit group and that stored by said storage register, and

(2) to release said translator with preselected delay past said home position thereof upon each occurrence of said prevailing code-bit group identity.

12. A typewriter repeat-character-delay code translator system according to claim **10** which includes timing means responsive to presentation of each new code-bit group for establishing said preselcted delay interval value for said delayed utilization of said newly presented code-bit group.

13. A typewriter repeat-character-delay code translator system according to claim **12** in which said timing means includes

(a) a monostable multivibrator operative from a first to a second operative state thereof upon said presentation of said each new code-bit group with automatic timed return from said second to said first operative state thereof to establish said preselected delay interval value, and

(b) means responsive to said return of said multivibrator from said second to said first operative state for controlling said translator cycle-control clutch to effect said delayed utilization of said newly presented code-bit group.

14. A typewriter repeat-character-delay code translator system according to claim **7** wherein said storage register is comprised by code bit magnetic storage devices each operable between two magnetic states individually identifying storage of zero and one code bits.

15. A typewriter repeat-character-delay code translator system according to claim **14** wherein said repeat-character means includes

(a) means responsive to each code-bit group newly presented to control each new print cycle for utilizing the one and zero code bits thereof to set corresponding individual ones of said storage devices to or maintain them in a respective first or a second magnetic state, and includes

(b) means responsive to each lack of change of the magnetic states of all of said storage devices upon each new code-bit group presentation for controlling said translator cycle-control means to effect said delayed utilization of said newly presented code-bit group.

16. A typewriter repeat-character-delay code translator system according to claim **14** wherein said repeat-character means includes

(a) means responsive to each code-bit group newly presented to control each new print cycle for

(1) utilizing the one code bits thereof to set corresponding individual ones of said storage devices to or maintain them in one polarity of magnetic saturation, and for

(2) thereafter utilizing the zero code bits of said newly presented code-bit group to set corresponding individual ones of said devices or maintain them in a polarity of magnetic saturation opposite to said one polarity, and includes

(b) means responsive on the one hand to any change of setting of one of said magnetic storage devices between said one and opposite polarities and on the other hand to lack of change of setting of all of said devices for controlling said translator cycle-control clutch respectively to effect non-delayed and delayed utilization of said newly presented code-bit group.

References Cited

UNITED STATES PATENTS

2,700,446	1/1955	Blodgett	197—20
2,869,717	1/1959	Rossetto et al.	199—18
2,873,837	2/1959	Clark	197—20
2,995,231	8/1961	Von Kummer et al.	197—20
3,269,509	8/1966	Smith	197—17 XR
3,342,296	9/1967	Greene	197—20

ROBERT E. PULFREY, *Primary Examiner.*

E. S. BURR, *Assistant Examiner.*