(12) INTERNATIONAL APPLICATION PUBLISHED UNDER THE PATENT COOPERATION TREATY (PCT)

(19) World Intellectual Property Organization
International Bureau

(43) International Publication Date
09 May 2019 (09.05.2019)

WIPO | PCT

(10) International Publication Number
WO 2019/089768 A1

(51) International Patent Classification:
G01N 21/25 (2006.01) *G01N 33/50* (2006.01)
G01N 33/487 (2006.01) *G01N 33/72* (2006.01)
G01N 33/49 (2006.01)

(21) International Application Number:
PCT/US2018/058475

(22) International Filing Date:
31 October 2018 (31.10.2018)

(25) Filing Language: English

(26) Publication Language: English

(30) Priority Data:
62/580,257 01 November 2017 (01.11.2017) US

(71) Applicant: **WILLIAM MARSH RICE UNIVERSITY** [US/US]; 6100 Main St., Houston, TX 77005 (US).

(72) Inventors: **RICHARDS-KORTUM, Rebecca**; c/o Rice University, 6100 Main St., Houston, TX 77005 (US). **SIMERAL, Mathieu**; 6338 Morgan Road, Greenwell Springs, LA 70739 (US). **BOND, Meaghan**; c/o Rice University, 6100 Main St., Houston, TX 77005 (US). **KEAHEY, Pelham**; c/o Rice University, 6100 Main St., Houston, TX 77005 (US). **SCHRODER, Kristofer**; c/o Rice University, 6100 Main St., Houston, TX 77005 (US).

(74) Agent: **SPENCE, Christopher W.**; Parker Highlander PLLC, 1120 S. Capital of Texas Highway, Bldg. One, Suite 200, Austin, TX 78746 (US).

(81) Designated States *(unless otherwise indicated, for every kind of national protection available)*: AE, AG, AL, AM, AO, AT, AU, AZ, BA, BB, BG, BH, BN, BR, BW, BY, BZ, CA, CH, CL, CN, CO, CR, CU, CZ, DE, DJ, DK, DM, DO, DZ, EC, EE, EG, ES, FI, GB, GD, GE, GH, GM, GT, HN, HR, HU, ID, IL, IN, IR, IS, JO, JP, KE, KG, KH, KN, KP, KR, KW, KZ, LA, LC, LK, LR, LS, LU, LY, MA, MD, ME, MG, MK, MN, MW, MX, MY, MZ, NA, NG, NI, NO, NZ, OM, PA, PE, PG, PH, PL, PT, QA, RO, RS, RU, RW, SA, SC, SD, SE, SG, SK, SL, SM, ST, SV, SY, TH, TJ, TM, TN, TR, TT, TZ, UA, UG, US, UZ, VC, VN, ZA, ZM, ZW.

(84) Designated States *(unless otherwise indicated, for every kind of regional protection available)*: ARIPO (BW, GH, GM, KE, LR, LS, MW, MZ, NA, RW, SD, SL, ST, SZ, TZ, UG, ZM, ZW), Eurasian (AM, AZ, BY, KG, KZ, RU, TJ,

(54) Title: LOW RESOURCE DEVICE AND SYSTEM FOR MEASUREMENT OF BILIRUBIN LEVELS

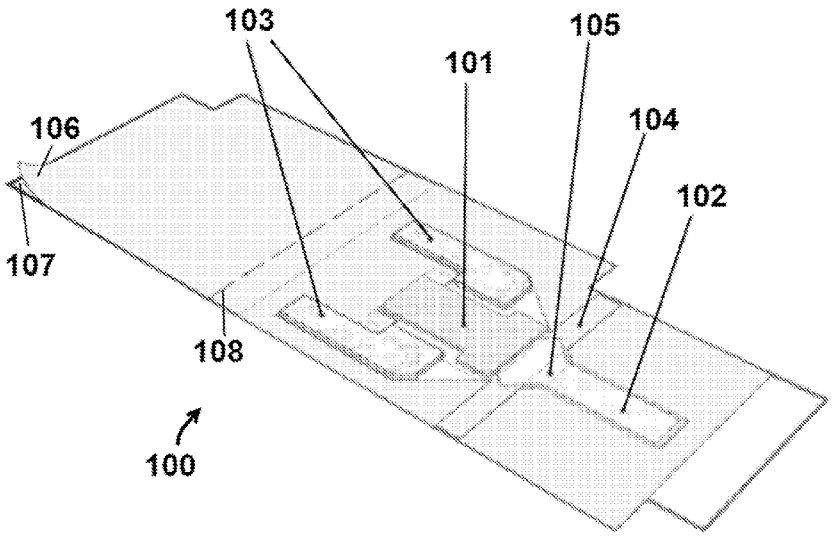

FIG. 1

(57) Abstract: The disclosure describes new devices, systems and method for determining bilirubin samples from a subject. The goal is to quickly and inexpensively diagnose and monitor bilirubin levels without complicated methods or reagents. In particular, the devices, systems and method utilize lateral flow separation of blood components, couple with absorbance- based detection methods, to improve bilirubin measurement in low resource settings.

WO 2019/089768 A1

[Continued on next page]

TM), European (AL, AT, BE, BG, CH, CY, CZ, DE, DK, EE, ES, FI, FR, GB, GR, HR, HU, IE, IS, IT, LT, LU, LV, MC, MK, MT, NL, NO, PL, PT, RO, RS, SE, SI, SK, SM, TR), OAPI (BF, BJ, CF, CG, CI, CM, GA, GN, GQ, GW, KM, ML, MR, NE, SN, TD, TG).

Published:

— *with international search report (Art. 21(3))*

DESCRIPTION

LOW RESOURCE DEVICE AND SYSTEM FOR MEASUREMENT OF BILIRUBIN LEVELS

CROSS-REFERENCE TO RELATED PATENT APPLICATIONS

This application claims priority to U.S. Provisional Patent Application Serial No. 62/580,257 filed November 1, 2017, the entire contents of which are incorporated herein by reference.

BACKGROUND

The invention was made with government support under Grant No. AID-OAA-F-15-00012 awarded by the United States Agency for International Development (USAID). The government has certain rights in the invention.

A. FIELD

This disclosure relates to a device and methods for determining the level of bilirubin and the bilirubin binding status in a blood sample from a patient. More particularly, the invention relates to a device and system for assessing bilirubin levels, as well as methods of using the same.

B. RELATED ART

Bilirubin is processed in our bodies by the enzyme glucuronosyl transferase so that it can be excreted. In about half of all neonates, upregulation of this enzyme is delayed, and bilirubin accumulates to levels that may cause neurological damage, including a condition known as kernicterus. Jaundice is a symptom of bilirubin accumulation. When a jaundiced infant is diagnosed, the baby may be promptly given blue light phototherapy (causing bilirubin to be converted into more excretable forms). The baby typically stays in the hospital until the bilirubin level is deemed safe. The level of bilirubin deemed safe is, in current practice, determined by a complicated set of "rules" that involve several clinical parameters. Particularly in premature infants, these rules often make it difficult to discern whether an infant requires an exchange transfusion, slower acting phototherapy, or has no need for immediate treatment for the jaundice.

With hospitals now sending newborns home within 24 hours, infants may not develop jaundice or other signs of kernicterus until after they are sent home. As such, those infants may not receive the prompt treatment they need, and neurological damage affecting cognitive, auditory and motor skills may result. Thus, there remains a need for an inexpensive, easy-to-use, portable (battery powered) system for the assay of plasma bilirubin and bilirubin binding status at the point-of-care of neonates with hyperbilirubinemia. Ideally, the system would require only small amounts of blood such as can be readily obtained by "heel stick," and require little or no manipulation of the blood specimen. Such a device would greatly benefit patients including the neonate in the intensive care nursery, the neonatal outpatient in developed countries, and the jaundiced neonate in underdeveloped countries.

SUMMARY

Briefly, the present disclosure provides devices, systems and methods to measure bilirubin. Assays can be performed using the devices and systems to provide information about the risk for adverse effects of bilirubin in a subject, such as an infant. Such information has been shown to be useful in managing bilirubin toxicities. Particularly useful are applications of the disclosed technologies that can be employed in low resource settings, such as in the intensive care nurseries, for discharged infants upon return to the outpatient clinic or pediatrician office, and in underdeveloped countries lacking adequate laboratory support.

Certain embodiments include a method of estimating total bilirubin concentration in a neonatal blood or blood product sample comprising: (a) providing a sample separation assembly comprising a first substrate that physically or chemically removes red blood cells from said sample, but preferentially passes at least plasma, serum and bilirubin to a second substrate that is adjacent to said first substrate, wherein said second substrate that supports capillary movement of blood or a blood product; (b) contacting said receiving apparatus with a neonatal blood or blood product sample in a volume of 10 µl to 1 ml; (c) inserting at least a portion of said second substrate into a sample reader that is capable of measuring optical density (OD) of said second substrate at wavelengths including a first wavelength between 420 - 520 nm, a second wavelength between 530 - 600 nm, and a control wavelength, wherein the control wavelength is a wavelength at which neither bilirubin or hemoglobin are absorbed; (d) obtaining OD values of said second substrate at the first wavelength, the second wavelength, and the control wavelength; (e) performing a scaled subtraction of the OD values at the first wavelength *versus* the second wavelength, and the first wavelength *versus* the

control wavelength; and (f) comparing a scaled value at the first wavelength obtained in step (e) with one or more standard values that permit estimation of total bilirubin concentration in said sample.

In particular embodiments the first substrate provides physical removal of red blood cells from said sample, such as by pore size, pore shape or pore charge. In some embodiments the first substrate provides chemical removal of red blood cells from said sample, such as by a coagulant. In specific embodiments the volume of sample is about 40 µl. In certain embodiments the first and second substrates are separated by an air pocket when the sample separation assembly is inserted into the sample reader. In particular embodiments the first and second substrates are in direct contact with each other. Some embodiments further comprise assessing the pH of said sample, and specific embodiments comprise estimating free or total hemoglobin concentration of said sample. In certain embodiments the second substrate is a lateral flow strip, and or the first substrate is a filter pad. Specific embodiments further comprise calibrating said sample reader with optical density calibration standards comprising two or more optical densities from about OD 1.0 to about OD 2.5.

Certain embodiments include a system for estimating neonatal total bilirubin concentration comprising: (a) a sample separation assembly comprising a first substrate that physically or chemically removes red blood cells from a sample, but preferentially passes at least plasma, serum and bilirubin to a second substrate that is adjacent to said first substrate, wherein said secondary substrate that supports capillary movement of blood or a blood product; and (b) a sample reader comprising: (i) at least one light emitting diode (LED) capable of emitting wavelengths including 450 nm $\pm$ 10 nm, 580 nm $\pm$ 10 nm, and 660 nm $\pm$ 30 nm ; (ii) a chamber for receiving said secondary substrate; (iii) at least one optical pathway operably connecting said at least one LED and said chamber, said pathway being defined by one or more contiguous walls, wherein one or more of said contiguous walls comprise one or more apertures; (iv) at least one light detection sensor capable of detecting wavelengths including 450 nm $\pm$ 10 nm, 580 nm $\pm$ 10 nm, and 660 nm $\pm$ 30 nm ; (v) a microprocessor capable of controlling one or more functions in said sample reader; and (vi) a power source operably connected to a power switch.

In particular embodiments the first substrate provides physical removal of red blood cells from said sample, such as by pore size, pore shape or pore charge. In some embodiments the first substrate provides chemical removal of red blood cells from said sample, such as by a coagulant. In specific embodiments the first and second substrates are

separated by an air pocket when the sample separation assembly is inserted into the sample reader. In certain embodiments the first and second substrates are in direct contact with each other. Particular embodiments further comprise a probe that is capable of assessing the pH of a sample on said second substrate. Some embodiments further comprise LED's, sensors and standards capable of estimating free or total hemoglobin concentration of a sample on said second substrate. In specific embodiments the second substrate is a lateral flow strip, and/or wherein said first substrate is a filter pad. In certain embodiments the sample reader further comprises a port that contains an optical density calibration standard. In particular embodiments the at least two ports comprise OD standards of OD 1.5 and OD 2.0, OD 1.5 and OD 2.5, OD 2.0 and OD 2.5, or OD 1.5, OD 2.0 and OD 2.5. In some embodiments the optical pathway is an open air pathway.

Specific embodiments include a sample reader for estimating neonatal total bilirubin concentration comprising: (i) at least one light emitting diode (LED) capable of emitting wavelengths including a first wavelength between 420 - 520 nm, a second wavelength between 530 - 600 nm, and a control wavelength, wherein the control wavelength is a wavelength at which neither bilirubin or hemoglobin are absorbed; (ii) a chamber for receiving a sample substrate; (iii) at least one optical pathway operably connecting said at least one LED and said chamber, said pathway being defined by one or more contiguous walls, wherein one or more of said contiguous walls comprise one or more apertures; (iv) at least one light detection sensor capable of detecting wavelengths including the first wavelength, the second wavelength, and the control wavelength; (v) a microprocessor capable of controlling one or more functions in said sample reader; and (vi) a power source operably connected to a power switch. Certain embodiments further comprise a probe that is capable of assessing the pH of a sample on said sample substrate. Particular embodiments further comprise LED's, sensors and standards capable of estimating free or total hemoglobin concentration of a sample on said sample substrate. Certain embodiments further comprise two or three two ports comprising OD standards of OD 1.5 and OD 2.0, OD 1.5 and OD 2.5, OD 2.0 and OD 2.5, or OD 1.5, OD 2.0 and OD 2.5. In some embodiments the optical pathway is an open air pathway. Specific embodiments further comprise a port that contains an optical density calibration standard.

Any embodiment of any of the present methods, composition, kit, and systems may consist of or consist essentially of—rather than comprise/include/contain/have—the described steps and/or features. Thus, in any of the claims, the term "consisting of" or "consisting essentially of" may be substituted for any of the open-ended linking verbs recited

above, in order to change the scope of a given claim from what it would otherwise be using the open-ended linking verb.

The use of the term "or" in the claims is used to mean "and/or" unless explicitly indicated to refer to alternatives only or the alternatives are mutually exclusive, although the disclosure supports a definition that refers to only alternatives and "and/or."

Throughout this application, the term "about" is used to indicate that a value includes the standard deviation of error for the device or method being employed to determine the value.

Following long-standing patent law, the words "a" and "an," when used in conjunction with the word "comprising" in the claims or specification, denotes one or more, unless specifically noted.

Other objects, features and advantages of the present invention will become apparent from the following detailed description. It should be understood, however, that the detailed description and the specific examples, while indicating certain embodiments of the invention, are given by way of illustration only, since various changes and modifications within the spirit and scope of the invention will become apparent to those skilled in the art from this detailed description.

BRIEF DESCRIPTION OF THE DRAWINGS

The patent or application file may contain at least one drawing executed in color. Copies of this patent or patent application publication with color drawing(s) will be provided by the Office upon request and payment of the necessary fee.

The following drawings form part of the present specification and are included to further demonstrate certain aspects of the present invention. The invention may be better understood by reference to one or more of these drawings in combination with the detailed description of specific embodiments presented herein.

FIG. 1 is a perspective view of a sample separation assembly according to an exemplary embodiment of the present disclosure.

FIG. 2 is a perspective view of the embodiment of FIG. 1 and a sample reader according to an exemplary embodiment of the present disclosure.

FIG. 3 is a top view of the embodiment of FIG. 1 with a sample.

FIG. 4 is a section view of the sample reader of FIG. 2.

FIG. 5 is a perspective view of the sample reader of FIG. 2 during use.

FIG. 6 is graphical data showing laboratory validation of sample separation assembly plasma separation.

FIG. 7 is graphical and photographic data showing evaluation of system performance versus time between sample collection and measurement and for different sample volumes.

FIG. 8 is graphical data showing results from a clinical pilot study.

FIG. 9 is graphical data showing absorbance spectra of increasing bilirubin concentration.

FIG. 10 is graphical data showing absorbance spectra of temporal stability testing.

FIG. 11 is photographic data showing sample separation assembly components and assembly techniques.

FIG. 12 is graphical data showing clinical data compared to Clinical Laboratory Improvement Amendments (CLIA) criteria.

FIG. 13 is graphical data showing calibration data during a clinical study.

DETAILED DESCRIPTION OF THE INVENTION

It has been the trend in developed countries for several years now that apparently healthy neonates, even including moderately low-birth weight babies, are discharged from hospital within a day or two from birth. And unless there is some indication of jaundice, there is often no pre-discharge measurement of blood bilirubin. These neonates are generally followed by means of return visits to an outpatient clinic or by means of a visiting nurse at home. This practice has reduced health care costs because of reduced hospital stay but has complicated the management of jaundice once it appears in the discharged neonate. Unfortunately, there is evidence that concomitant with this early discharge practice there has been an increase in the incidence of kernicterus and neurological sequelae. The system described herein allows for point-of care assays by a visiting nurse at home or by a pediatrician in the outpatient clinic or private office. Eliminating the need for blood drawing in sufficient quantity for transport to the clinical laboratory and time delay in awaiting the results, will both facilitate treatment decisions and minimize time to action if necessary. Given an inexpensive system, this approach could also reduce cost substantially. Moreover, it could also be implemented in under-developed countries where the availability of standard bilirubin assays is limited by the lack of proper testing facilities and/or cost.

Alternatives to the system described herein are the transcutaneous bilirubinometers (reflectance measurements through the skin) and some stat wet chemical bilirubin assays using small instruments. While the transcutaneous bilirubinometers have been found useful for following the trend in bilirubin level they have not been widely accepted because of variability depending on skin color, site of measurement, and operator skill. Also, the instruments and disposables are expensive. The wet chemical methods that work best require separation of the plasma from the blood and are not amenable to visiting nurse or pediatrician desk use. In any event, neither approach can give information regarding bilirubin binding status. Thus, the devices, systems and methods described herein as designed to address these deficiencies and provide an effective, cost-efficient and low cost approach to point-of-care measurement of bilirubin levels. These and other aspects of the disclosure are set forth in greater detail below.

I. Bilirubin

Bilirubin (formerly referred to as hematoidin) is a yellow compound that occurs in the normal catabolic pathway that breaks down heme in vertebrates. This catabolism is a

necessary process in the body's clearance of waste products that arise from the destruction of aged red blood cells. First the hemoglobin gets stripped of the heme molecule which thereafter passes through various processes of porphyrin catabolism, depending on the part of the body in which the breakdown occurs. For example, the molecules excreted in the urine differ from those in the faeces. The production of biliverdin from heme is the first major step in the catabolic pathway, after which the enzyme biliverdin reductase performs the second step, producing bilirubin from biliverdin.

Bilirubin is excreted in bile and urine, and elevated levels may indicate certain diseases. It is responsible for the yellow color of bruises and the yellow discoloration in jaundice. Its subsequent breakdown products, such as stercobilin, cause the brown color of feces. A different breakdown product, urobilin, is the main component of the straw-yellow color in urine.

Bilirubin consists of an open chain of four pyrrole-like rings (tetrapyrrole). In heme, these four rings are connected into a larger ring, called a porphyrin ring. Bilirubin can be "conjugated" with a molecule of glucuronic acid which makes it soluble in water (see below). This is an example of glucuronidation. Bilirubin is very similar to the pigment phycobilin used by certain algae to capture light energy, and to the pigment phytochrome used by plants to sense light. All of these contain an open chain of four pyrrolic rings.

Like these other pigments, some of the double-bonds in bilirubin isomerize when exposed to light. This is used in the phototherapy of jaundiced newborns: the E,Z-isomers of bilirubin formed upon light exposure are more soluble than the unilluminated Z,Z-isomer, as the possibility of intramolecular hydrogen bonding is removed. This allows the excretion of unconjugated bilirubin in bile. The naturally occurring isomer is the Z,Z-isomer.

Bilirubin is created by the activity of biliverdin reductase on biliverdin, a green tetrapyrrolic bile pigment that is also a product of heme catabolism. Bilirubin, when oxidized, reverts to become biliverdin once again. This cycle, in addition to the demonstration of the potent antioxidant activity of bilirubin, has led to the hypothesis that bilirubin's main physiologic role is as a cellular antioxidant.

The measurement of unconjugated bilirubin depends on its reaction with diazosulfanilic acid to create azobilirubin. However, unconjugated bilirubin also reacts slowly with diazosulfanilic acid, so that the measured indirect bilirubin is an underestimate of the true unconjugated concentration. In the liver, bilirubin is conjugated with glucuronic acid by the enzyme glucuronyltransferase, making it soluble in water: the conjugated version is the main form of bilirubin present in the "direct" bilirubin fraction. Much of it goes into the

bile and thus out into the small intestine. Though most bile acid is reabsorbed in the terminal ileum to participate in enterohepatic circulation, conjugated bilirubin is not absorbed and instead passes into the colon.

There, colonic bacteria deconjugate and metabolize the bilirubin into colorless urobilinogen, which can be oxidized to form urobilin and stercobilin. Urobilin is excreted by the kidneys to give urine its yellow color and stercobilin is excreted in the faeces giving stool its characteristic brown color. A trace (~1%) of the urobilinogen is reabsorbed into the enterohepatic circulation to be re-excreted in the bile.

Although the terms direct and indirect bilirubin are used equivalently with conjugated and unconjugated bilirubin, this is not quantitatively correct, because the direct fraction includes both conjugated bilirubin and δ bilirubin (bilirubin covalently bound to albumin, which appears in serum when hepatic excretion of conjugated bilirubin is impaired in patients with hepatobiliary disease). Furthermore, direct bilirubin tends to overestimate conjugated bilirubin levels due to unconjugated bilirubin that has reacted with diazosulfanilic acid, leading to increased azobilirubin levels (and increased direct bilirubin).

Under normal circumstances, a tiny amount of urobilinogen, if any, is excreted in the urine. If the liver's function is impaired or when biliary drainage is blocked, some of the conjugated bilirubin leaks out of the hepatocytes and appears in the urine, turning it dark amber. However, in disorders involving hemolytic anemia, an increased number of red blood cells are broken down, causing an increase in the amount of unconjugated bilirubin in the blood. Because the unconjugated bilirubin is not water-soluble, one will not see an increase in bilirubin in the urine. Because there is no problem with the liver or bile systems, this excess unconjugated bilirubin will go through all of the normal processing mechanisms that occur (*e.g.*, conjugation, excretion in bile, metabolism to urobilinogen, reabsorption) and will show up as an increase in urine urobilinogen. This difference between increased urine bilirubin and increased urine urobilinogen helps to distinguish between various disorders in those systems.

Unconjugated hyperbilirubinaemia in a newborn can lead to accumulation of bilirubin in certain brain regions (particularly the basal nuclei) with consequent irreversible damage to these areas manifesting as various neurological deficits, seizures, abnormal reflexes and eye movements. This type of neurological injury is known as kernicterus. The spectrum of clinical effect is called bilirubin encephalopathy. The neurotoxicity of neonatal hyperbilirubinemia manifests because the blood–brain barrier has yet to develop fully, and bilirubin can freely pass into the brain interstitium, whereas more developed individuals with increased bilirubin in the blood are protected. Aside from specific chronic medical conditions

that may lead to hyperbilirubinaemia, neonates in general are at increased risk since they lack the intestinal bacteria that facilitate the breakdown and excretion of conjugated bilirubin in the feces (this is largely why the feces of a neonate are paler than those of an adult). Instead the conjugated bilirubin is converted back into the unconjugated form by the enzyme β-glucuronidase (in the gut, this enzyme is located in the brush border of the lining intestinal cells) and a large proportion is reabsorbed through the enterohepatic circulation.

Research has indicated that in the absence of liver disease, individuals with high levels of total bilirubin may experience various health benefits exceeding those with lower levels of bilirubin. Studies have found higher levels of bilirubin in elderly individuals are associated with higher functional independence. Studies have also revealed that levels of serum bilirubin are inversely related to risk of certain heart diseases.

Bilirubin is degraded by light. Blood collection tubes containing blood or (especially) serum to be used in bilirubin assays should be protected from illumination. For adults, blood is typically collected by needle from a vein in the arm. In newborns, blood is often collected from a heel stick, a technique that uses a small, sharp blade to cut the skin on the infant's heel and collect a few drops of blood into a small tube. Non-invasive technology is available in some health care facilities that will measure bilirubin by using an instrument placed on the skin (transcutaneous bilirubin meter).

Bilirubin (in blood) is in one of two forms:

Abb.	Name(s)	Water-soluble	Reaction
"BC"	"Conjugated bilirubin"	Yes (bound to glucuronic acid)	Reacts quickly when dyes (diazo reagent) are added to the blood specimen to produce azobilirubin "Direct bilirubin"
"BU"	"Unconjugated bilirubin"	No	Reacts more slowly, still produces azobilirubin, Ethanol makes all bilirubin react promptly, then: indirect bilirubin = total bilirubin – direct bilirubin

Conjugated bilirubin is often incorrectly called "direct bilirubin" and unconjugated bilirubin is incorrectly called "indirect bilirubin." Direct and indirect refer solely to how compounds are measured or detected in solution. Direct bilirubin is any form of bilirubin which is water-soluble and is available in solution to react with assay reagents; direct bilirubin is often made up largely of conjugated bilirubin, but some unconjugated bilirubin (up to 25%) can still be part of the "direct" bilirubin fraction. Likewise, not all conjugated bilirubin is readily available in solution for reaction or detection (for example, if it is hydrogen bonding with itself) and therefore would not be included in the direct bilirubin fraction.

Total bilirubin (TBIL) measures both BU and BC. Total bilirubin assays work by using surfactants and accelerators (like caffeine) to bring all of the different bilirubin forms into solution where they can react with assay reagents. Total and direct bilirubin levels can be measured from the blood, but indirect bilirubin is calculated from the total and direct bilirubin. Indirect bilirubin is fat-soluble and direct bilirubin is water-soluble.

Originally, the Van den Bergh reaction was used for a qualitative estimate of bilirubin.

This test is performed routinely in most medical laboratories and can be measured by a variety of methods. Total bilirubin is now often measured by the 2,5-dichlorophenyldiazonium (DPD) method, and direct bilirubin is often measured by the method of Jendrassik and Grof.

The bilirubin level found in the body reflects the balance between production and excretion. Blood test results should always be interpreted using the reference range provided by the laboratory that performed the test, but typically 0.3 to 1.9 mg/dL for adults and 340 µmol/L for new borns:

Normal serum bilirubin level = 0.1-1 mg/dl

Unconjugated bilirubin level = 0.2-0.7 mg/dl

Conjugated bilirubin level = 0-0.2 mg/dl

	µmol/l = micromole/liter	mg/dl = milligram/deciliter
total bilirubin	<21	<1.23
direct bilirubin	1.0–5.1	0–0.3 0.1–0.43

Hyperbilirubinemia is a higher-than-normal level of bilirubin in the blood. For adults, this is any level above 170 µmol/l and for newborns 340 µmol/l and critical hyperbilirubinemia 425 µmol/l.

Mild rises in bilirubin may be caused by:

- Hemolysis or increased breakdown of red blood cells
- Gilbert's syndrome – a genetic disorder of bilirubin metabolism that can result in mild jaundice, found in about 5% of the population
- Rotor syndrome: non-itching jaundice, with rise of bilirubin in the patient's serum, mainly of the conjugated type

Moderate rise in bilirubin may be caused by:

- Pharmaceutical drugs (especially antipsychotic, some sex hormones, and a wide range of other drugs)
- Sulfonamides are contraindicated in infants less than 2 months old (exception when used with pyrimethamine in treating toxoplasmosis) as they increase unconjugated bilirubin leading to kernicterus.
- Hepatitis (levels may be moderate or high)
- Chemotherapy
- Biliary stricture (benign or malignant)

Very high levels of bilirubin may be caused by:

- Neonatal hyperbilirubinaemia, where the newborn's liver is not able to properly process the bilirubin causing jaundice
- Unusually large bile duct obstruction, *e.g.*, stone in common bile duct, tumour obstructing common bile duct, *etc.*
- Severe liver failure with cirrhosis (*e.g.*, primary biliary cirrhosis)
- Crigler–Najjar syndrome
- Dubin–Johnson syndrome
- Choledocholithiasis (chronic or acute).

Cirrhosis may cause normal, moderately high or high levels of bilirubin, depending on exact features of the cirrhosis.

To further elucidate the causes of jaundice or increased bilirubin, it is usually simpler to look at other liver function tests (especially the enzymes alanine transaminase, aspartate transaminase, gamma-glutamyl transpeptidase, alkaline phosphatase), blood film examination (hemolysis, etc.) or evidence of infective hepatitis (e.g., hepatitis A, B, C, delta, E, etc.).

Jaundice may be noticeable in the sclera of the eyes at levels of about 2 to 3 mg/dl (34 to 51 μmol/l), and in the skin at higher levels. For conversion, 1 mg/dl = 17.1 μmol/l. Jaundice is classified, depending upon whether the bilirubin is free or conjugated to glucuronic acid, into conjugated jaundice or unconjugated jaundice.

II. Samples

A first step in the methods described herein will be the obtaining of a blood sample. Since only a small amount of sample is required to perform the assay, obtaining the blood sample does not require venous blood draw, but can be obtained from skin (finger, heel) pricks and use of a device such as a capillary tube. Alternatively, it is possible to directly

transfer the blood sample to a sample pad (discussed further below) that is or can be attached to a lateral flow strip (also discussed below).

While not required, certain pre-processing steps may be applied to the sample prior to introduction on the sample pad and/or lateral flow strip.

III. Lateral Flow Assays

In general, the present devices and methods rely on the use of lateral flow technologies to achieve separation of blood analytes. Lateral flow tests, also known as lateral flow chromatographic assays, are simple devices intended to detect the presence (or absence) of a target analyte in sample (matrix) without the need for specialized and costly equipment, though many lab based applications exist that are supported by reading equipment. Typically, these tests are used for medical diagnostics either for home testing, point-of-care testing, or laboratory use. A widespread and well known application is the home pregnancy test. Lateral flow tests can operate as either immunologic or non-immunologic assays. Detection may vary depending on the application, such as chromatographic detection or light absorbance/transmission.

The technology is based on a series of capillary beds, such as pieces of porous paper, microstructured polymer, or sintered polymer. Each of these elements has the capacity to transport fluid (*e.g.*, blood, serum, *etc.*) spontaneously, and in so doing, provide for separation of the components of the fluid.

The first element (the sample pad) acts as a sponge and holds an excess of sample fluid. Once soaked, the fluid migrates to the second element (separation pad). The sample fluid begins to move through the porous structure of the second element in a lateral fashion. In this way, molecules having different properties move a different speeds, thereby separation the molecules spatially along the path of migration. After passing across the length of the second element, fluid may enter a final porous material, referred to as a wick, which acts as a waste container. In the absence of a wick, the fluid will reach the end of the second element and stop, acting as a "lock" for further migration.

Most tests are intended to operate on a purely qualitative basis. However it is possible to measure the intensity of the test line to determine the quantity of analyte in the sample. Handheld diagnostic devices known as lateral flow readers are used by several companies to provide a fully quantitative assay result. By utilizing unique wavelengths of light for illumination in conjunction with either CMOS or CCD detection technology, a signal rich image can be produced of the actual test lines. Using image processing algorithms

specifically designed for a particular test type and medium, line intensities can then be correlated with analyte concentrations. One such handheld lateral flow device platform is made by Detekt Biomedical L.L.C. Alternative non-optical techniques are also able to report quantitative assays results. One such example is a magnetic immunoassay (MIA) in the lateral flow test form also allows for getting a quantified result. Reducing variations in the capillary pumping of the sample fluid is another approach to move from qualitative to quantitative results. Recent work has, for example, demonstrated capillary pumping with a constant flow rate independent from the liquid viscosity.

IV. Device

Embodiments of the present device concept include a low-cost, battery-powered reader designed to immediately quantify serum bilirubin levels from a small drop of whole blood applied to a lateral flow strip. Applicants have designated this device "a Bilispec device." In one embodiment, the device has two main components: (1) a port for receiving a lateral-flow strip onto which the clinician delivers a drop of whole blood, such as from a heel prick of an infant, and (2) a battery powered light source and light sensor that permits measurement of light transmitted through the serum on the lateral flow strip. A particular embodiment provides for a digital reporting of the bilirubin concentration based on these parameters. Preliminary data indicate that results can be available within 30 seconds.

In one specific embodiment, a prototype reader measures the absorbance of the target area at three wavelengths using LEDs with peak wavelengths at 450 nm, 580 nm, and 660 nm. These wavelengths are used to measure the absorbance of light due to bilirubin, hemoglobin, and background respectively. Different wavelengths and light sources may be used (laser, lamp, *etc.*). Free hemoglobin in the plasma is measured to account for any hemolysis that might have occurred during blood collection. Measuring free hemoglobin on paper is distinct from blood hemoglobin (Bond *et al.* (2)) because it requires plasma separation to measure. Light from the LEDs/light source passes through the sample (paper strip) and is measured by a photodiode. A second photodiode may be placed near the light source as a reference detector to record the amount of light being produced by the light source before the light passes through the sample. This information is used to compute the ratio of light incident on the sample versus transmitted light. This reference detector is used to account for any power variation in the source(s). Apertures may be placed along the optical pathway to reduce the amount of scattered light entering the sample detector produced by either the optical housing or sample.

An algorithm is used to compute the bilirubin concentration using the three values obtain from measuring transmitted light through the sample. Initially, the inventors simply took a subtraction of the three values to obtain a final optical density related to bilirubin by:

$$A_TSB=A_Bil-A_Hb-A_B$$

where ATSB, ABil, AHb, AB is the final absorbance due to bilirubin, absorbance primarily due to bilirubin measured at 450nm, absorbance measured due to hemoglobin at 580 nm, and background measured at 660 nm respectively. However, hemoglobin absorbance is not the same at 450 nm as it is at 580 nm (different extinction coefficient), so a scaled subtraction should be taken to account for the difference.

$$A_TSB=(A_Bil-A_B)-((A_HB-A_B)*m+b)$$

where m is the slope of the relationship between absorbance due to hemoglobin measured at 580nm and 450 nm and b is a linear offset. The relationship between hemoglobin concentration measured at 450 and 580 nm was found by measuring increasing hemoglobin concentration in both channels and determining the linear fit between them on the lateral flow cards (nitrocellulose). This relationship (values of m and b) will be different depending on the optical and electrical response of the system used to measure the sample. It is also possible the paper will not have an equal absorbance at 660 nm and 450 nm, so a scaled subtraction can be performed for this as well.

In a current embodiment, to calibrate the reader, three calibration cards containing neutral density filters (1.5, 2.0, and 2.5 OD) are inserted into the reader and measured. These cards are stored in the side of the reader. Different OD values can be used and fewer or more calibration cards could be used. The reader can automatically detect which calibration card has been inserted using the card sensor, so the cards can be inserted in any order. It can also tell the difference between a sample card and a calibration card. This is done by measuring reflected light off of the sample card to determine what has been inserted. Once all three calibration cards have been measured, the user measures a dry lateral flow card (*i.e.*, blank sample) to complete calibration. The reader is controlled by a microcontroller (Microchip, ATmega3290A) located on a custom printed circuit board designed to the power electronics and display. Code is written using Arduino (IDE using C and C++). In a particular embodiment, the reader is powered by two rechargeable AA batteries and the system is operated by a power on/off switch and a button on the front of the reader.

Referring now to FIGS. 1-2, an exemplary embodiment of a system according to the present disclosure includes a sample separation assembly 100 and a sample reader 200. Sample separation assembly 100 comprises a first substrate 101 and a second substrate 102.

During use, a sample 110 is placed on first substrate 101 and a portion of sample 110 is transported via capillary movement to secondary substrate 102. In this embodiment, sample 110 is a neonatal blood or blood product sample. First substrate 101 is configured to physically or chemically remove red blood cells from sample 110 and preferentially pass at least plasma, serum and bilirubin to second substrate 102. In certain embodiments, substrate 101 may be a glass fiber plasma separation membrane which traps red blood cells, allowing plasma to flow out along substrate 102, which may be a the nitrocellulose strip

Excess amounts of sample 110 are directed to overflow channels 103, so a precise volume of sample 110 is not necessary. In particular embodiments, sample 110 may have a volume of 10 µl to 1 ml, and in particular embodiments sample 110 may be 40 µl or more. Substrate 102 can include a strip 104 (*e.g.* an acetate strip or nitrocellulose strip) that extends across sample separation assembly 100, and a sealing portion 105 seals a portion of sample 110 on second substrate 102.

Protective layer 106 can be removed to expose adhesive layer 107, and sample separation assembly 100 can then be folded along line 108. In exemplary embodiments, sealing portion 105 may be a raised portion that extends around a portion of second substrate 102. Adhesive layer 107 can thereby contact sealing portion 105 and allow an air barrier between adhesive layer 107 and the portion of second substrate that contains the portion of sample 110 that will be analyzed. Such a configuration can minimize an interference in the flow of sample 110 to second substrate 102 by adhesive layer 107, while protecting sample 110 and second substrate 102 from the outside environment.

Sample separation assembly 100 can then inserted into a sample reader 200 to estimate bilirubin concentration in sample 110 as shown in FIG. 2. As explained in further detail below, sample reader 200 can be used to obtain optical density (OD) readings of second substrate 102 to estimate the bilirubin concentration in sample 110. For example, sample reader 200 can measure the OD of second substrate 102 at different wavelengths and compare the OD readings to estimate the bilirubin concentration. In a particular embodiment, sample reader 200 can obtain OD values of second substrate 102 at the three different wavelengths. The first wavelength can be a wavelength in which bilirubin is primarily absorbed (e.g. 420 - 520 nm), while the second wavelength can be a wavelength in which hemoglobin is primarily absorbed (e.g. 530 - 600 nm). The third wavelength can be a control wavelength at which neither bilirubin or hemoglobin are significantly absorbed (*e.g.* greater than 600 nm).

Because hemoglobin is also secondarily absorbed in the first wavelength, it is necessary to account for the light absorbance due to hemoglobin at the first wavelength in order to determine the light absorbance due to bilirubin. Accordingly, sample reader 200 can perform a scaled subtraction of the values at the first wavelength versus the second wavelength, and at the second wavelength versus the third wavelength. Sample reader 200 can then compare a scaled value at the first wavelength with one or more standard values that permit estimation of total bilirubin concentration in sample 110.

As shown in FIG. 3, the optical density of the portion of the sample that is preferentially passed to second substrate 102 is different for normal whole blood and plasma as compared to jaundiced whole blood and plasma. In the jaundiced sample shown at the bottom of FIG. 3, the portion of the sample that is passed to second substrate 102 is yellowish in color. In contrast, the normal sample at the top of FIG. 3 has relatively clear sample portion that is preferentially passed to second substrate 102. Accordingly, the jaundiced sample will have a higher OD value than the normal sample.

Referring now to FIG. 4, a section view of sample reader 200 reveals a plurality of light sources configured as light emitting diodes (LEDs) 201, 202 and 203. It is understood that other embodiments may comprise a different number of light sources, including for example a single light source that is capable of emitting light at different wavelengths. In addition, sample reader 200 comprises a chamber 210 configured to receive second substrate 102 of sample separation assembly 100. Sample reader 200 also includes an optical pathway 220 operably connecting chamber 210 and LEDs 201, 202 and 203. In the embodiment shown, optical pathway 220 is an open air pathway. Sample reader further comprises a power switch 235 operably connected to a power source 236. In certain embodiments, power source 236 may be a replaceable and/or rechargeable battery. Sample reader 200 further comprises a microprocessor 260 configured to control the functional aspects of sample reader 200.

Chamber 210 further comprises a plurality of contiguous walls 211, 212 and 213. Walls 211, 212 and 213 each comprise an aperture 221, 222 and 223, respectively. As explained in more detail below, the amount of light detected by light detection sensor 230 at the different wavelengths emitted by LEDs 201, 202 and 203 can be used to estimate the amount of bilirubin in sample 110. In addition, sample reader 200 may comprise a probe 217 that is capable of assessing the pH of a sample on second substrate 102. The pH of the sample can be used to detect other conditions, including for example, asphyxia. The pH of

the sample may also be determined via optical density (OD) measurements in some embodiments.

In certain embodiments, one or more OD calibration standards (*e.g.* neutral density filters) can be used to calibrate sample reader 200. In the embodiment shown in FIG. 5, an OD calibration standard 225 can be configured to be inserted into an opening 215. Power switch 235 can be operated to turn sample reader 200 on, and a test button 245 can be used to operate sample reader 200 (*e.g.* cause LEDs 201, 202 and 203 to emit light and light detection sensor 230 to detect light).

In particular embodiments, OD standards of 1.5, 2.0, and 2.5 can be used to calibrate sample reader 200 by comparing the amount of light detected by light detection sensor 230 and a reference detector 240. Reference detector 240 can be used to detect the amount of light emitted from LEDs 201, 202 and 203 before the emitted light passes through the OD calibration standards. In certain embodiments, OD calibration standards can be stored in one or more ports 228. In other embodiments, sample reader 200 may comprise an integral wheel (not shown) that can be rotated to place different OD calibration standards in the optical pathway 220 between LEDs 201, 202 and 203 and light detection sensor 230. A graphic display 255 can indicate to the user the device status (*e.g.* the calibration is complete, followed by a prompt to insert sample separation assembly 100 for analysis).

A folded sample separation assembly 100 can then be inserted into opening 215 for analysis of sample 110. With sample separation assembly 100 inserted, second substrate 102 is placed in optical pathway 220 so that light emitted from LEDs 201, 202 and 203 passes through second substrate 102 and is detected by light detection sensor 230. The amount of light from LED 201 detected by sensor 230 is reduced primarily due to the absorbance of bilirubin (and secondarily due to the absorbance of hemoglobin) at the wavelength emitted by LED 201. The amount of light from LED 202 detected by sensor 230 is reduced primarily due to the absorbance of hemoglobin at the wavelength emitted by LED 202. LED 203 emits light at a wavelength that is not significantly absorbed by either bilirubin or hemoglobin.

Sample reader 200 can estimate the amount of bilirubin in sample 10 by comparing the amount of light detected by light detection sensor 230 at the three different wavelengths emitted by LEDs 201, 202 and 203. In general terms, the lower the amount of light detected at the frequency emitted by LED 201 will indicate a higher concentration of bilirubin in sample 110. As previously explained, hemoglobin absorbance is not the same at the different wavelengths emitted by the LEDs (due to a different extinction coefficient), so a scaled subtraction should be taken to account for the difference. Further description and explanation

of the operating principles can also be found in the discussion of the example and results that follow.

V. Examples

The following examples are included to demonstrate preferred embodiments of the disclosure. It should be appreciated by those of skill in the art that the techniques disclosed in the examples which follow represent techniques discovered by the inventor to function well in the practice of the disclosure, and thus can be considered to constitute preferred modes for its practice. However, those of skill in the art should, in light of the present disclosure, appreciate that many changes can be made in the specific embodiments which are disclosed and still obtain a like or similar result without departing from the spirit and scope of the disclosure.

Design of Lateral Flow Cards and Reader

The lateral flow cards (also referred to herein as a sample separation assembly) are designed to accept drops of whole blood obtained directly from a heel or finger prick, separate plasma from whole blood within 1-2 minutes, and preserve the sample so that bilirubin concentration remains constant over time. As shown in FIGS. 1-3, the blood collection pad is a glass fiber plasma separation membrane which traps red blood cells, allowing plasma to flow out along the nitrocellulose strip. The hemoglobin containing red blood cells must be separated from the plasma, because hemoglobin has a strong Soret band absorption peak at 420 nm which overlaps with the bilirubin absorption peak at 460 nm. The lateral flow cards are designed to be operated by visual cues alone. Users are instructed to visually fill the blood collection pad, seal the device, and then insert the device into the reader once the plasma has reached the end of the nitrocellulose strip. The blood collection pad is sized to appear visually full following application of 40-50 μL of blood (typically 2-3 drops of blood). The target window (Fig. 1A) consists of a clear piece of acetate covering the area illuminated in the reader to measure plasma absorbance, preventing exposure to the air and reducing drying after sample collection. The target window is made from acetate not coated with adhesive so as to avoid interference of glue with flow of plasma along the strip. The leak proofing bar and overflow channels are designed to prevent excess blood from leaking into the target area from a saturated collection pad or out of the lateral flow card if the card is squeezed or overfilled. After the blood collection pad has been visibly filled, the device can

be immediately sealed. Separation of plasma takes approximately 1-2 minutes. When the plasma reaches the end of the nitrocellulose strip, the card can be inserted into the reader and analyzed, as shown in FIG. 2. Representative photographs of lateral flow cards spotted with blood containing normal or elevated TSB levels ready to be measured are shown in FIG. 3. The reader is a hand-held battery-powered device that measures absorbance of the separated plasma samples on the lateral flow cards as shown in FIG. 5. Within the reader, three LEDs with center peak wavelengths of 470 nm (blue), 590 nm (amber), and 660 nm (red) are used in sequence to measure absorbance of bilirubin, free hemoglobin, and background absorbance of the card respectively, as shown in FIG. 4. Light intensity values are recorded by the sample and reference photodiode detectors. The reference detector, placed near the LEDs, is used to record the amount of incident light on the sample. The sample detector measures the amount of light transmitted through the sample. The device is calibrated by measuring signal from three neutral density filters, allowing conversion of the raw intensity values into an optical density. Total bilirubin concentration is then calculated by subtracting the optical density measured in the hemoglobin (amber) and background (red) channels from that measured in the bilirubin (blue) channel.

Laboratory Validation of Lateral Flow Cards

To simulate hyperbilirubinemia in the laboratory, whole blood from normal adult volunteers was spiked with varying concentrations of bilirubin (materials and methods). Prepared samples were gently mixed and blood was pipetted onto the collection pads until visually filled. The remaining sample was centrifuged to separate plasma, and the TSB was measured by a laboratory reference standard using the direct Spectrophotometric method for measuring total bilirubin (UNISTAT, Reichert Technologies, Depew, NY). The UNISTAT has been shown to have strong correlation with diazo measurement of TSB with a mean difference of -0.37 mg/dL and mean absolute difference of 0.60 mg/dL (13). After spotting blood on the collection pad, the lateral flow cards were allowed to flow for two minutes and then absorbance was measured using a laboratory spectrometer (Cary 5000 UV-VIS, Agilient, Santa Clara CA). Absorption values at 460 nm, 532 nm, and 656 nm were recorded for each concentration corresponding to bilirubin, hemoglobin, and background respectively. Each concentration of total bilirubin was run in triplicate, and concentrations ranged from 0.0 to 36.3 mg/dL. As bilirubin concentration increased, measured spectra showed increasing absorbance in the blue with little to no change in absorption due to hemoglobin, as shown in FIG. 9. Good agreement was observed between the laboratory standard bilirubinometer and absorbance measured from the lateral flow card using the spectrometer, as shown in FIG. 6,

panel A. Leave-one-out cross validation analysis was used to estimate the correlation (Pearson's coefficient r = 0.996) between absorbance measured using the spectrometer and laboratory standard. Passing-Bablok regression analysis (n = 27) showed a slope value of 1.0013 with a confidence interval (CI) of 0.9664 to 1.0238 and an intercept of 0.0397 with a 95% CI of -0.169 to 0.5522. There was no significant deviation from linearity (p = 0.86) using a cusum test for linearity. Bland-Altman analysis showed no significant mean bias with a standard deviation of 1.0 mg/dL from the laboratory reference and a 95% confidence interval of -1.9 to 2.0 mg/dL, as shown in FIG. 6, panel B. All samples measured using the lateral flow cards and spectrometer were within 3.0 mg/dL of the reference measurement, as shown in FIG. 6, panel C.

The inventors next evaluated temporal variations in absorbance measurements of the lateral flow cards over time, comparing temporal stability of measurements made from cards with the window removed and the strip exposed directly to air to ones with an intact window, as shown in FIG. 7, panel A. Blood was applied to the card and each sample was allowed to separate for two minutes and then measured every two minutes for thirty minutes. The full data set from Figure 1 was used as a training set to calculate the concentration of bilirubin measured over time and each concentration was measured in triplicate. Over the 30 minute period, the apparent concentration of TSB measured in cards without a window changed by 4.5 ± 0.3 mg/dL (9.0 to 13.5 mg/dL). In contrast, TSB levels measured in cards with intact windows remained stable at 9.7 ± 0.1 mg/dL over the measured absorbance spectra changed dramatically over time, while remaining constant in cards with intact window (FIG. 10, panels A and B). At longer intervals in normally constructed cards with intact windows, apparent concentration change by 0.3 ± 0.1mg/dL (12.0 to 12.3 mg/dL) at 1 hour and 1.2 0.1 mg/dL (12.0 to 13.2 mg/dL) at 2 hours (FIG. 10, panel C).

The inventors further assessed temporal variations in measured TSB concentration using spiked samples corresponding to clinically low, medium, and high concentrations of bilirubin in normally constructed cards with a target window. The spectra again showed minimal change over 30 minutes (FIG. 10, panel D). Over 30 minutes, the lowest concentration averaged 6.5 ± 0.5 mg/dL, the middle concentration averaged 11.6 ± 0.3 mg/dL, and highest averaged 21.6 ± 0.2 mg/dL as shown in FIG. 7, panel B.

The inventors then assessed whether variations in the volume of blood applied to the card affected accuracy of TSB measurement (FIG. 7, panel C). Lateral flow cards were measured using the spectrometer in triplicate at three different concentrations measure by the laboratory reference of TSB: 6.0 ± 0.1 mg/dL, 11.9 ±0.2 mg/dL, and 21.3 ± 1.0 mg/dL at

input volumes of blood ranging from 20 μL to 80 μL. The smallest volumes (20 μL and 30 μL) are below the threshold to visibly fill the blood collection pad. The higher volumes of blood visibly fill the collection pad while excess blood fills begins to fill the overflow channels (FIG. 7, panels D-J). At 20 μL, well below the threshold required to visually fill the collection pads, plasma did not reach the target area, so no absorbance was measured due to bilirubin. At 30 μL, pads were under filled, but plasma still reached the target area. The mean absolute deviation from the laboratory standard at 30 μL of blood volume over the three concentrations was 1.4 ± 1.7 mg/dL. At volumes where the pad appears visually filled (*e.g.* at least 40 μL), the mean absolute deviation was lower at 0.8 ± 0.8 mg/dL.

Profile of Queen Elizabeth Central Hospital BiliSpec Clinical Study		
Number of Patients	68	
Number of Samples (n)	94	
Median age at sample (days)	3.5 (range: 0 – 24)	
Median birth weight (kg)	2.3 (range: 0.9 – 3.8)	
Percent Male	58%	
Bilirubin Measurements	Gold Standard (mg/dL)	BiliSpec (mg/dL)
Average (± SD)	10.6 ± 4	10.8 ± 3.7
Minimum Recorded TSB	1.1	1.2
Maximum Recorded TSB	23.0	21.9

Table 1. Pilot Clinical Study at Queen Elizabeth Central Hospital.

Clinical Results

To evaluate the performance and usability of the BiliSpec system in a low-resource setting, the inventors measured bilirubin levels in neonates at risk for jaundice at Queen Elizabeth Central Hospital in Blantyre, Malawi. The study was approved by the IRB at Rice University and by the University of Malawi College of Medicine Research and Ethics Committee. Heelprick blood samples were collected from 68 patients (Table 1). One patient was removed from the study due to a congenital condition which can cause hemolysis. In total 94 samples were collected. A trained nurse performed heelpricks and collected blood directly onto the blood collection pads until they were visually filled. Cards were then measured by the BiliSpec reader. After the collection pad was filled, the nurse collected additional drops of blood into a tube. Collected blood was centrifuged (2,000 g, 5 minutes, Galaxy MiniStar, VWR, Radnor, PA) and plasma was then pipetted out of the sample and measured using the UNISTAT bilirubinometer laboratory reference standard described earlier (13).

The average TSB of the 94 collected samples was 10.6 ±4.0 mg/dL as measured by the reference standard (range 1.1– 23.0 mg/dL). The data measured using the BiliSpec device was divided into a training and test set. To create the training set, samples were ordered from lowest to highest value of TSB, as measured by the reference standard, and every third sample was selected to be in the training set (n = 31); this process ensured that data in the training set spanned the entire range of bilirubin levels while avoiding possible selection bias. The remaining samples (n = 63) were used as a test set. Excellent agreement was observed in the test set between TSB levels measured with BiliSpec and the reference standard, with a Pearson's correlation coefficient of r = 0.973, as shown in FIG. 8, panel A. Passing-Bablok regression analysis showed a slope value of 0.8684 with a CI of 0.8166 to 0.9385 and an intercept of 1.6355 with a 95% CI of 0.9338 to 2.2012. There was no significant deviation from linearity (p = 0.8). Bland-Altman analysis showed a mean bias of 0.3 mg/dL with a standard deviation of 1.0 mg/dL with a 95% confidence interval of -1.7 to 2.2 mg/dL (FIG. 6, panel B). All samples measured by BiliSpec were within 3.0 mg/dL of the laboratory standard (FIG. 8, panel C).

Discussion

This study evaluated the ability of BiliSpec, a system consisting of a disposable lateral flow card and a hand-held reader, to measure and display total serum bilirubin concentration at the bedside in a low-resource setting. BiliSpec was designed to be used with minimal training, to be affordable, and to be accurate compared to currently available methods for measuring TSB.

The system is designed to be used at the bedside by collecting drops of blood from a heelprick directly onto the disposable card. To optimize the disposable card, the inventors evaluated its performance using 50 μL volume of blood; this value was chosen for several reasons. First, 50 μL is a common target volume used in dried blood spot cards for HIV testing, a blood collection method familiar to many healthcare workers in low-resource settings (14). Additionally, previous work suggests that using smaller volumes of blood can lead to drop-to-drop variations in analyte concentration (15). Using this larger volume of blood helps reduce potential sample variability. However, it is impractical for users to precisely control the volume of blood applied directly from a heelprick at the bedside. To allow collection in this way, the inventors designed the cards so that a consistent amount of plasma containing bilirubin is delivered to the target area for measurement, independent of the input volume.

To ensure that samples did not have to be measured at a precise time, the lateral flow cards were designed to maintain temporal stability for at least 30 minutes, ample time for a clinician to measure the sample after collection at the bedside. These properties allow the device to be operated based solely on visual cues without the need for precise volume measurement or timing. The clinician only needs to visibly fill the pad and wait for the plasma to reach the end of the nitrocellulose before measuring.

The reader was also designed to require as little user interaction as possible. The reader detects automatically if a calibration card or sample has been inserted and responds appropriately. The reader requires only a power on/off switch and a single button for operation. The calibration cards are housed inside the reader. The calibration process require only 2-3 minutes to complete and was performed once per-day during the clinical study.

The BiliSpec lateral flow cards and reader are designed to facilitate an extremely low per-test cost. The lateral flow cards have a $0.05 material cost when manufactured at low volumes in the inventors' laboratory and do not appear to require individual packaging for short-term storage. The cards and reader were stored in a room without air conditioning and out of direct sunlight during the humid and hot rainy season in Malawi for 5 weeks without notable degradation in performance. Materials for the lateral flow card were cut using a laser cutter and then assembled by hand (as shown in FIG. 11) and could be produced and assembled locally in a low-resource setting. For reference, lancets and alcohol pads for performing heelpricks cost approximately $0.10 and $0.08 respectively (16). The molded plastic housing and PCBs were the most expensive pieces of the reader for a single prototype. Costs for housing and PCBs are greatly reduced when scaling to larger production runs by using injection molding and bulk PCB orders. The inventors estimate the total cost of the reader will be approximately $150 at low production volumes.

The inventors' pilot clinical study was performed at Queen Elizabeth Central Hospital in Blantyre, Malawi. The inventors brought the same laboratory standard used during the laboratory validation to Blantyre to analyze clinical samples from neonates at risk for jaundice. A nurse collected the heelprick samples which were then analyzed by the reader and the laboratory standard. The instructions for operating BiliSpec were simply to visually fill the blood collection pad, wait for the plasma to reach the end of the lateral flow strip, seal, and measure with the reader.

The sample-to-answer time was approximately 2 minutes. The total bilirubin concentration measured by BiliSpec during the clinical study correlated well with that measured using the reference standard; 90% of samples evaluated were within 2 mg/dL of the

reference standard. As shown in FIG. 12, 95% of measured samples fell within the CLIA (Clinical Laboratory Improvement Amendments) guidelines (±20% or 0.4 mg/dL whichever is greater), suggesting that with some small improvements BiliSpec could meet CLIA regulations.

Results show that BiliSpec outperforms transcutaneous measurement of bilirubin in comparison to other studies conducted in African neonates. In our study, the 95% CI for BiliSpec was -1.7 to 2.2 mg/dL; in contrast, a recent study evaluated the performance of two different transcutaneous systems in 1553 neonates and found 95% CI of -0.7 to 6.7 and -2.2 to 4.8 mg/dL (8). More recently, an alternative low-cost device has been described to measure TSB. However, evaluation shows the device has a 95% CI of -5.8 to 3.3 mg/dL relative to a laboratory reference standard; less accurate than many studies of transcutaneous measurement of TSB (17). Moreover, this system requires metered blood collection, measurement of the sample immediately, and recalibration between each sample (18, 19). Based on the inventors' preliminary clinical results, BiliSpec has improved accuracy while requiring fewer user steps and disposables.

While results are promising, the inventors' study does have some limitations. In this pilot study, the inventors did not encounter any cases of extremely severe jaundice (TSB greater than or equal to 25 mg/dL). Therefore, further clinical testing is needed to assess clinical accuracy at high levels of total bilirubin. The clinical pilot study was performed over the course of 5 weeks and the reader and lateral flow cards functioned properly over the course of the study. However, further evaluation is needed to assess long term storage needs. Calibration during our clinical study was performed once per day. Calibration over the clinical study remained stable (see FIG. 13) and the inventors believe that in the future they can decrease the frequency at which calibration must be performed. However, more testing is still needed in a variety of environmental conditions. Additionally, BiliSpec, like spectrophotometric and transcutaneous determination, is limited to only measuring total bilirubin and not direct, indirect and delta bilirubin fractions. Future work could include exploring a device to measure fractions in addition to TSB. In FIG. 13, a 2OD neutral density filter was measured at each wavelength using the BiliSpec reader after calibration was performed (A). The amber channel averaged 1.92 ± 0.01 OD, red 1.92 ± 0.01 OD, and the blue 2.02 ± 0.01 OD. The BiliSpec study lasted 32 days. Gaps were days when no clinical data was collected.

In conclusion, BiliSpec performed well compared to laboratory measurement of total bilirubin with all samples being within 3.0 mg/dL of the laboratory reference standard. The

inventors believe the system offers a more affordable and appropriately designed alternative to currently available techniques to measure TSB in low-resource settings. The device is designed to require minimal user interaction and integrate easily into a low-resource clinical setting. During the pilot study in Malawi, clinicians could consistently visually fill the pads, seal the strips, and insert them into the reader. BiliSpec offers a simple and accurate method to measure TSB to improve the diagnosis and monitoring of neonatal jaundice in low-resource settings.

Materials and Methods

Lateral Flow Card Construction.

FIG. 11 shows one method of fabrication and assembly for the lateral flow card / sample separation assembly. The photographs of the lateral flow card are shown as it is assembled from left to right. First, the acetate covering is removed from the card base (1) to allow for the target window, nitrocellulose, and over flow pads to be placed onto the card (2). Next, the leak proofing bar and absorbent pad are placed over the nitrocellulose strip in their respective positions (3) before the card is folded and ready for use (4). The scale bars in the photographs are 1 cm.

In the embodiment shown in FIG. 11, the lateral flow card construction includes six elements: the card base, leak-proofing bar, target window, nitrocellulose strip, blood collection pad, and two overflow collection pads. All components were cut using a laser cutter. The card base and leak-proofing bar are cut from a sheet of Grafix Dura Lar Clear Adhesive Backed Film consisting of an acetate sheet with a paper protecting the adhesive backing. The target window is made from Grafix Dura Lar Acetate Alternative sheet (0.010 in thick) and the nitrocellulose strip is from a Hi-Flow Plus HF090 nitrocellulose sheet with plastic backing. The blood collection pad is cut from Whatman Blood Separator MF1 glass fiber reel. The overflow collection pads are cut from a sheet of Ahlstrom Grade 8951 glass fiber. The overflow channels are used to prevent any blood from leaking out of the card or into the target area with the help of the leak-proofing bar.

The lateral flow cards were assembled by: (1) separating the leak-proofing bar from the card base and removing the acetate backing covering the target window hole, the edge of the target window, the nitrocellulose strip, the collection pad, and the area for the leak-proofing bar. (2) The nitrocellulose strip was placed, with plastic backing side down, onto the main adhesive

The overflow pads were placed in the backflow channels and the target window was placed in the target area. (3) The paper backing of the bar was removed and placed, adhesive side

down, over the nitrocellulose strip. The spotting pad was placed onto the main adhesive surface with its winglet side over the strip. (4) The paper backing around the target window was removed and folded over onto the rest of the card base leaving only the blood collection pad exposed. Once cards were assembled they were ready for use.

Laboratory Bilirubin Standard

The method used for creating a laboratory bilirubin standard is described by Doumas et al. (6). In brief, bilirubin standards were prepared by diluting a concentrated stock with a standard blank, both of which were prepared using a 40 g/L bovine serum albumin (BSA) solution. The 40.0 g/L BSA solution was prepared in Tris Buffer, pH adjusted to 7.3 ±0.1 with 1M HCl. Once fully dissolved, the BSA solution was diluted with the remaining Tris Buffer to final volume to achieve an approximate concentration of 40 g/L, and was stored at 4°C. A 60 mg/dL Bilirubin Stock was prepared under minimal lighting using 60.00 mg of SRM 916 bilirubin and washed with 2.0 mL of dimethyl sulfoxide. 4.0mL of 0.1M Na2 CO3 (aq) was then added. The mixture was swirled until the bilirubin was fully dissolved, and then diluted to volume with the 40 g/L BSA solution. This solution was stored short-term (one day or less) at 4°C or long-term at -20°C, and was protected from sources of light at all times. The Standard Blank solution was prepared by combining 2.0 mL of pure dimethyl sulfoxide and 4.0 mL of 0.1M sodium carbonate (aq) in a 100 mL volumetric flask and diluting to volume with 40 g/L BSA solution. This was stored at 4°C and was not light sensitive. Bilirubin standards were then prepared by diluting the Bilirubin Stock with Standard Blank to the desired concentration.

Laboratory Blood Sample Preparation

The inventors simulated elevated bilirubin levels in blood by replacing plasma from normal volunteers with dilutions of the bilirubin standard described above. Normal volunteers were recruited under a Rice University IRB approved study. Aliquots of 500 µL of normal blood were centrifuged. 250 µL of plasma was removed and replaced with 250 µL of diluted bilirubin stock. The samples were then mixed gently for 20-30 sec using a vortexer on the lowest speed setting. Then, 180 µL of blood was drawn into a pipette and used to fill three different lateral flow cards until the blood collection pads appeared visibly filled. This was done to simulate variable input volume expected from heelpricks during our laboratory testing. Each strip was then measured in the spectrometer approximately 2 min after spotting. The remaining blood sample was centrifuged again to separate the plasma for measurement by the laboratory standard bilirubinometer.

Volume and Time Variation Testing

The volume variability test was conducted for three different bilirubin concentrations at volumes of 20, 30, 40, 50, 60, 70, and 80 μL. Blood was spotted onto the collection pad at each concentration and volume. Separation was allowed to proceed for 2 min after which the absorbance spectrum of the strip was measured from 400 nm to 700 nm (Cary 5000 UV-Vis-NIR spectrophotometer). This was done in triplicate for each concentration-volume pair. Absorbance data form the spectrometer at 656, 532, and 460 nm was used to compute the bilirubin concentration using the data from the laboratory validation of the lateral flow cards as a training set.

The time variation test was performed at three bilirubin concentrations where 50 μL of blood was spotted onto the collection pad and allowed to separate for two minutes. At 2 minutes after spotting and every 2 minutes, the absorbance spectrum of the strip from 400 nm to 700 nm was measured (Cary 5000 UV-Vis-NIR). This was done in triplicate for each concentration and for up to 30 minutes or 2 hours depending on the experiment.

Reader Construction

The prototype reader measures the absorbance of the target area at three wavelengths using LEDs with peak wavelengths at 450 nm (LXML-PB01-0030), 580 nm (LXML-PL01-0040), and 660 nm (LXM3-PD01). These wavelengths were used to measure the absorbance of light due to bilirubin, hemoglobin, and background respectively. Free hemoglobin in the plasma was measured to account for any hemolysis that might have occurred during blood collection. Two photodiodes (Thorlabs, FDS100) were used to measure incident and transmitted light through the sample, as shown in FIG. 4. An algorithm described in Bond et al. was used to compute the optical density of the sample (20). Apertures made of black cardstock were placed along the optical pathway to reduce the amount of scattered light entering the sample detector. To calibrate the reader, three calibration cards, containing neutral density filters (1.5, 2.0, and 2.5 OD), were inserted into the reader and measured. These cards were stored in the side of the reader.

The reader automatically detects which calibration card has been inserted using the card sensor, so the cards can be inserted in any order. Once all three calibration cards have been measured, the user measures a dry lateral flow card to complete calibration. Calibration during our clinical study was done once per day and took 2-3 minutes to complete. The reader was controlled by a microcontroller (Microchip, ATmega3290A) located on a custom printed circuit board designed to the power electronics and display. The reader was powered by two rechargeable AA batteries. The system is operated by a power on/off switch and a button on the front of the reader.

* * * * *

All of the methods disclosed and claimed herein can be made and executed without undue experimentation in light of the present disclosure. While the compositions and methods of this invention have been described in terms of preferred embodiments, it will be apparent to those of skill in the art that variations may be applied to the methods and in the steps or in the sequence of steps of the method described herein without departing from the concept, spirit and scope of the invention. More specifically, it will be apparent that certain agents which are both chemically and physiologically related may be substituted for the agents described herein while the same or similar results would be achieved. All such similar substitutes and modifications apparent to those skilled in the art are deemed to be within the spirit, scope and concept of the invention as defined by the appended claims.

V. References

The following references, to the extent that they provide exemplary procedural or other details supplementary to those set forth herein, are specifically incorporated herein by reference.

1.Bhutani VK, et al. (2013) Neonatal hyperbilirubinemia and Rhesus disease of the newborn: incidence and impairment estimates for 2010 at regional and global levels. Pediatric research 74 Suppl 1(December):86–100.

2. March of Dimes, PMNCH, Save the Children W (2012) Born Too Soon: The Global Action Report on Preterm Birth. World Health Organization pp. 1–126.

3. D-Rev (2015) Newborn Health.

4. Design that Matters (2016) Firefly.

5. Horecker BL (1943) The Absorption Spectra of Hemoglobin and its Derivatives in the Visible and Near Infra-red Regions. J. Biol. Chem. 148(1):173–183.

6. Doumas BT, Poon Pat Kwok-Cheung, Perry BW (1985) Candidate reference method for determination of total bilirubin in serum: Development and validation. Clinical Chemistry 31(11):1779–1789.

7. Blanckaert N, et al. (1980) Measurement of bilirubin and its monoconjugates and diconjugates in human serum by alkaline methanolysis and high-performance liquid chromatography. The Journal of laboratory and clinical medicine 96(2):198–212.

8. Olusanya BO, Imosemi DO, Emokpae AA (2016) Differences Between Transcutaneous and Serum Bilirubin Measurements in Black African Neonates. Pediatrics 138(3):e20160907– e20160907.

9. Tan KL, Dong F (2003) Transcutaneous bilirubinometry during and after phototherapy. Acta paediatrica 92:327–331.

10. M. Jeffrey Maisels, MB, BCh, Enrique M. Ostrea, Jr, MD, Suzanne Touch, MD, Sarah E. Clune, DO, Eugene Cepeda, MD||, Elizabeth Kring, RN, Karin Gracey, RN, MSN, Cheryl Jackson, RN, MSN, Deborah Talbot, RN, MSN and Raywin Huang P (2006) Evaluation of a new transcutaneous bilirubinometer in Chinese newborns. Archives of disease in childhood. Fetal and neonatal edition 91:F434–F438.

11. Olusanya BO, Emokpae AA (2017) Use of Transcutaneous Bilirubin to Determine the Need for Phototherapy in Resource-Limited Settings. Neonatology pp. 324–330.

12. Moyer va, Ahn C SS (2000) Accuracy of Clinical Judgment in Neonatal Jaundice. Archives of Pediatrics & Adolescent Medicine 154(4):391.

13. HA Barko, GL Jackson, Engle W (2006) Evaluation of a point-of-care direct spectrophotometric method for measurement of total serum bilirubin in term and near-term neonates. 26(2):100–105.

14. Rutstein SE, et al. (2014) Measures of viral load using Abbott RealTime HIV-1 Assay on venous and fingerstick dried blood spots from provider-collected specimens in Malawian District Hospitals. Journal of Clinical Virology 60(4):392–398.

15. Bond MM, Richards-Kortum RR (2015) Drop-to-drop variation in the cellular components of fingerprick blood: Implications for point-of-care diagnostic development. American Journal of Clinical Pathology 144(6):885–894.

16. UNICEF (2017) UNICEF Supply Catalog.

17. Greco C, et al. (2017) Comparison between Bilistick System and transcutaneous bilirubin in assessing total bilirubin serum concentration in jaundiced newborns. Journal of Perinatology (February):1–4.

18. Coda Zabetta CD, et al. (2013) Bilistick: a low-cost point-of-care system to measure total plasma bilirubin. Neonatology 103(3):177–81.

19. Bilimetrix (2016) Bilistick System.

20. Bond M, Mvula J, Molyneux E, Richards-Kortum R (2014) Design and performance of a low cost, handheld reader for diagnosing anemia in Blantyre, Malawi in 2014 IEEE Healthcare Innovation Conference (HIC). (IEEE), No. 0940902, pp. 267–270.

21. Passing H, Bablok W (1983) A new biometrical procedure for testing the equality of measurements from two different analytical methods. Application of linear regression procedures for method comparison studies in Clinical Chemistry, Part 1. J. Clin. Chem. Clin. Biochem. 21(11):709–720.

22. Martin Bland J, Altman D (1986) Statistical Methods for Assessing Agreement Between Two Methods of Clinical Measurement. The Lancet 327(8476):307–310.

PCT Patent Publication WO 2014/024066

PCT Patent Publication WO 1995/000843

U.S. Patent 8,730,460

Russian Patent RU 2035045

CLAIMS

What is claimed is:

1. A method of estimating total bilirubin concentration in a neonatal blood or blood product sample comprising:

(a) providing a sample separation assembly comprising a first substrate that physically or chemically removes red blood cells from said sample, but preferentially passes at least plasma, serum and bilirubin to a second substrate that is adjacent to said first substrate, wherein said second substrate that supports capillary movement of blood or a blood product;

(b) contacting said receiving apparatus with a neonatal blood or blood product sample in a volume of 10 µl to 1 ml;

(c) inserting at least a portion of said second substrate into a sample reader that is capable of measuring optical density (OD) of said second substrate at wavelengths including a first wavelength between 420 - 520 nm, a second wavelength between 530 - 600 nm, and a control wavelength, wherein the control wavelength is a wavelength at which neither bilirubin or hemoglobin are absorbed;

(d) obtaining OD values of said second substrate at the first wavelength, the second wavelength, and the control wavelength;

(e) performing a scaled subtraction of the OD values at the first wavelength *versus* the second wavelength, and the first wavelength *versus* the control wavelength; and

(f) comparing a scaled value at the first wavelength obtained in step (e) with one or more standard values that permit estimation of total bilirubin concentration in said sample.

2. The method of claim 1, wherein said first substrate provides physical removal of red blood cells from said sample, such as by pore size, pore shape or pore charge.

3. The method of claim 1, wherein said first substrate provides chemical removal of red blood cells from said sample, such as by a coagulant.

4. The method of claim 1, wherein the volume of sample is about 40 µl.

5. The method of claim 1, wherein said first and second substrates are separated by an air pocket when the sample separation assembly is inserted into the sample reader.

6. The method of claim 1, wherein said first and second substrates are in direct contact with each other.

7. The method of claim 1, further comprising assessing the pH of said sample.

8. The method of claim 1, further comprising estimating free or total hemoglobin concentration of said sample.

9. The method of claim 1, wherein said second substrate is a lateral flow strip, and or wherein said first substrate is a filter pad.

10. The method of claim 1, further comprising calibrating said sample reader with optical density calibration standards comprising two or more optical densities from about OD 1.0 to about OD 2.5.

11. A system for estimating neonatal total bilirubin concentration comprising:

(a) a sample separation assembly comprising a first substrate that physically or chemically removes red blood cells from a sample, but preferentially passes at least plasma, serum and bilirubin to a second substrate that is adjacent to said first substrate, wherein said secondary substrate that supports capillary movement of blood or a blood product; and

(b) a sample reader comprising:

(i) at least one light emitting diode (LED) capable of emitting wavelengths including 450 nm $\pm$ 10 nm, 580 nm $\pm$ 10 nm, and 660 nm $\pm$ 30 nm;

(ii) a chamber for receiving said secondary substrate;

(iii) at least one optical pathway operably connecting said at least one LED and said chamber, said pathway being defined by one or more contiguous walls, wherein one or more of said contiguous walls comprise one or more apertures;

(iv) at least one light detection sensor capable of detecting wavelengths including 450 nm ± 10 nm, 580 nm ± 10 nm, and 660 nm ± 30 nm;

(v) a microprocessor capable of controlling one or more functions in said sample reader; and

(vi) a power source operably connected to a power switch.

12. The system of claim 11, wherein said first substrate provides physical removal of red blood cells from said sample, such as by pore size, pore shape or pore charge.

13. The system of claim 11, wherein said first substrate provides chemical removal of red blood cells from said sample, such as by a coagulant.

14. The system of claim 11, wherein said first and second substrates are separated by an air pocket when the sample separation assembly is inserted into the sample reader.

15. The system of claim 11, wherein said first and second substrates are in direct contact with each other.

16. The system of claim 11, further comprising a probe that is capable of assessing the pH of a sample on said second substrate.

17. The system of claim 11, further comprising LED's, sensors and standards capable of estimating free or total hemoglobin concentration of a sample on said second substrate.

18. The system of claim 11, wherein said second substrate is a lateral flow strip, and/or wherein said first substrate is a filter pad.

19. The system of claim 11, wherein the sample reader further comprises a port that contains an optical density calibration standard.

20. The system of claim 19, wherein said at least two ports comprise OD standards of OD 1.5 and OD 2.0, OD 1.5 and OD 2.5, OD 2.0 and OD 2.5, or OD 1.5, OD 2.0 and OD 2.5.

21. The system of claim 11, wherein said optical pathway is an open air pathway.

22. A sample reader for estimating neonatal total bilirubin concentration comprising:

(i) at least one light emitting diode (LED) capable of emitting wavelengths including a first wavelength between 420 - 520 nm, a second wavelength between 530 - 600 nm, and a control wavelength, wherein the control wavelength is a wavelength at which neither bilirubin or hemoglobin are absorbed;

(ii) a chamber for receiving a sample substrate;

(iii) at least one optical pathway operably connecting said at least one LED and said chamber, said pathway being defined by one or more contiguous walls, wherein one or more of said contiguous walls comprise one or more apertures;

(iv) at least one light detection sensor capable of detecting wavelengths including the first wavelength, the second wavelength, and the control wavelength;

(v) a microprocessor capable of controlling one or more functions in said sample reader; and

(vi) a power source operably connected to a power switch.

23. The sample reader of claim 22, further comprising a probe that is capable of assessing the pH of a sample on said sample substrate.

24. The sample reader of claim 22, further comprising LED's, sensors and standards capable of estimating free or total hemoglobin concentration of a sample on said sample substrate.

25. The sample reader of claim 22, further comprising two or three two ports comprising OD standards of OD 1.5 and OD 2.0, OD 1.5 and OD 2.5, OD 2.0 and OD 2.5, or OD 1.5, OD 2.0 and OD 2.5.

26. The sample reader of claim 22, wherein said optical pathway is an open air pathway.

27. The sample reader of claim 22 further comprising a port that contains an optical density calibration standard.

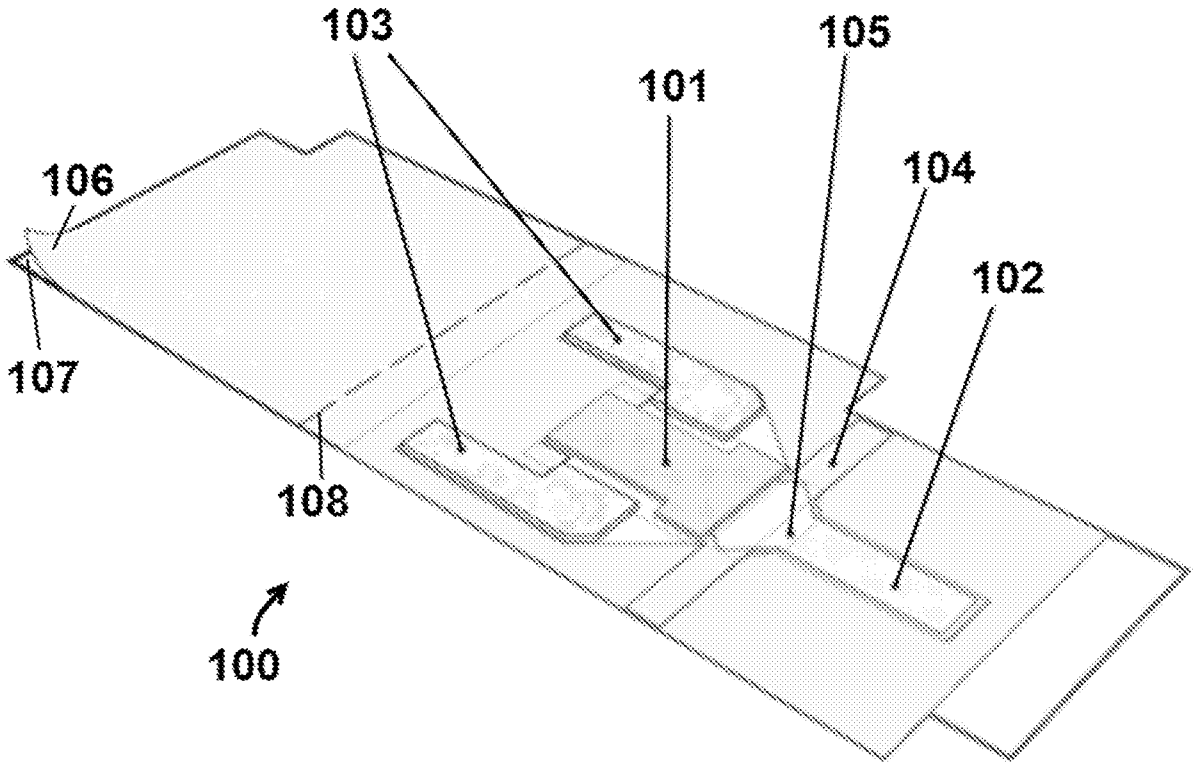

FIG. 1

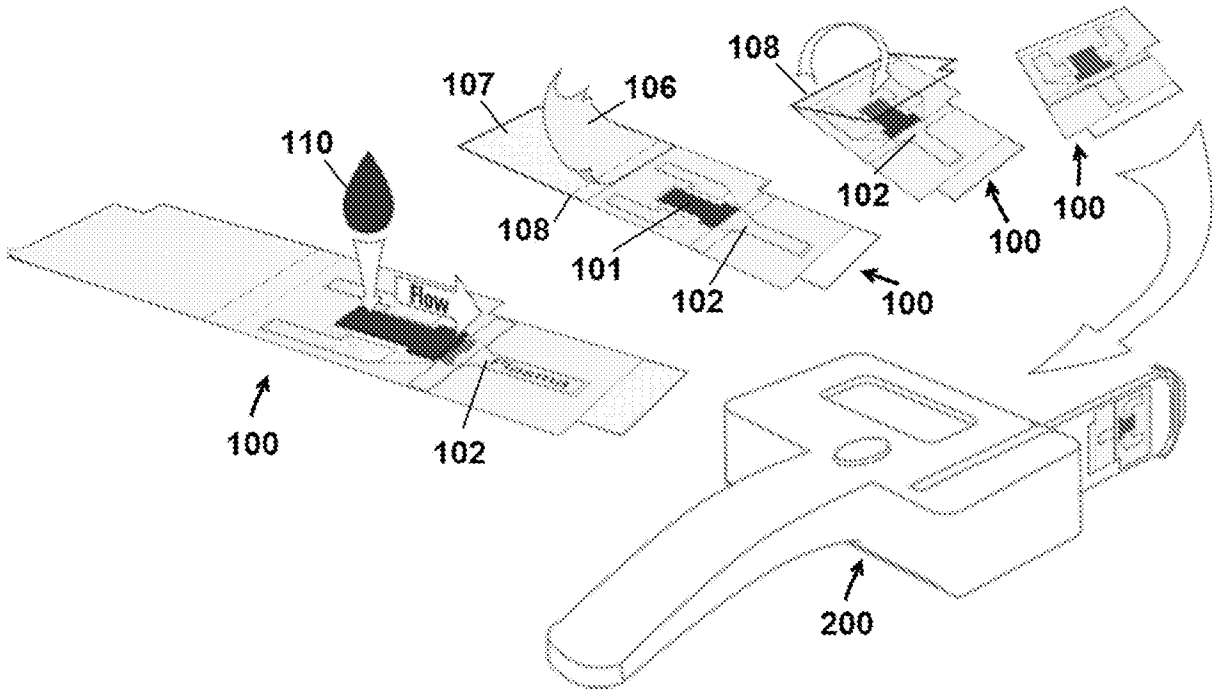

FIG. 2

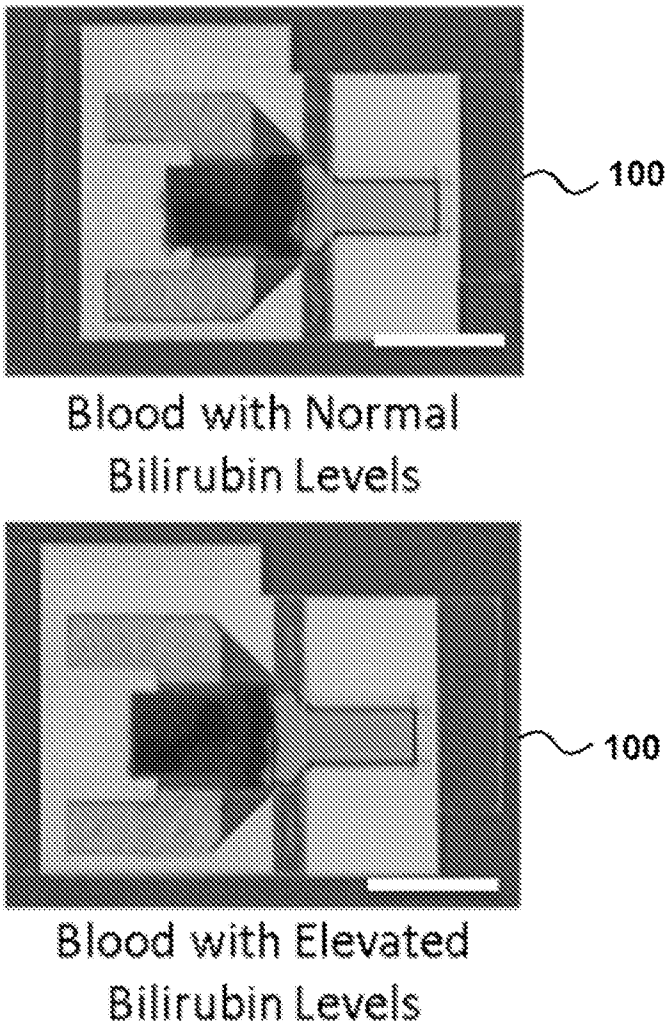
100
Blood with Normal Bilirubin Levels
100
Blood with Elevated Bilirubin Levels

FIG. 3

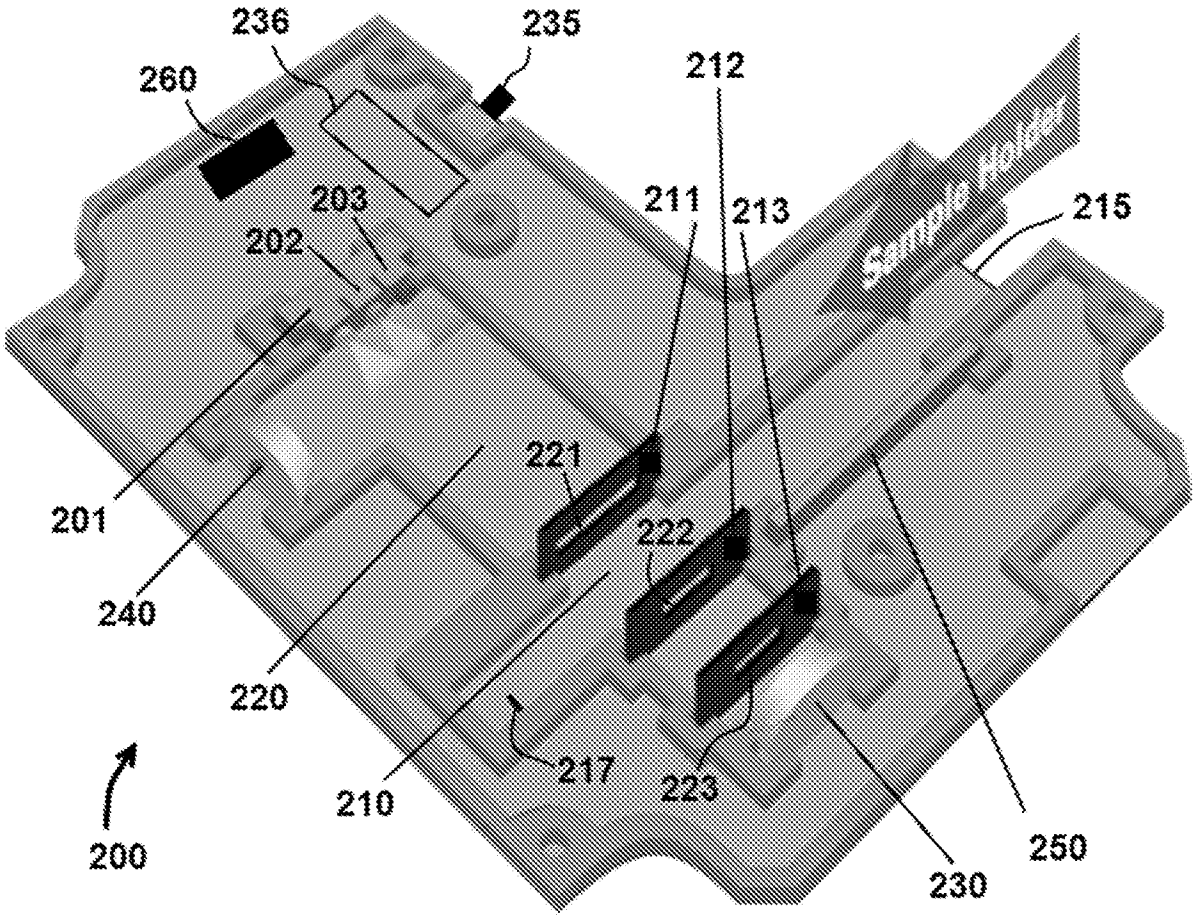
236
235
260
212
211
213
203
202
Sample Holder
215
221
201
222
240
220
217
210
223
200
230
250

FIG. 4

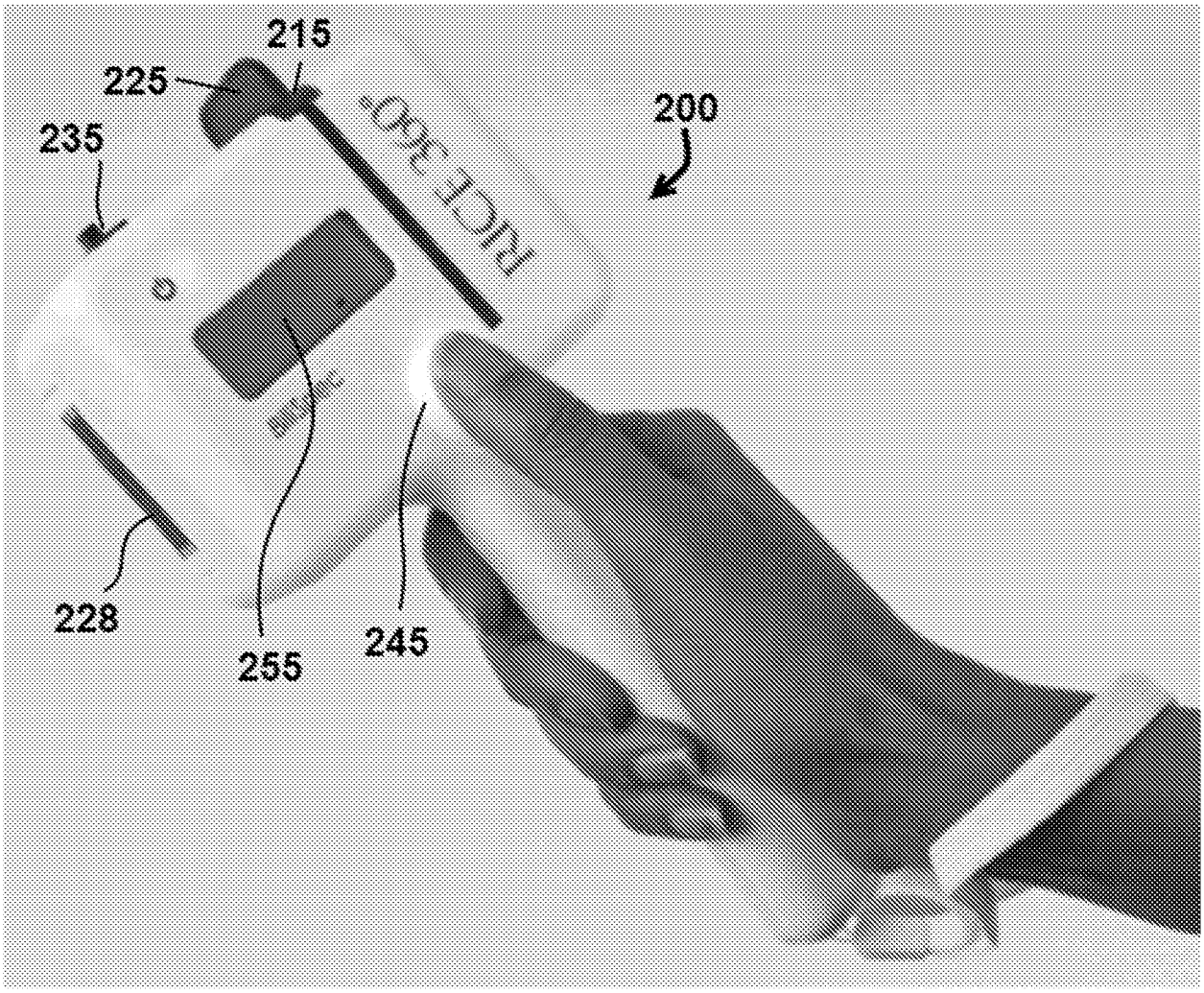

FIG. 5

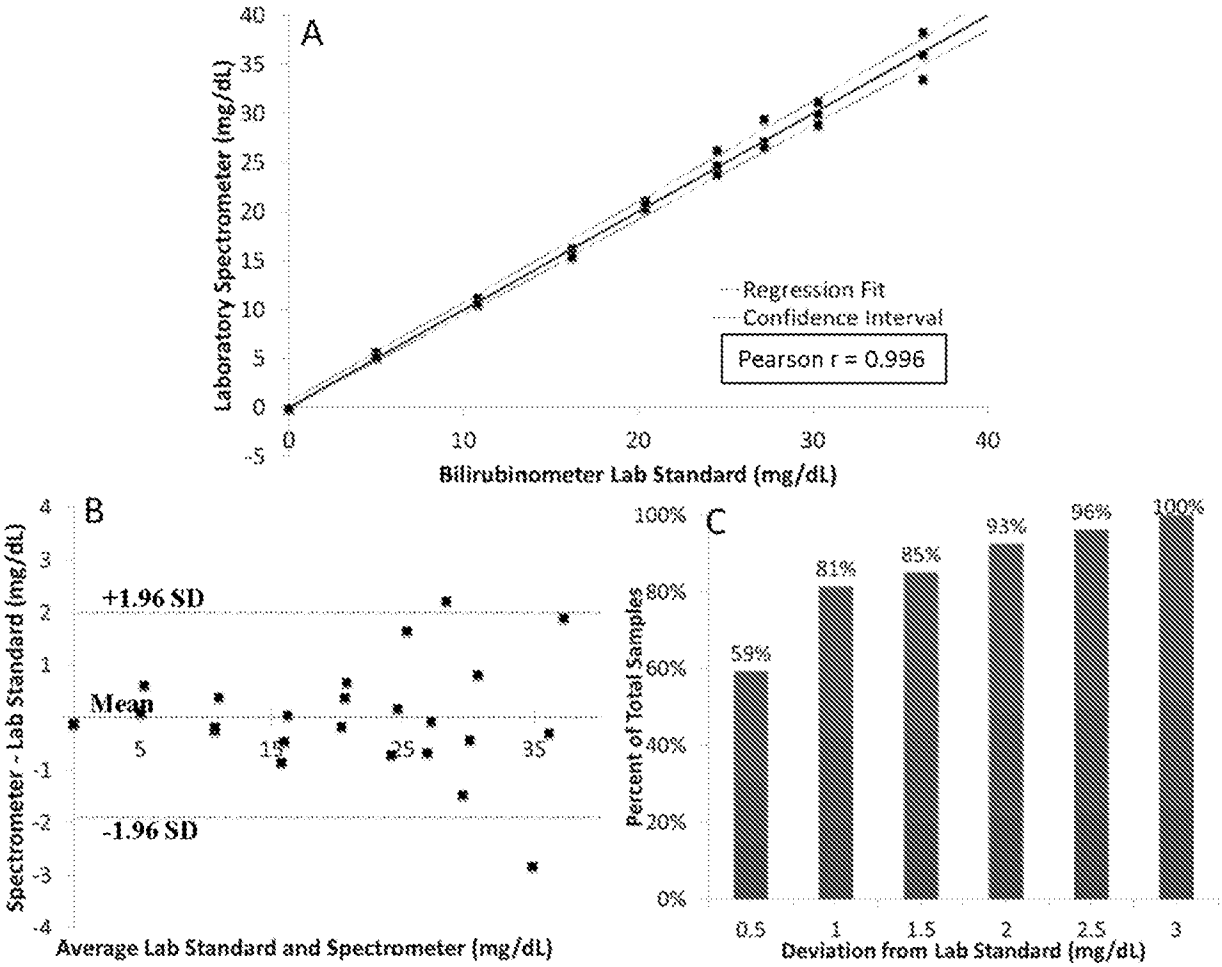
A
Laboratory Spectrometer (mg/dL)
Bilirubinometer Lab Standard (mg/dL)
Regression Fit
Confidence Interval
Pearson r = 0.996
B
Spectrometer - Lab Standard (mg/dL)
Average Lab Standard and Spectrometer (mg/dL)
+1.96 SD
Mean
-1.96 SD
C
Percent of Total Samples
Deviation from Lab Standard (mg/dL)
59%
81%
85%
93%
96%
100%

FIG. 6

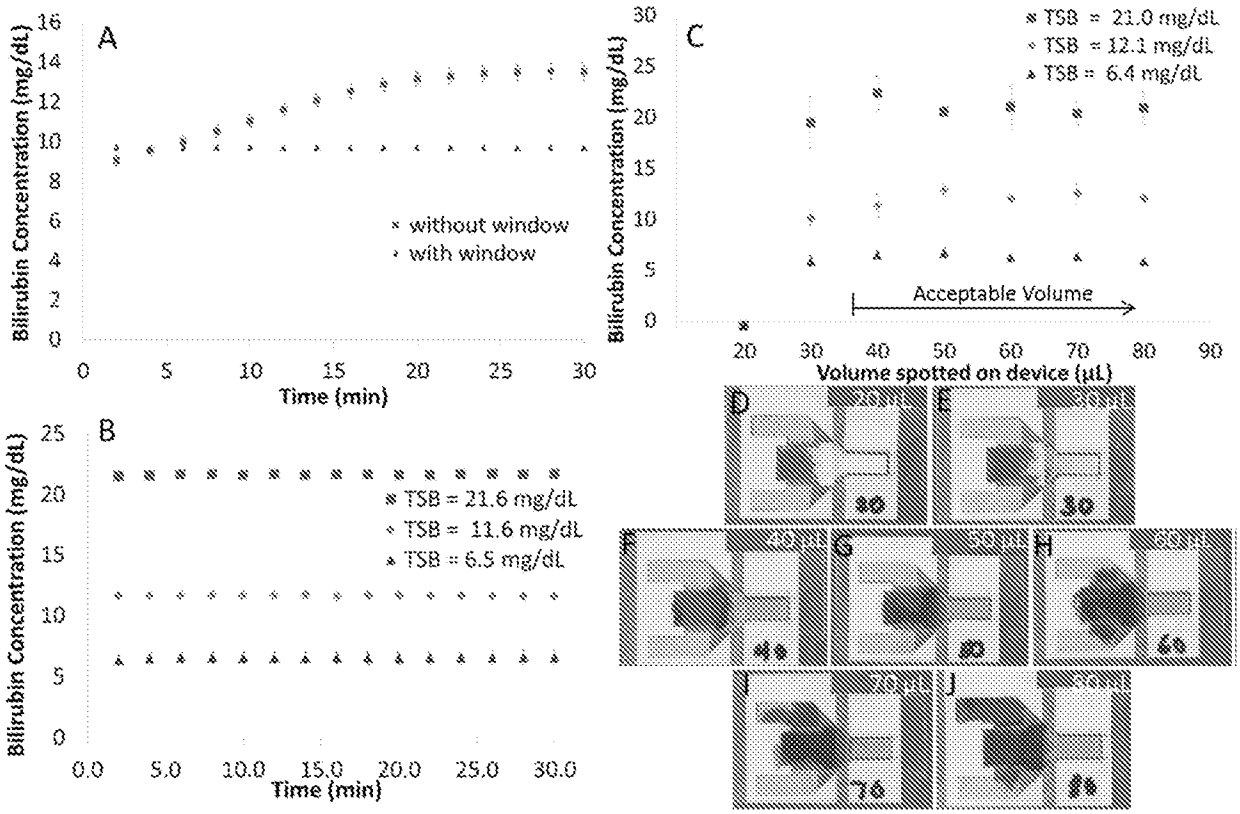
A
Bilirubin Concentration (mg/dL)
Time (min)
without window
with window
B
Bilirubin Concentration (mg/dL)
Time (min)
TSB = 21.6 mg/dL
TSB = 11.6 mg/dL
TSB = 6.5 mg/dL
C
Bilirubin Concentration (mg/dL)
Volume spotted on device (µL)
TSB = 21.0 mg/dL
TSB = 12.1 mg/dL
TSB = 6.4 mg/dL
Acceptable Volume
D
E
F
G
H
I
J

FIG. 7

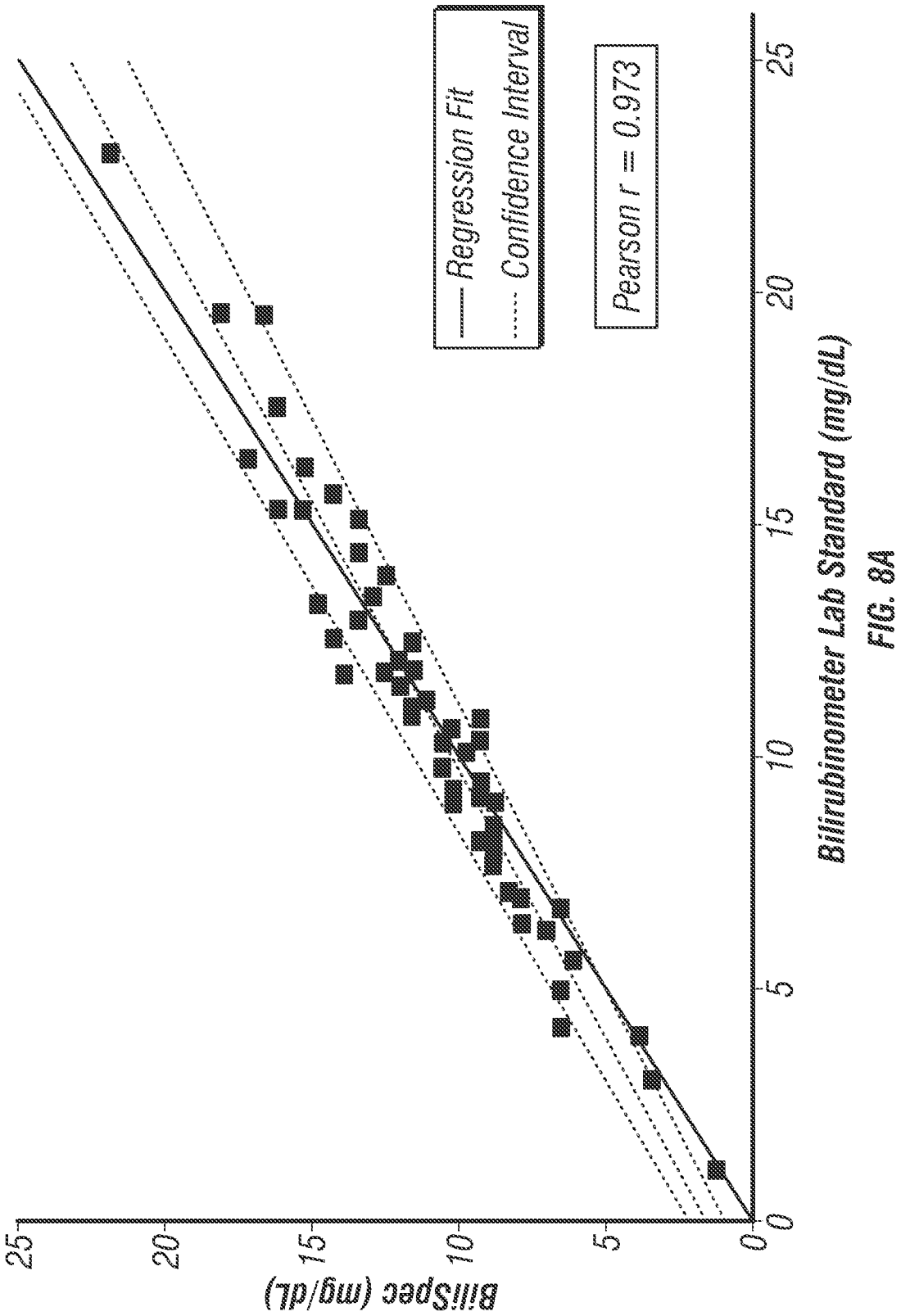
Regression Fit
Confidence Interval
Pearson r = 0.973
BiliSpec (mg/dL)
Bilirubinometer Lab Standard (mg/dL)
0
5
10
15
20
25

FIG. 8A

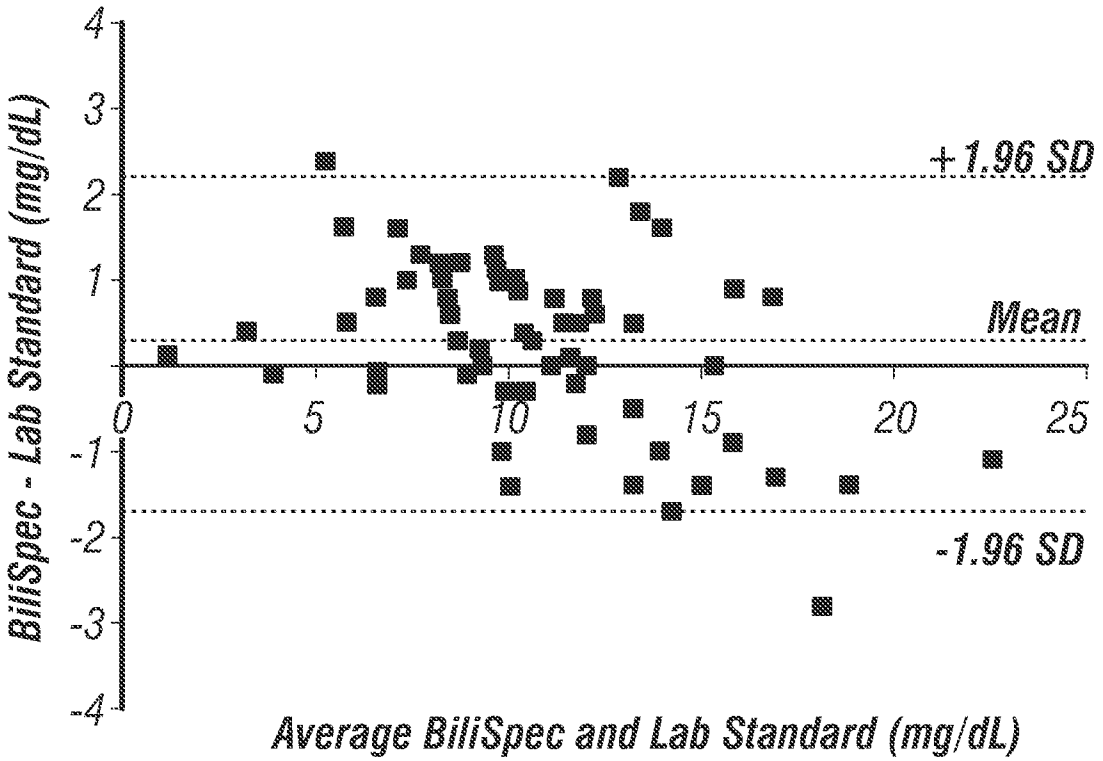
BiliSpec - Lab Standard (mg/dL)
4
3
2
1
0
-1
-2
-3
-4
+1.96 SD
Mean
-1.96 SD
0
5
10
15
20
25
Average BiliSpec and Lab Standard (mg/dL)

FIG. 8B

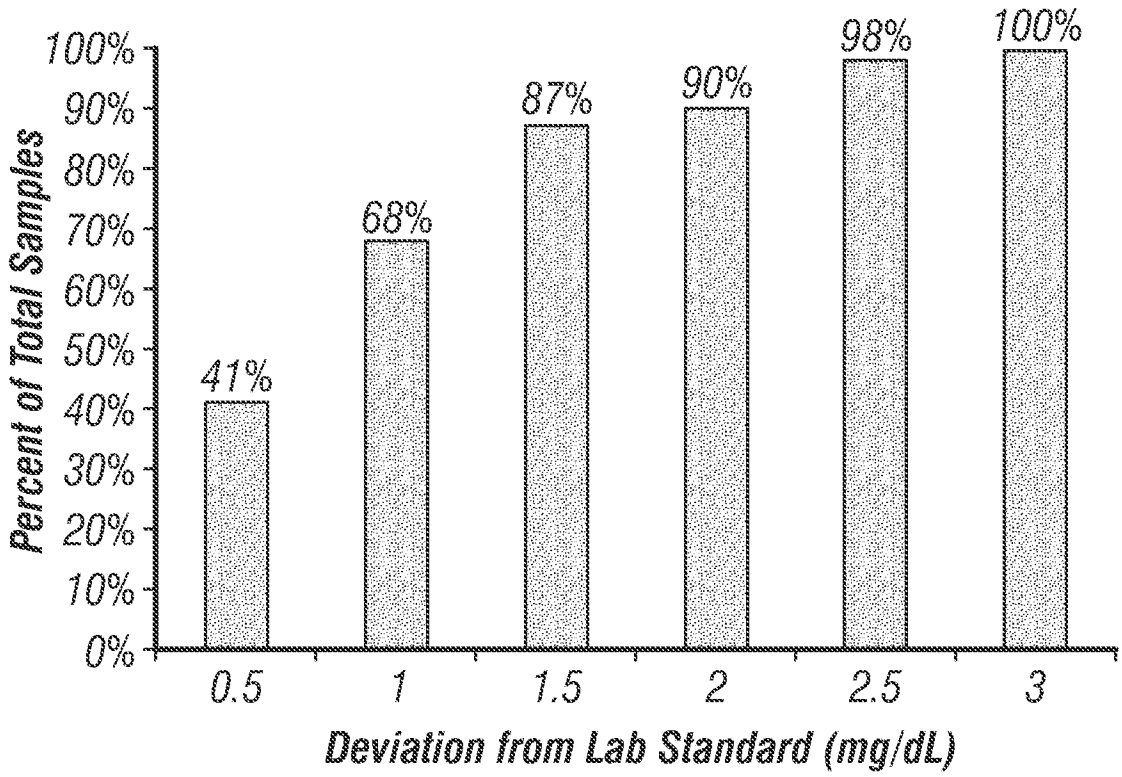
Percent of Total Samples
100%
90%
80%
70%
60%
50%
40%
30%
20%
10%
0%
41%
68%
87%
90%
98%
100%
0.5
1
1.5
2
2.5
3
Deviation from Lab Standard (mg/dL)

FIG. 8C

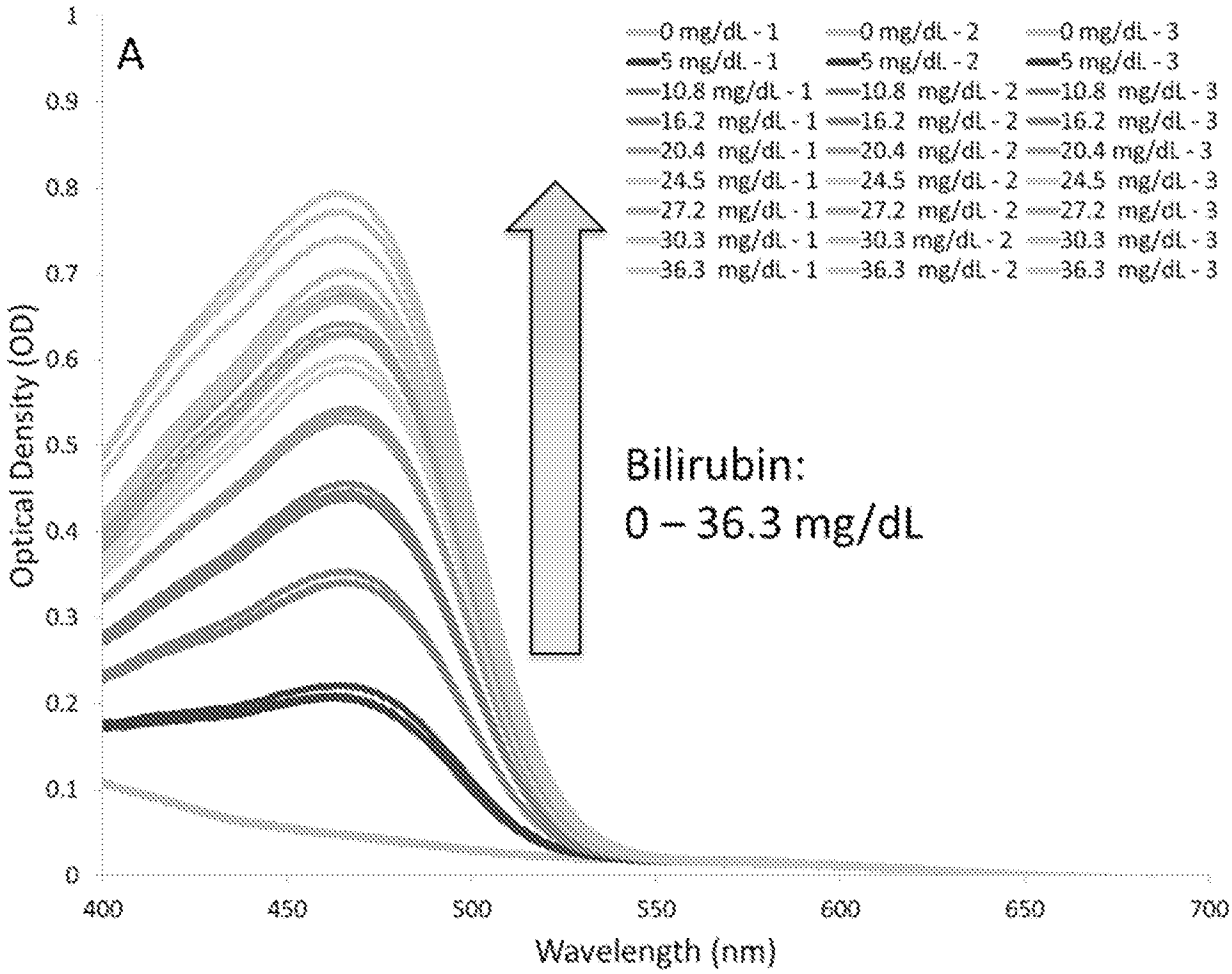
A
0 mg/dL - 1
0 mg/dL - 2
0 mg/dL - 3
5 mg/dL - 1
5 mg/dL - 2
5 mg/dL - 3
10.8 mg/dL - 1
10.8 mg/dL - 2
10.8 mg/dL - 3
16.2 mg/dL - 1
16.2 mg/dL - 2
16.2 mg/dL - 3
20.4 mg/dL - 1
20.4 mg/dL - 2
20.4 mg/dL - 3
24.5 mg/dL - 1
24.5 mg/dL - 2
24.5 mg/dL - 3
27.2 mg/dL - 1
27.2 mg/dL - 2
27.2 mg/dL - 3
30.3 mg/dL - 1
30.3 mg/dL - 2
30.3 mg/dL - 3
36.3 mg/dL - 1
36.3 mg/dL - 2
36.3 mg/dL - 3
Bilirubin:
0 – 36.3 mg/dL
Optical Density (OD)
0
0.1
0.2
0.3
0.4
0.5
0.6
0.7
0.8
0.9
1
400
450
500
550
600
650
700
Wavelength (nm)

FIG. 9

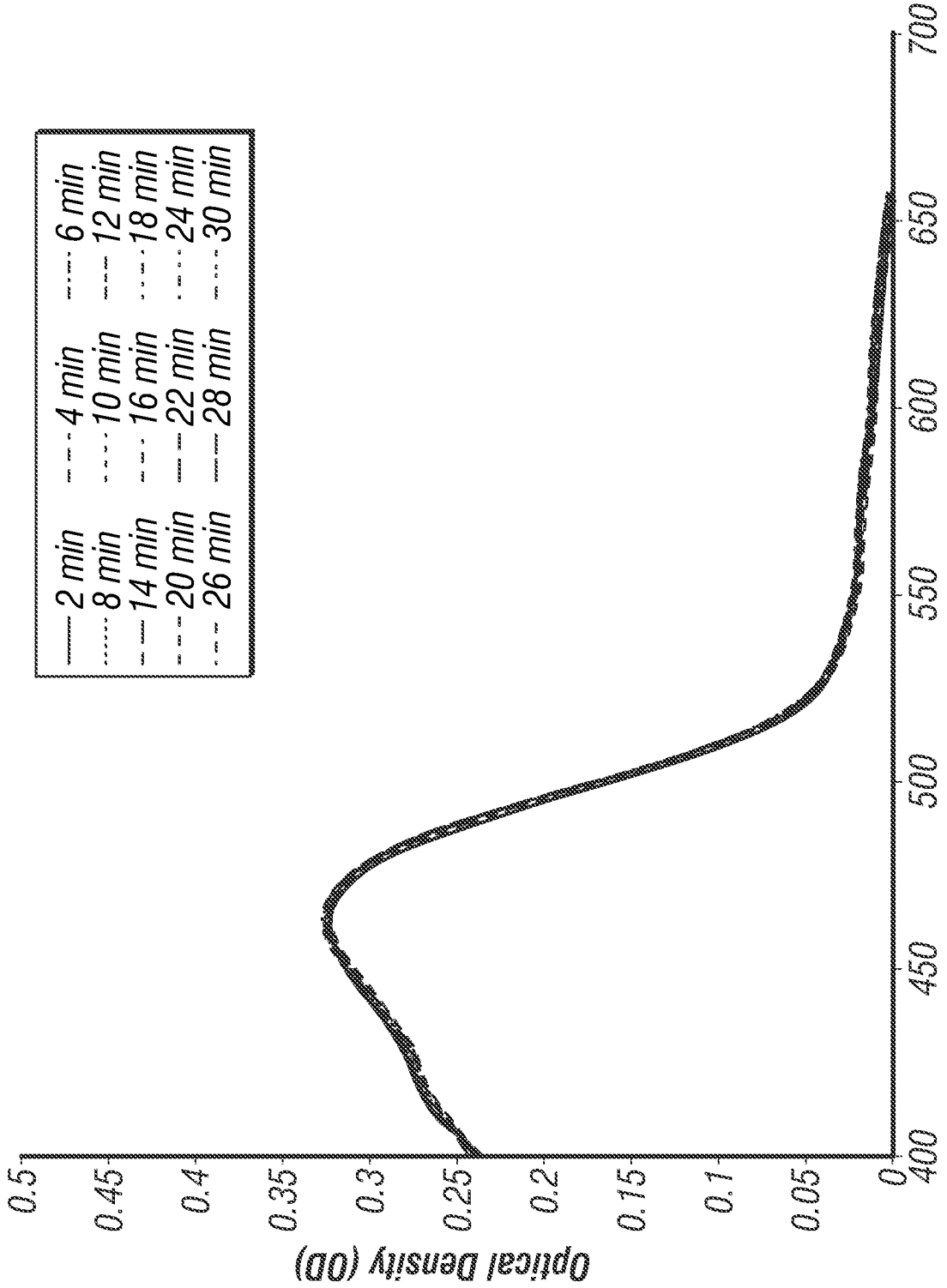
2 min
4 min
6 min
8 min
10 min
12 min
14 min
16 min
18 min
20 min
22 min
24 min
26 min
28 min
30 min
Optical Density (OD)
0.5
0.45
0.4
0.35
0.3
0.25
0.2
0.15
0.1
0.05
0
400
450
500
550
600
650
700
Wavelength (nm)

FIG. 10A

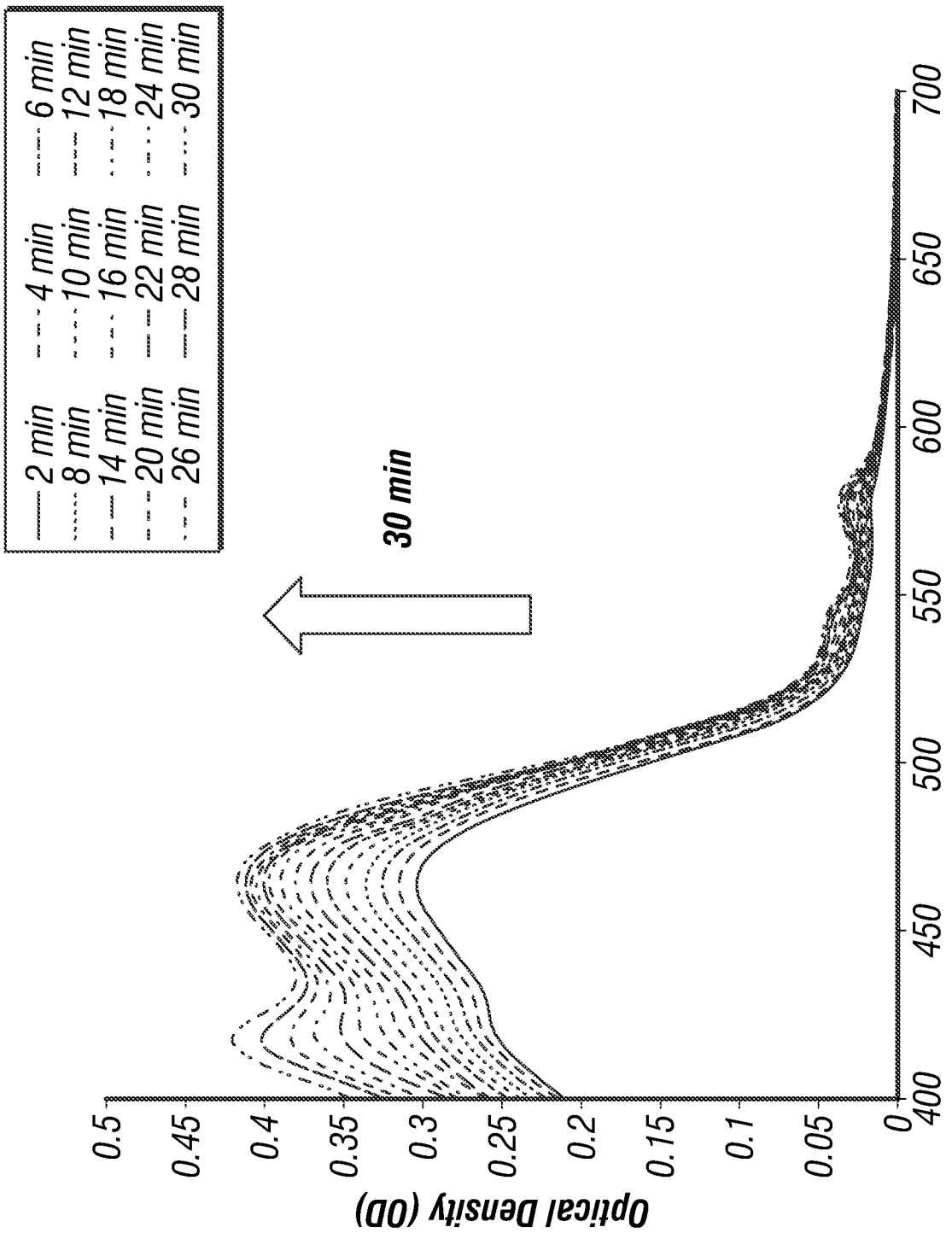
2 min
4 min
6 min
8 min
10 min
12 min
14 min
16 min
18 min
20 min
22 min
24 min
26 min
28 min
30 min
30 min
Optical Density (OD)
0.5
0.45
0.4
0.35
0.3
0.25
0.2
0.15
0.1
0.05
0
400
450
500
550
600
650
700
Wavelength (nm)

FIG. 10B

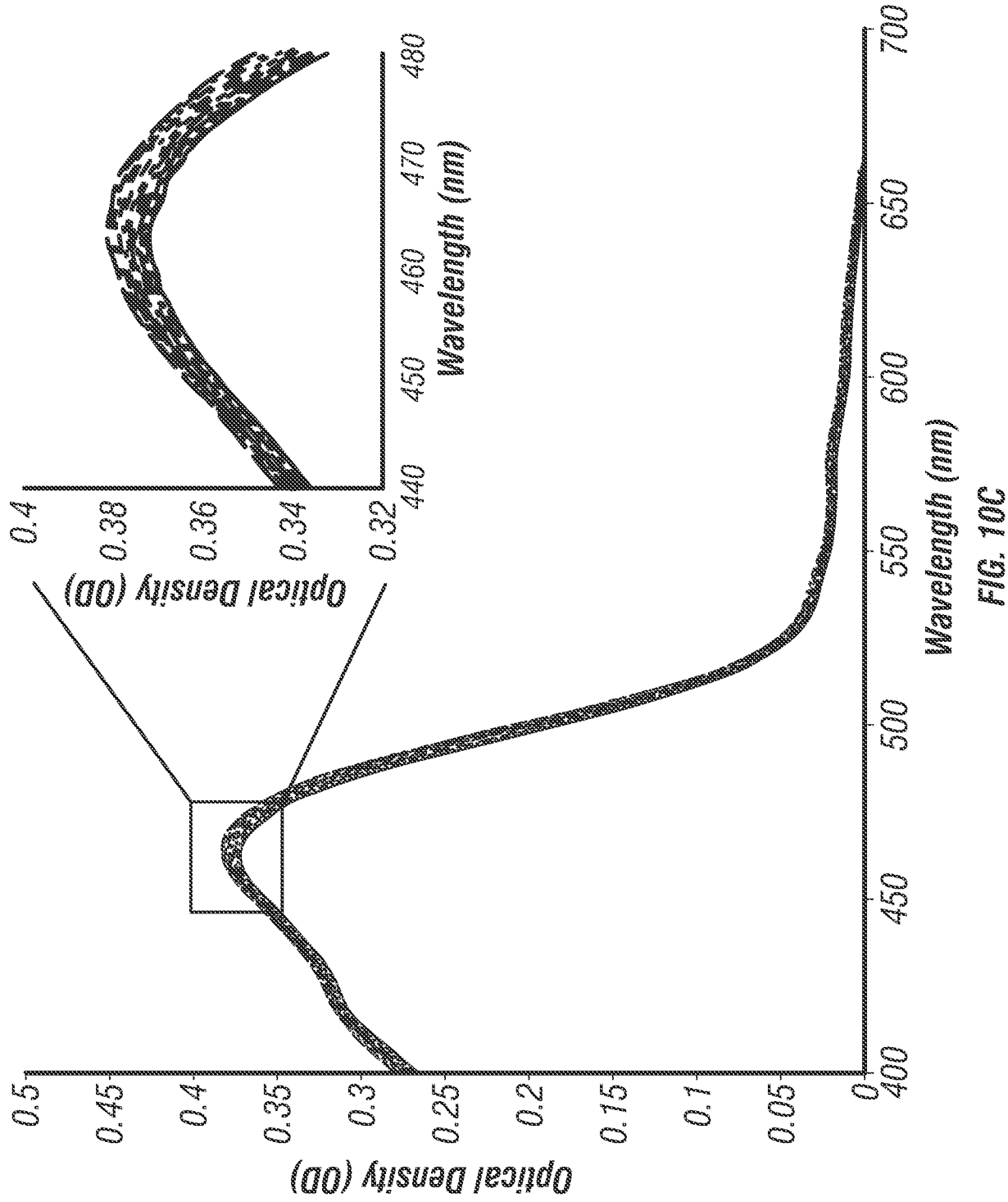
Optical Density (OD)
0.5
0.45
0.4
0.35
0.3
0.25
0.2
0.15
0.1
0.05
0
400
450
500
550
600
650
700
Wavelength (nm)
Optical Density (OD)
0.4
0.38
0.36
0.34
0.32
440
450
460
470
480
Wavelength (nm)

FIG. 10C

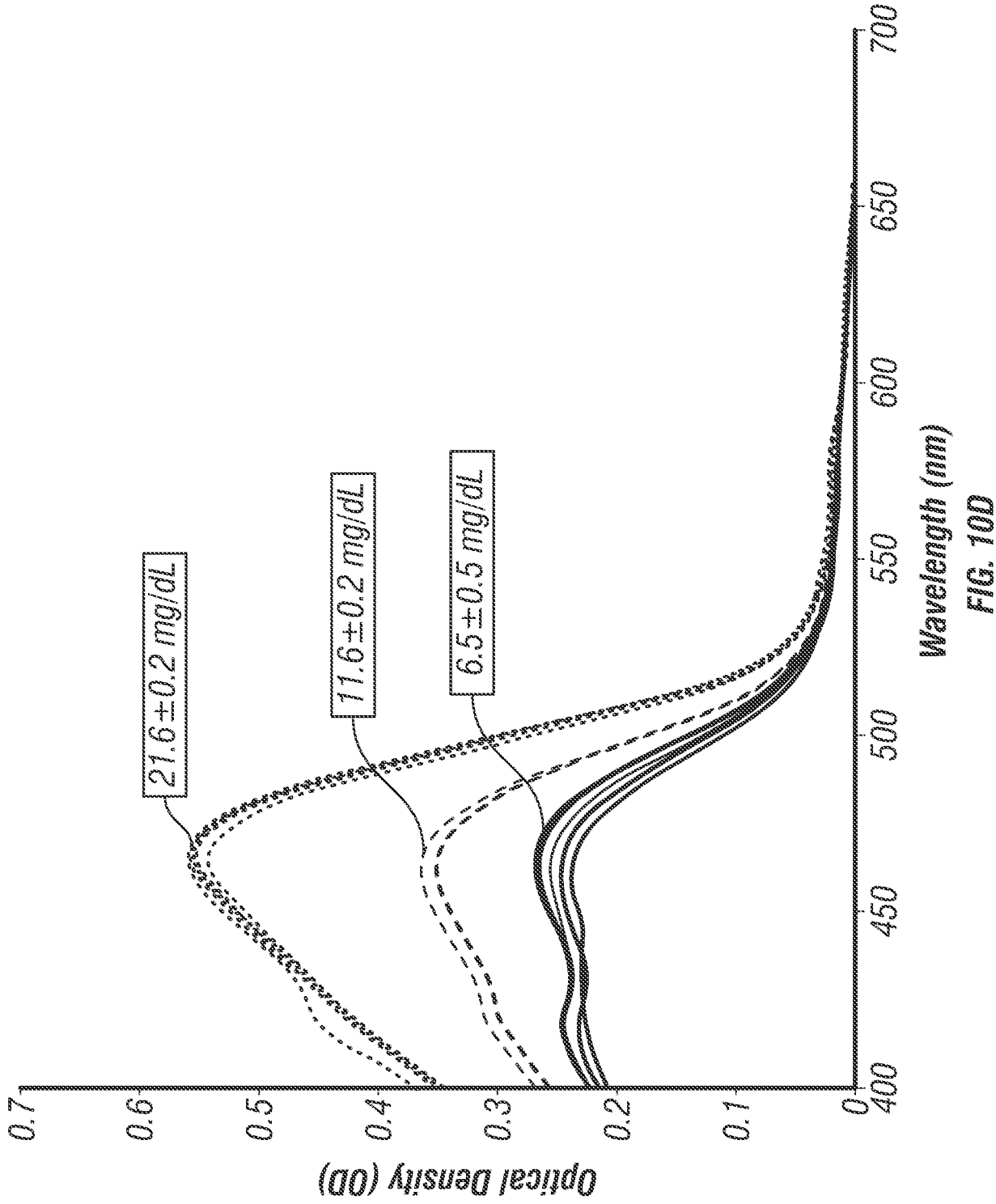
21.6±0.2 mg/dL
11.6±0.2 mg/dL
6.5±0.5 mg/dL
Optical Density (OD)
0.7
0.6
0.5
0.4
0.3
0.2
0.1
0
400
450
500
550
600
650
700
Wavelength (nm)

FIG. 10D

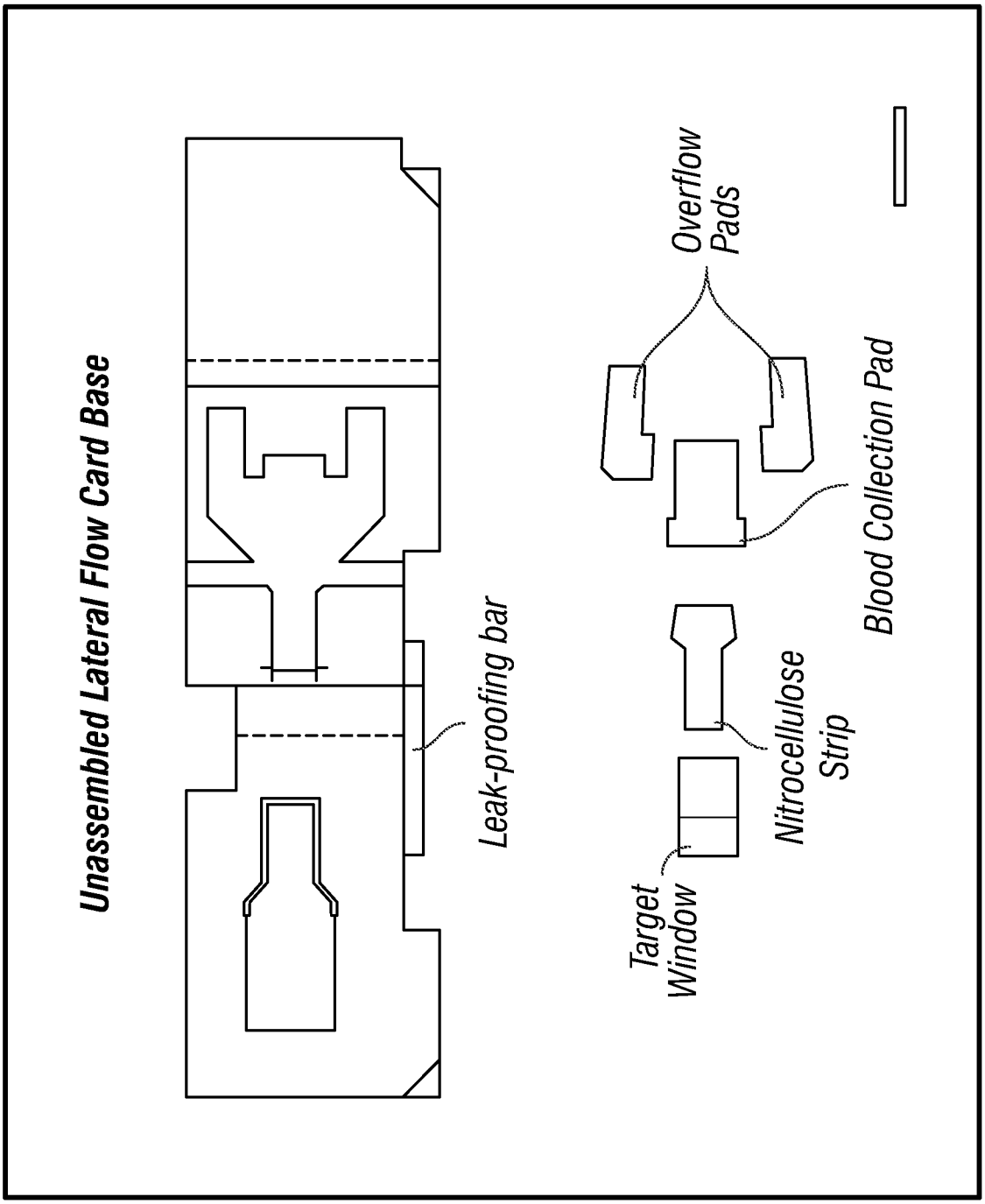
Unassembled Lateral Flow Card Base
Leak-proofing bar
Overflow Pads
Blood Collection Pad
Nitrocellulose Strip
Target Window

FIG. 11A

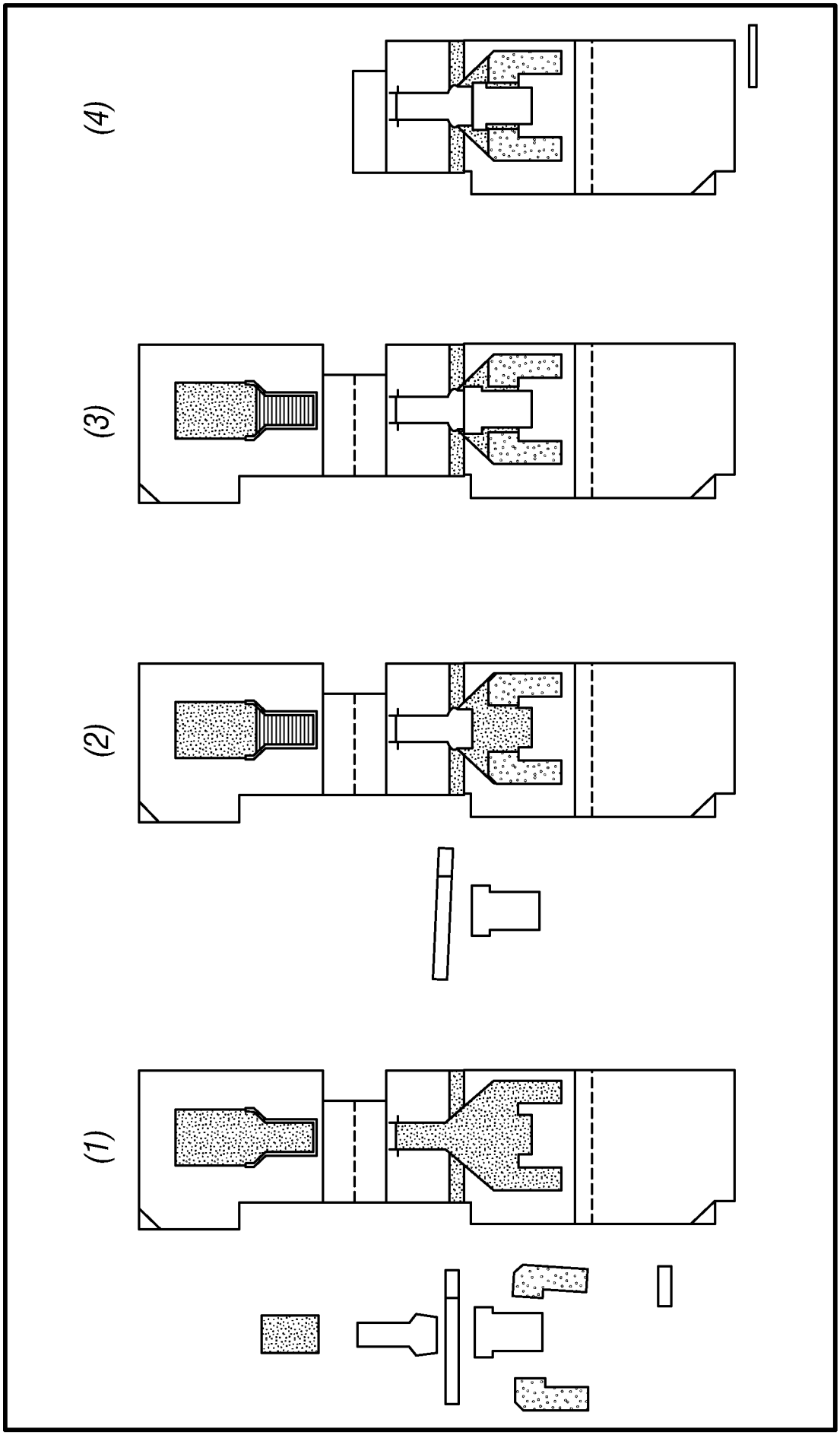

FIG. 11B

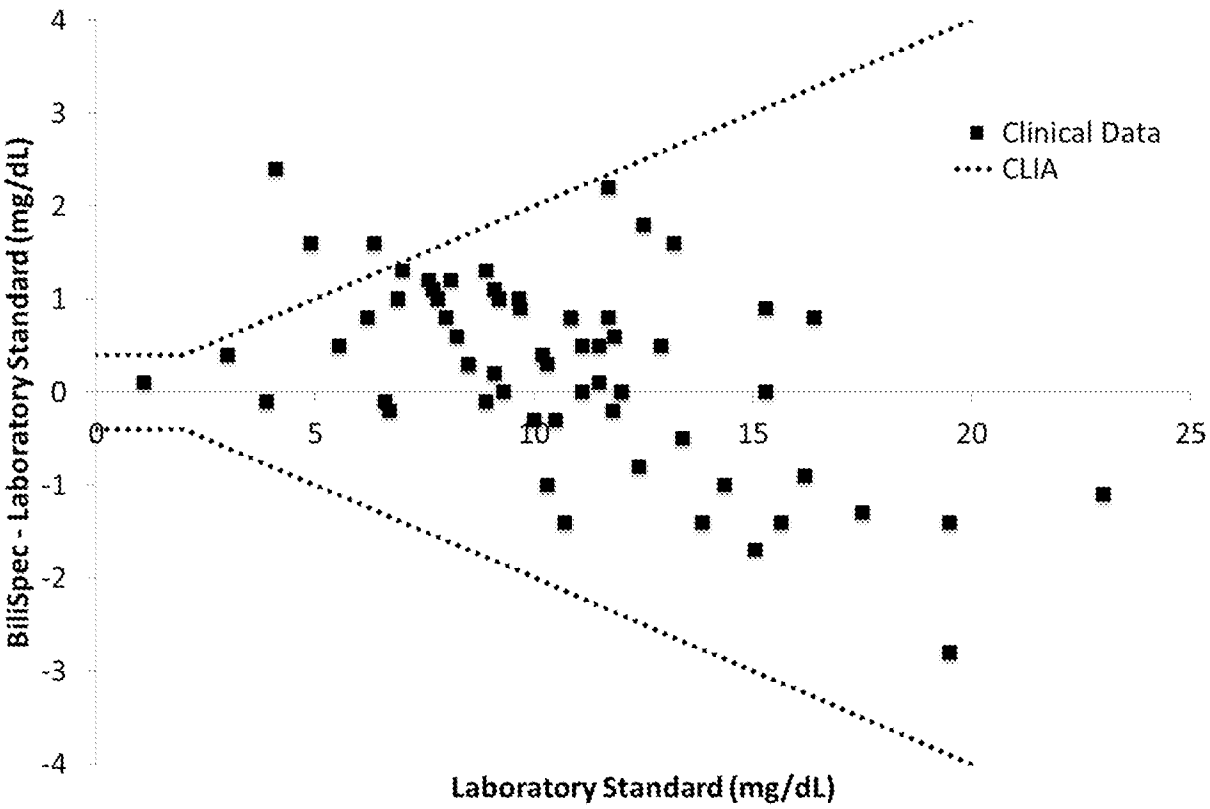
4
3
2
1
0
-1
-2
-3
-4
0
5
10
15
20
25
BiliSpec - Laboratory Standard (mg/dL)
Laboratory Standard (mg/dL)
Clinical Data
CLIA

FIG. 12

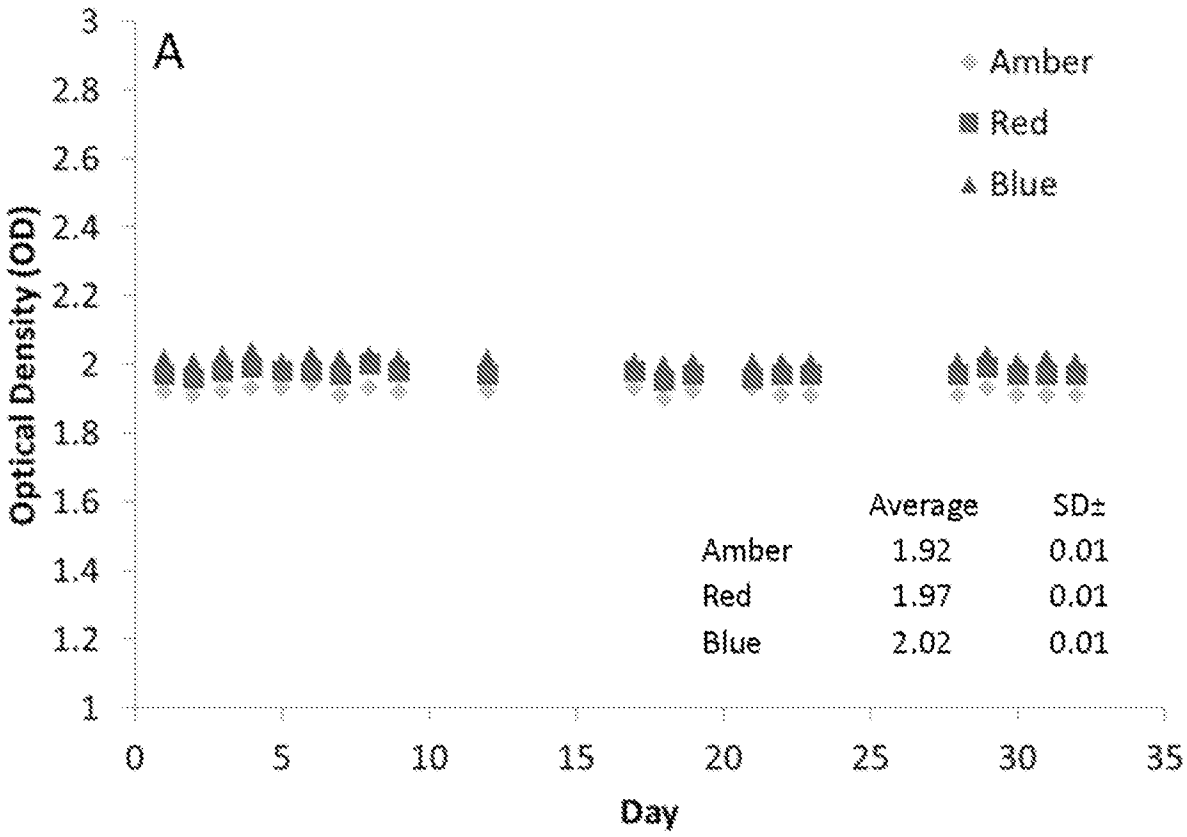
A
Amber
Red
Blue
Optical Density (OD)
3
2.8
2.6
2.4
2.2
2
1.8
1.6
1.4
1.2
1
0
5
10
15
20
25
30
35
Day
Average SD±
Amber 1.92 0.01
Red 1.97 0.01
Blue 2.02 0.01

FIG. 13

INTERNATIONAL SEARCH REPORT

International application No.
PCT/US18/58475

A. CLASSIFICATION OF SUBJECT MATTER
IPC - G01N 21/25, 33/487, 33/49, 33/50, 33/72 (2018.01)
CPC - G01N 21/25, 21/274, 21/278, 33/487, 33/49, 33/50, 33/5094, 33/72, 33/728; A61B 5/150755

According to International Patent Classification (IPC) or to both national classification and IPC

B. FIELDS SEARCHED

Minimum documentation searched (classification system followed by classification symbols)
See Search History document

Documentation searched other than minimum documentation to the extent that such documents are included in the fields searched
See Search History document

Electronic data base consulted during the international search (name of data base and, where practicable, search terms used)
See Search History document

C. DOCUMENTS CONSIDERED TO BE RELEVANT

Category*	Citation of document, with indication, where appropriate, of the relevant passages	Relevant to claim No.
Y	(ZABETTA, CDC et al.) Bilistick: A Low-Cost Point-of-Care System to Measure Total Plasma Bilirubin. Neonatology, Vol. 103, No. 3, Published online 22 December 2012; abstract; page 2	1-10
Y	US 2013/0010293 A1 (OKUBO, A et al.) 10 January 2013; abstract; figures 2, 3A; paragraphs [0013], [0077], [0082]-[0083], [0091], [0097]-[0098], [0114], [0130]	1-27
Y	WO 2012/038930 A1 (FONDAZIONE ITALIANA FEGATO-ONLUS) 29 March 2012; title; abstract; page 5, lines 20-23; page 6, lines 19-27; page 7, lines 17-28; page 8, lines 1-3; page 10, lines 21-26; column 11, lines 2-10; page 12, lines 1-18; page 13, lines 1-6, 23-24; column 14, lines 16-20; figures 2a-2b	11-27
Y	US 2015/0185233 A1 (KONINKLIJKE PHILIPS N.V.) 02 July 2015; abstract; paragraph [0019]	2, 4
Y	EP 0,535,485 A1 (MILES INC.) 07 April 1993; abstract	3, 13
Y	US 2004/0053352 A1 (OUYANG, T et al.) 18 March 2004; paragraphs [0053], [0063]	5, 14
Y	US 3,814,586 A (FRASER, JW, JR) 04 June 1974; abstract; column 2, lines 13-25	7
Y	(BOND, M) Measuring Hemoglobin: Point-of-Care Diagnostics for Anemia and Sickle Cell Disease in Low-Resource Settings, a thesis, Rice University, May 2016; pages 46, 77-78	8, 10, 17, 19-20, 24-25, 27
Y	WO 92/18887 A1 (ABBOTT LABORATORIES) 29 October 1992; abstract; page 3, lines 31-33; page 9, lines 22-31; page 10, lines 21-2	16, 23

☒ Further documents are listed in the continuation of Box C. ☐ See patent family annex.

* Special categories of cited documents:
"A" document defining the general state of the art which is not considered to be of particular relevance
"E" earlier application or patent but published on or after the international filing date
"L" document which may throw doubts on priority claim(s) or which is cited to establish the publication date of another citation or other special reason (as specified)
"O" document referring to an oral disclosure, use, exhibition or other means
"P" document published prior to the international filing date but later than the priority date claimed
"T" later document published after the international filing date or priority date and not in conflict with the application but cited to understand the principle or theory underlying the invention
"X" document of particular relevance; the claimed invention cannot be considered novel or cannot be considered to involve an inventive step when the document is taken alone
"Y" document of particular relevance; the claimed invention cannot be considered to involve an inventive step when the document is combined with one or more other such documents, such combination being obvious to a person skilled in the art
"&" document member of the same patent family

Date of the actual completion of the international search	Date of mailing of the international search report
19 December 2018 (19.12.2018)	07 FEB 2019
Name and mailing address of the ISA/ Mail Stop PCT, Attn: ISA/US, Commissioner for Patents P.O. Box 1450, Alexandria, Virginia 22313-1450 Facsimile No. 571-273-8300	Authorized officer Shane Thomas PCT Helpdesk: 571-272-4300 PCT OSP: 571-272-7774

Form PCT/ISA/210 (second sheet) (January 2015)

INTERNATIONAL SEARCH REPORT

International application No.
PCT/US18/58475

C (Continuation). DOCUMENTS CONSIDERED TO BE RELEVANT

Category*	Citation of document, with indication, where appropriate, of the relevant passages	Relevant to claim No.
Y	US 7,876,443 B2 (BERNACKI, BE) 25 January 2011; column 4, lines 19-21; column 7, lines 18-20, 26-27	21, 26
A	(BILIMETRIX) Bilistick System, a technical data sheet. 25 May 2016; entire document	1-27