(19) Europäisches Patentamt
European Patent Office
Office européen des brevets

(11) EP 1 510 272 A1

(12) EUROPEAN PATENT APPLICATION

(43) Date of publication:
**02.03.2005 Bulletin 2005/09**

(51) Int Cl.[7]: **B22D 11/00**, B22D 11/115, B22D 11/14

(21) Application number: **04020281.4**

(22) Date of filing: **26.08.2004**

(84) Designated Contracting States:
**AT BE BG CH CY CZ DE DK EE ES FI FR GB GR HU IE IT LI LU MC NL PL PT RO SE SI SK TR**
Designated Extension States:
**AL HR LT LV MK**

(30) Priority: **29.08.2003 JP 2003307108**
**26.11.2003 JP 2003395818**

(71) Applicant: **JFE Steel Corporation**
**Tokyo, 100-0011 (JP)**

(72) Inventors:
- **Itoyama, Seiji JFE Steel Corporation Tokyo 100-0011 (JP)**
- **Fujimura, Toshio JFE Steel Corporation Tokyo 100-0011 (JP)**
- **Suzuki, Makoto JFE Steel Corporation Tokyo 100-0011 (JP)**
- **Uehara, Hirohide JFE Steel Corporation Tokyo 100-0011 (JP)**
- **Matsuzaki, Takeshi JFE Steel Corporation Tokyo 100-0011 (JP)**
- **Tada, Chikashi JFE Steel Corporation Tokyo 100-0011 (JP)**
- **Miki, Yuji JFE Steel Corporation Tokyo 100-0011 (JP)**
- **Yamauchi, Akira JFE Steel Corporation Tokyo 100-0011 (JP)**

(74) Representative: **HOFFMANN EITLE**
**Patent- und Rechtsanwälte**
**Arabellastrasse 4**
**81925 München (DE)**

(54) **Method for producing ultra low carbon steel slab**

(57) An ultra-low carbon steel slab having a carbon content of about 0.01 mass percent or less is produced by casting at a casting speed of more than about 2.0 m/min using a mold provided with a casting space having a short side length D of about 150 to about 240 mm and an immersion nozzle provided with discharge spouts each having a lateral width d, the ratio D/d being in the range of from about 1.5 to about 3.0. Accordingly, a ultra-low carbon steel slab can be obtained having superior surface quality without performing slab conditioning such as scarfing.

EP 1 510 272 A1

## Description

BACKGROUND OF THE INVENTION

1. Field of the Invention

**[0001]** This invention relates to methods for producing a steel slab having ultra low carbon by continuous casting and, more particularly, relates to a method for producing a steel slab suitably used for forming outer plates of automobiles and the like with superior surface qualities.

2. Description of the Related Art

**[0002]** Steel sheets used, for example, for forming outer plates of automobiles, which are to be processed by deep drawing and/or which are to be formed into complicated shapes by deformation, should have superior formability. Hence, so-called "ultra-low-carbon steel" has been used, the carbon content of which is decreased as low as possible. Ultra-low carbon steel generally contains a C content of 0.01 mass percent or less. Among ultra-low-carbon steel sheets as described above, a cold-rolled steel sheet for forming outer plates of automobiles is particularly helpful for superior appearance in addition to superior paintability.

**[0003]** A step of removing carbon in molten steel is carried out in a refining process by oxidation using oxygen when ultra-low-carbon steel is produced. Accordingly, a deoxidizing step for removing oxygen dissolved in molten steel in this oxidation removing step is further carried out using a deoxidizing agent such as aluminum, magnesium and titanium. In this deoxidizing step, the oxygen dissolved in molten steel is allowed to react with the deoxidizing agent to form reaction products such as alumina, magnesia and titania, and the reaction products thus formed remain in the molten steel as non-metallic inclusions.

**[0004]** Defects such as slivers and/or blisters are unfavorably generated on a surface of the steel sheet in forming the slab into a thin steel sheet by hot rolling and/or cold rolling when the non-metallic inclusions as described above are present in the vicinity of a slab surface.

**[0005]** Argon gas is supplied and mold powder is added to a molten steel surface in the mold in continuous casting to prevent an immersion nozzle from being clogged which is used to supply molten steel from a tundish into the mold. When being engulfed in the molten steel, the argon gas thus supplied may simply remain in the molten steel in the form of bubbles or may combine with the reaction products (hereinafter referred to as "deoxidation reaction products") formed by deoxidation described above to form bubbles which remain in the molten steel. Surface defects are generated in both cases described above. In addition, surface defects similar to those of the deoxidation reaction products are also generated when the mold powder thus added remains in the molten steel.

**[0006]** In the past, hot-rolling is performed in the case of an ordinary slab prepared by continuous casting for forming a cold-rolled steel sheet, without performing surface treatment of the slab. However, in the case of a slab used for forming outer plates of automobiles, a surface portion of the slab having a thickness of approximately 1 to 4 mm is removed, for example, by scarfing so as to remove inclusions of deoxidation reaction products, bubbles, mold flux, and the like which may cause surface defects of a steel sheet formed after hot-rolling and, subsequently, hot rolling and cold rolling are performed.

**[0007]** Slab finishing treatment as described above decreases the yield of the slab used as a starting material and, in addition, disadvantageously causes delays in the process. Hence, in a step of manufacturing a slab using a continuous casting apparatus, attempts have been made to prevent generation of slab surface defects which cause the above-described surface defects of steel sheets.

**[0008]** Fundamental ideas of the attempts described above have been primarily based on the following (1) to (6):

(1) Slab thickness is increased so that the cross-sectional area thereof is increased for decreasing the casting speed (m/min) since slab width is restricted when being rolled. Accordingly, the residence time of molten steel in a mold is increased without degrading productivity and, as a result, the time is increased for eliminating foreign materials such as deoxidation reaction products, mold powder, bubbles, and the like to surface from inside the molten steel in the mold.

(2) Casting is performed using a continuous casting apparatus having a vertical portion to increasingly enable deoxidation reaction products, mold powder, bubbles, and the like to surface from inside molten steel in a mold for separation.

(3) A flow moving in the horizontal direction is generated in the vicinity of the meniscus by an electromagnetic force so that foreign materials floating in molten steel is prevented from being trapped by a solidification shell (washing effect).

(4) The viscosity of a mold powder is appropriately controlled so that the probability that the mold powder is engulfed

in molten steel is decreased.

(5) An oscillation (vertical vibration) condition of the mold for continuous casting is appropriately controlled to reduce generation of a nail of a solidification shell formed in the mold (phenomenon in which part of the solidification shell leans toward the molten steel side due to the oscillation), thereby decreasing the amount of deoxidation reaction products, mold powder, bubbles and the like to be trapped inside this nail.

(6) The flow of molten steel is appropriately controlled by performing electromagnetic stirring for or applying an electromagnetic brake to a flow of molten steel supplied into a mold from an immersion nozzle so that the flow of molten steel accompanied by deoxidation reaction products is prevented from reaching a deep position in the mold.

**[0009]** For example, a technique has been disclosed in Japanese Unexamined Patent Application Publication No. 5-76993 in which when casting of molten steel containing less than 0.10 percent by weight of carbon is performed using a continuous casting apparatus having a vertical portion 20 m or more long at a casting speed of 1.0 m/min or more and 4 ton/min or more to form a slab having a thickness of more than 200 mm and a width of more than 900 mm, while the powder viscosity is set to 1.0 poise or more, and an inert gas flow rate from an immersion nozzle is set to 1 liter/min or more, electromagnetic stirring is performed for molten steel present in the region from the meniscus to a depth of 1.5 m at a flow speed of 15 to 40 cm/sec in the horizontal direction. This technique is primarily based on the above paragraphs (1), (2), (3), (4), and (6).

**[0010]** In addition, a technique has been disclosed in Japanese Unexamined Patent Application Publication No. 7-155902 in which a mold oscillation condition is appropriately controlled to suppress generation of a nail portion in which inclusions are liable to be trapped, the nail portion being formed at an initial solidification stage of a slab surface portion. This technique is primarily based on the above paragraph (5).

**[0011]** However, the above-described techniques still have problems.

**[0012]** That is, as disclosed in Japanese Unexamined Patent Application Publication No. 5-76993, when the cross-sectional area of the slab is increased, in particular, when the thickness thereof is increased, at a casting speed of more than 1.5 m/min, the number of defects in the vicinity of the surface of the slab caused by inclusions or the like did not decrease as much as expected. The reason for this is that although a flow speed vm of molten steel at the meniscus portion is controlled to an optimum value by applying an electromagnetic force in the horizontal direction, throughput is increased as the slab thickness is increased, and a discharge speed vi from an immersion nozzle is increased when casting is performed at the same casting speed (Vc) and the same slab width (W) as those in the case in which the cross-sectional area is not increased. Accordingly, although the change in average value of the flow speed vm of molten steel is small, the change amount thereof is increased and, as a result, mold flux is increasingly engulfed in the molten steel. That is, it shows that the cleanness in the vicinity of the slab surface portion is not simply determined by the flow speed of molten steel in the vicinity of the meniscus.

**[0013]** In addition, the influence of a jet flow of molten steel from the immersion nozzle becomes significant and the growth of a shell is partly delayed along the short side of the mold. The reason for this is that, in the case of a slab continuous casting apparatus, when molten steel is discharged into a mold, since a so-called "two-spout nozzle" is used to supply the molten steel uniformly along the width direction of a casting space present in the mold, and a width d of the discharge spout of this two-spout nozzle is relatively small as compared to a short side length D (corresponding to the thickness of a slab) inside the mold, the flow speed of molten steel varies in the slab thickness direction. Hence, molten steel having a high flow speed unevenly collides against a part of the solidification shell along the short side and, as a result, the growth of the part of the solidification shell described above is delayed. In addition, the variation in flow speed of molten steel in the slab thickness direction is also partly responsible for variation in flow speed of molten steel in the vicinity of the meniscus described above.

**[0014]** Next, in the technique described in Japanese Unexamined Patent Application Publication No. 7-155902, in order to improve the slab surface quality, when a negative strip time T determined by the casting speed, the mold oscillation amplitude, and the oscillation frequency of the mold is controlled within a specific range by adjusting mold oscillation conditions, in particular, by decreasing the mold oscillation amplitude and by increasing the oscillation frequency of the mold, it was found that the following problems occur.

**[0015]** That is, when ultra-low-carbon steel is formed by casting at a casting speed of more than 2.0 m/min and a oscillation frequency of the mold of more than 185 cycles/min, although being not so frequently observed, an abnormal phenomenon occurs in which the molten steel surface level is suddenly and largely varied. As a result, mold flux may be engulfed in the molten steel or may be trapped in a solidification shell, thereby causing surface defects of cast steel sheets. Hence, surface defects are frequently generated on products which are caused by the mold flux when casting is performed at a casting speed of more than 2.0 m/min. As a result, there has been a problem that products having superior surface qualities are not stably obtained.

**[0016]** As apparent from the above descriptions, when a ultra-low-carbon steel slab used for forming outer plates of automobiles and the like is manufactured, in high-speed casting at a speed of more than 2.0 m/min, stable manufacturing of a high-quality slab cannot be performed as of today without carrying out slab conditioning such as scarfing.

**[0017]** It would therefore be advantageous to provide a continuous casting method for producing a ultra-low carbon steel slab in which the slab having superior surface quality without any slab conditioning such as scarfing can be stably obtained even at a high casting speed of more than 2.0 m/min.

## SUMMARY OF THE INVENTION

**[0018]** This invention provides a method for producing an ultra-low carbon steel slab including:

providing a continuous casting apparatus including a mold provided with a casting space having a short side length D of about 150 to about 240 mm and an immersion nozzle provided with at least one discharge spout having a lateral width d, in which a ratio D/d is in the range of from about 1.5 to about 3.0;
introducing molten steel into the mold through the immersion nozzle; and
casting the molten steel at a casting speed of more than about 2.0 mm/min with the continuous casting apparatus to produce a ultra-low carbon steel slab having a carbon content of about 0.01 mass percent or less.

**[0019]** The slab continuous casting method preferably further includes oscillating the mold at a frequency of about 185 cycles/min or less. The probability of occurrence of an abnormal phenomenon is suppressed in that the molten steel surface level is suddenly and largely varied. Hence, the number of defects caused by flux can be decreased since the rate of occurrence of the resonance between the oscillation of a molten steel surface and that of the mold decreases when the mold oscillation cycle is about 185 cycles/min or less.

**[0020]** The casting speed is preferably about 2.4 m/min or more. The nail depth becomes about 0.7 mm or less, that is, the thickness for trapping foreign materials becomes not more than the nail depth when the casting speed is about 2.4 m/min or more. Hence, the casting speed is preferably set to about 2.4 m/min or more.

**[0021]** As the immersion nozzle described above, a cylindrical nozzle (so-called "straight nozzle") or a two-spout nozzle in which the front end is closed and two approximately circular discharge spouts are provided toward the two short sides of the mold are generally used.

**[0022]** The ratio D/d of the short side length D to the lateral width d of the discharge spout of the immersion nozzle is preferably about 2.1 to about 2.9 when the slab thickness, immersion nozzle durability and the desired flow rate are taken into consideration in addition to the product quality.

**[0023]** The ultra-low carbon steel slab described above is preferably a starting material for a cold-rolled steel sheet used for forming outer plates of automobiles.

**[0024]** The slab continuous casting method described above preferably further includes applying a brake using an electromagnetic force to the flow of the molten steel in the casting space of the mold. The following paragraphs (A) to (C) may be mentioned as preferred methods for applying a brake using an electromagnetic force:

(A) Applying a brake using an electromagnetic force is performed by applying static magnetic fields to substantially the entire mold in the direction intersecting the mold thickness using an upper magnetic field application device and a lower magnetic field application device. The upper magnetic field application device is provided at an upper portion of the mold including the molten steel surface level in the mold and the lower magnetic field application device is provided at a lower side of the upper magnetic field application device. The immersion nozzle is disposed between the upper and the lower magnetic application devices, and the immersion depth is set to about 200 to about 350 mm.

(B) Applying a brake using an electromagnetic force is performed by superimposingly applying a static magnetic field and an AC magnetic field to the entire mold in the direction intersecting the mold thickness using a magnetic field application device provided at an upper portion of the mold including the molten steel surface level in the mold. The immersion nozzle is disposed below the magnetic field application device, and the immersion depth is set to about 200 to about 350 mm.

(C) Applying a brake using an electromagnetic force is performed by superimposingly applying a static magnetic field and an AC magnetic field to the entire mold in the direction intersecting the mold thickness using an upper magnetic field application device and, in addition, by applying a static magnetic field to the entire mold in the direction intersecting the mold thickness using a lower magnetic field application device. The upper magnetic field application device is provided at an upper portion of the mold including the molten steel surface level in the mold and the lower magnetic field application device is provided at a lower side of the upper magnetic field application device. The immersion nozzle is disposed between the upper and the lower magnetic application devices, and the immersion depth is set to about 200 to about 350 mm.

BRIEF DESCRIPTION OF THE DRAWINGS

**[0025]**

Fig. 1 is a graph showing the relationship between casting speed and nail depth according to aspects of the invention;
Fig. 2 is a graph showing the relationship between the trapping depth h from a slab surface and the number of trapped inclusions according to aspects of the invention, the relationship being obtained at different casting speeds;
Fig. 3 is a graph showing the relationship between distance L from the meniscus and the number of trapped inclusions, according to aspects of the invention, the relationship being obtained at different casting speeds;
Fig. 4 is a graph showing the influences of slab thickness and casting speed on a short-side bulging amount, according to aspects of the invention;
Fig. 5 is a graph showing the influence of slab thickness on the rate of surface defects of products according to aspects of the invention;
Fig. 6 is a graph showing the influence of casting speed on the rate of surface defects of products according to aspects of the invention;
Figs. 7A to 7C are schematic views each showing a continuous casting mold provided with a magnetic field application device, the mold being suitably used in accordance with aspects of the invention;
Fig. 8 is a schematic view showing an example of application of an AC oscillating magnetic field according to aspects of the invention; and
Fig. 9 is a schematic view showing an example of application of an AC travelling magnetic field according to aspects of the invention.

DETAILED DESCRIPTION

**[0026]** We discovered that slabs having ultra-low carbon content can be advantageously produced by appropriately controlling the casting speed, the short side length D of the casting space of a continuous casting mold, and the ratio D/d of the short side length D to a lateral width d of a discharge spout of an immersion nozzle in addition to, whenever necessary, appropriate control of oscillation frequency of the mold, or effective use of an electromagnetic brake on a molten steel flow.

**[0027]** A type of steel in accordance with aspects of the invention is so-called "ultra-low-carbon steel" having a carbon content of about 0.01 mass percent or less. Components other than C are not particularly limited. However, a type of steel which can be suitably processed by deep drawing for forming outer plates of automobiles or the like is preferred. An advantage of the invention is that, for steel used in applications with substantially no defects caused by inclusions, inclusions are substantially not allowed to be present in the region from the surface of a slab to a certain depth therefrom, which region is not to be scaled off in a subsequent step. Ultra-low-carbon steel may receive most advantages of the invention since, in the ultra-low carbon steel, non-metallic inclusions such as alumina are liable to be generated as deoxidation reaction products in the refining process.

**[0028]** As a typical composition (not including component C) of ultra-low-carbon steel, the following may be mentioned by way of example: about 0.01 to about 0.04 mass percent of Si, about 0.08 to about 0.20 mass percent of Mn, about 0.008 to about 0.020 mass percent of P, about 0.003 to about 0.008 mass percent of S, about 0.015 to about 0.060 mass percent of Al, about 0.03 to about 0.080 mass percent of Ti, about 0.002 to about 0.017 mass percent of Nb, and 0 to about 0.0007 mass percent of B.

**[0029]** The continuous casting apparatus used in accordance with the invention is a continuous casting apparatus for forming a steel slab and may be optionally selected from a vertical continuous casting apparatus, a vertical bending continuous casting apparatus and a curved continuous casting apparatus. However, among those mentioned above, a vertical bending continuous casting apparatus is particularly advantageous in consideration of productivity and product quality.

**[0030]** The mold is a so-called "slab continuous casting mold," and the short side length thereof is about 150 to about 240 mm. The long side length of the mold is not particularly limited and is preferably substantially equivalent to the length of an ordinary cold-rolled steel sheet (in particular, a cold-rolled steel sheet for automobiles), such as approximately 900 to 2,200 mm. The short side length corresponds to the slab thickness when the slab is formed and the long side length corresponds to a slab width.

**[0031]** The height of the mold in the vertical direction is not particularly limited. However, since a solidification shell is formed having a certain thickness so that a cast steel sheet passing through the mold does not bulge even when casting is performed at a casting speed of more than 2.0 m/min, the height is preferably set to approximately 800 to approximately 1,000 mm.

**[0032]** An immersion muzzle is used as the nozzle for supplying molten steel into the casting space of the mold from

a tundish. The material for the immersion nozzle may be a commonly used material such as alumina-graphite. However, the material is not only limited thereto.

**[0033]** In addition, as the shape of the immersion nozzle, there may be generally mentioned a cylindrical nozzle (so-called "straight nozzle") or a two-spout nozzle in which the front end is closed and two approximately circular discharge spouts are provided toward the two short sides of the mold. The cross-sectional shape of the discharge spout may be circular, square, or rectangular (longer in a lateral direction, or longer in a longitudinal direction) and is not particularly limited, and any type of shape may be used as long as the maximum width d of the discharge spout satisfies the conditions of the invention.

**[0034]** Furthermore, the casting speed is set to more than about 2.0 m/min for the reasons described later. The casting speed is more preferably set to about 2.4 m/min or more.

**[0035]** When a brake is applied using an electromagnetic force to the flow of molten steel in the casting space of the mold of the continuous casting apparatus, as a preferable method therefor, for example, there may be mentioned a method in which a static magnetic field is applied to the entire mold along the long-side width as disclosed in Japanese Unexamined Patent Application Publication No. 2-284750, or a method in which a static magnetic field is applied only to a discharge position of molten steel as disclosed in Japanese Unexamined Patent Application Publication No. 57-17356. The subject matter of both of JP 2-284750 and JP 57-17356 is incorporated herein by reference.

**[0036]** Various phenomena occur in the mold when casting is performed in accordance with the invention under conditions in which the short side length (slab thickness) of the casting space of the mold is set to about 150 to about 240 mm and the casting speed is set to more than about 2.0 m/min. Subsequently, novel findings relating to the phenomena mentioned above will be described. Hereinafter, inclusions, bubbles, and the like will be called "foreign materials."

(1) Reduction in Area of Trapping Foreign Materials

**[0037]** Formation of an initial solidification shell at the meniscus portion, which is a so-called "nail", can be significantly suppressed when the casting speed Vc is set to more than about 2.0 m/min or preferably set to about 2.4 m/min or more. We believe the reason for this is that since the thickness of a solidification shell formed at an optional constant depth from a molten steel surface level is decreased as the casting speed Vc is increased, due to the influence of a static pressure of molten steel, a force applied toward the mold side becomes larger than a force of the nail leaning toward the molten steel side caused by thermal contraction of the solidification shell which depends on the thickness thereof. In addition, when the slab thickness is decreased, the absolute value of the amount of shell contraction in the thickness direction represented by "slab thickness x temperature difference x coefficient of thermal expansion" is decreased, the leaning of the shell toward the molten steel side is further suppressed and, as a result, the effect of suppressing the leaning of the nail becomes more significant.

**[0038]** In Fig. 1, the influence of the casting speed on the nail depth is shown. The nail depth becomes 1 mm or less when the casting speed is more than about 2.0 m/min and the short side length (slab thickness) of the casting space of the mold is about 240 mm or less. In addition, the nail depth becomes about 0.7 mm or less when the casting speed is about 2.4 m/min or more.

(2) Suppression of Adsorption of Foreign Materials

**[0039]** Concomitant with solidification, due to segregation of a solute concentrated at the interface of the solidification shell, the gradient of surface tension is generated and, because of a force caused by this gradient, a phenomenon is generated in which foreign materials are likely to be adsorbed or trapped on the interface of the solidification shell. Hence, an attempt has been carried out in which the concentration of S or Ti is decreased which has a particularly significant influence as a solute element of enhancing a force adsorbing and trapping foreign materials. However, in some cases, manipulation of components may disadvantageously cause increase in cost when S is decreased and degradation in quality when Ti is decreased.

**[0040]** According to the invention, the force of adsorbing and trapping foreign materials on the interface of the solidification shell is suppressed by increasing the casting speed Vc. That is, when the casting speed Vc is high, such as more than about 2.0 m/min, since the solidification amount at the meniscus portion is decreased, the segregation amount is also decreased. Hence, the gradient of surface tension, which functions as a force of attracting foreign materials, is also decreased. As a result, the amount of foreign materials adsorbed and trapped at the solidification shell side is also reduced.

(3) Reduction in Thickness of Trapping Foreign Materials

**[0041]** Fig. 2 shows the relationship in a surface portion of the slab between a trapping depth h from the slab surface

at which foreign materials are trapped and the number of trapped foreign materials. In addition, Fig. 3 shows the relationship between the number of trapped foreign materials and a distance L from the meniscus (the surface of molten steel) which is obtained by converting the trapping depth h from the slab surface. The conversion is performed in accordance with the following equation:

$$h = k(L/Vc)^{1/2}$$

In this equation, Vc indicates the casting speed, and a solidification constant k is 20 mm·min$^{-1/2}$.

**[0042]** Foreign materials are trapped by the shell in a region from the molten steel surface to a depth of 20 mm as can be seen from Figs. 2 and 3. In addition, the trapping depth is decreased as the casting speed is increased, and at a casting speed Vc of more than 2.0 m/min, the trapping depth h from the slab surface is 1 mm or less.

**[0043]** When the trapping depth h is 1 mm or less, although foreign materials are trapped by the shell, in a subsequent process forming products through a hot rolling step and a cold rolling step, the foreign materials are scraped off and removed together with oxide scales formed on the surface of a cast steel sheet. Accordingly, a defect-free product can be obtained without performing slab conditioning. In addition, the nail depth becomes 0.7 mm or less, that is, the trapping thickness h also becomes not more than the nail depth when the casting speed is about 2.4 m/min or more. Hence, the casting speed is more preferably set to about 2.4 m/min or more.

(4) Reduction in Probability of Trapping Foreign Materials

**[0044]** The residence time of the solidification shell in the region from the molten steel surface to a depth of 20 mm in which foreign materials are likely to be trapped by the solidification shell decreases as the casting speed increases. Accordingly, the probability of trapping foreign materials by the solidification shell decreases even when the same amount of foreign materials is present floating in molten steel. For example, when Vc is 3.0 m/min, the trapping probability decreases to one half of that when Vc is 1.5 m/min.

(5) Preferable Oscillation Frequency of Mold for Prevention of Sudden Variation of Molten Steel Surface Level

**[0045]** When casting in preformed at a casting speed Vc of more than about 2.0 m/min, since the thickness of the solidification shell in the mold further decreases, although being not so apparent, a bulging phenomenon is generated. The bulging phenomenon is a phenomenon in which the solidification shell is pushed toward the mold side by the influence of the static pressure of molten steel. In this bulging phenomenon, when the temperature of the shell is high, and when a type of steel is a ultra-low carbon steel or the like having a small shell strength as compared to that of other types of steel, the bulging (being pushed to the mold) speed becomes higher than the oscillation speed of the mold. When a mold generally having a taper to compensate for volume contraction caused by solidification contraction and/or thermal contraction is oscillated vertically, the solidification shell bulges by a bulging amount $\delta_b$ concomitant with the descent of the mold. On the contrary, concomitant with the ascent of the mold, the mold pushes the shell thus bulged by a pushing force of $\delta_p$ which is approximately equivalent to $\delta_b$. When being simply calculated, the change in molten steel surface level caused by this change of volume is small, such as less than about 1 mm. However, when the phenomenon described above is repeatedly performed, the oscillation of molten steel surface level and the oscillation of the mold may resonate with each other. As a result, an abnormal phenomenon may occur in rare cases in which the molten steel surface level suddenly and largely varies. It has been difficult to detect this phenomenon using an ordinary eddy-current type level sensor for molten steel surface since this abnormal phenomenon occurs at the edge portion of the mold. However, we first discovered this phenomenon by investigation of the distortion of an oscillation mark of a cast steel slab with time. In particular, when the casting speed is more than about 2.0 m/min and the oscillation frequency of the mold is high, such as more than about 185 cycles/min, this abnormal phenomenon described above is likely to be observed. As a result, mold flux may be engulfed in the molten steel and may be trapped in the solidification shell, thereby causing defects in the surface portion of the cast steel sheet. Accordingly, in the case of casting at a casting speed of more than about 2.0 m/min, the number of surface defects in the product caused by the mold flux is suddenly increased. As a result, it has been difficult to decrease the surface defects.

**[0046]** However, from the relationship between the oscillation frequency of the mold and the ratio of the flux-related defects to the total defects, the ratio being used as the index showing the rate of occurrence of the sudden abnormal phenomenon, it was found that when the oscillation frequency of the mold is set to about 185 cycles/min or less, the abnormal phenomenon as described above can be effectively prevented even when the casting speed Vc is more than about 2.0 m/min.

**[0047]** In addition, the lower limit of the oscillation frequency of the mold may be set in view of reduction in area of trapping foreign materials so as not to increase the nail depth and also in view of prevention of restraint breakout

caused by the decrease in lubricant properties (consumption amount of mold flux) in the mold. For example, it is preferable that a negative strip time is about 0.02 seconds or more and that a negative strip length is about 0.1 mm or more. The negative strip time is one characteristic value for defining the mold oscillation conditions and indicates a period of time in which the descending speed of the mold is higher than that of the cast steel slab. The negative strip length indicates the maximum distance between the mold and the cast steel slab within the negative strip time, the mold passing by the cast steel slab which is being drawn. $\pi Sf/Vc>1$ is satisfied when the oscillation waveform of the mold is assumed to have a sine waveform wherein S indicates the oscillation stroke of the mold, f indicates the mold frequency, and Vc indicates the casting speed. For example, when Vc is 2.0 m/min and S is 9 mm, the lower limit of the mold frequency f is 71 cpm (cycles/minute), and when S is 5 mm, the lower limit is 127 cpm. It is not necessary that the oscillation waveform of the mold be limited to a sine waveform. Also, in consideration of the specification of oscillation conditions of the continuous casting apparatus and the controllability thereof, the lower limit of the frequency and the waveform may be appropriately determined.

(6) Prevention of Short-Side Bulging (Reason for Upper Limitation of Short Side Length of Casting Space of Mold)

**[0048]** Although an immersion nozzle is used which satisfies the ratio D/d of the short side length (slab thickness) D of the casting space of the mold to the lateral width d of the discharge spout of the immersion nozzle, when the short side length is too large, in casting at a casting speed Vc of more than abut 2.0 m/min, problems occur. Particularly, slab shape-related defects and/or breakout are generated by short-side bulging. On the contrary, when the short side length is small, and when the casting speed Vc is high, the bulging of the short side of the slab passing through the mold, which is caused by a static pressure of molten steel, can be suppressed, and the risk of breakout generation is small.

**[0049]** However, as shown in Fig. 4, when the short side length (that is, the slab thickness) is more than 240 mm, although the casting speed is 2.4 m/min, by the increase in jet flow speed of the molten steel from the discharge spout of the immersion nozzle due to the increase in slab thickness, a secondary flow speed is increased by application of an electromagnetic brake. It becomes difficult to suppress the delay of growth of a shell along the short side as a result. Accordingly, short-side bulging at the bottom end of the mold becomes apparent and the risk (bulging amount of 10 mm or more) of breakout generation increases.

**[0050]** In addition, when the short side length (that is, the slab thickness) is more than 240 mm, by the same reason as that described above, since the fluctuation of the molten steel surface level is facilitated by an inversion flow and a secondary flow of the jet flow of the molten steel, which flows are from the short sides of the solidification shell, engulfment and trapping of mold flux are liable to occur. In addition, due to the increase in slab thickness, stagnation of molten steel at the meniscus portion, particularly, in the vicinity of the immersion nozzle, is liable to occur. As a result, as shown in Fig. 5, the number of slab surface defects and that of the product defects increases.

(7) Reason for Lower Limitation of Short Side Length of Casting Space of Mold

**[0051]** It is not preferred that the short side length (slab thickness) of the casting space of the mold is less than about 150 mm, for the following reasons.

**[0052]** The above effect (1) cannot be obtained in view of controllability of molten steel surface level when the cross-sectional area of the slab excessively decreases. The reason for this is that when the casting amount is changed, the fluctuation in molten steel surface level increases as compared to the case in which a slab having a large cross-sectional area is formed. Also, due to the formation of molten steel ripples thereby, the rate of generation of nails having a depth of 1 mm or more is increased. In addition, engulfment and trapping of mold flux are liable to occur (see Fig. 5) due to the fluctuation in molten steel surface level. Furthermore, the outer diameter of an ordinary immersion nozzle is determined by the sum of the wall thickness (about 20 mm or more) determined in consideration of durability and the inside diameter (about 70 to about 130 mm) determined to ensure a throughput of from 5.4 ton/min (150 mm thick, 2,200 mm wide, and Vc of 2.1 m/min or more) to 14.5 ton/min (240 mm thick, 2,200 mm wide, and Vc of 3.5 m/min or more). In this case, when the short side length (slab thickness) D is excessively small, the distance between the outer wall of the immersion nozzle and the long side of the solidification shell becomes too small (less than 20 mm), the flow therebetween becomes non-uniform, thereby resulting in generation of longitudinal cracks. In an extreme case, the solidification shell is brought into contact with the nozzle and is bonded thereto, resulting in breakout generation. Hence, the short side length (slab thickness) D is set to not less than about 150 mm (inside diameter of 70 mm + total outer wall thickness of 40 mm ($20 \times 2$) + distance between the outer wall of the immersion nozzle and the long side of the solidification shell of 40 mm ($20 \times 2$)).

**[0053]** In addition, the long side length (slab width) of the casting space of the mold is not particularly limited and may be equivalent to the width of an ordinary cold-rolled steel sheet (in particular, cold-rolled steel sheet for automobiles). A length of approximately 900 to 2,200 mm is preferred.

**[0054]** The height in the vertical direction of the mold is not particularly limited. However, the height is preferably set to approximately 800 to 1,000 mm since a solidification shell must be formed having a certain thickness so that a cast steel slab passing through the mold is not bulged even when casting is performed at a casting speed of more than about 2.0 m/min.

(8) Optimization of Ratio D/d of Short Side Length D of Casting Space of Mold to Lateral Width d of Discharge Spout of Immersion Nozzle

**[0055]** While being decelerated, the molten steel jetted out of the discharge spout of the immersion nozzle extends its width until it collides against the short side shell. However, the degree of deceleration and distribution of the jet flow speed of the molten steel which collides against the short side shell depend on the slab width W, the casting speed Vc, and the D/d ratio. When the width d of the discharge spout of the immersion nozzle is too small (D/d is too large) with respect to the short side length (slab width) D of the casting space of the mold, as D, Vc and W increase, and the ratio of a regional width in which molten steel having a high flow speed collides against the short side shell to the slab thickness (short side width) decreases. Hence, growth of the solidification shell becomes non-uniform and is liable to be interfered with. Also, breakout may occur in some cases when the thickness of the solidification shell is extremely decreased. On the other hand, when the width d of the discharge spout of the immersion nozzle is too large (D/d is too small) with respect to the short side length (slab width) D of the casting space of the mold, as D, Vc, and W increase, the growth of the long side of the solidification shell is interfered with since the jet flow of the molten steel collides against the long side of the solidification shell before it collides against the short side thereof, thereby resulting in generation of transversal cracks and/or oblique cracks. In addition, breakout may also occur in some cases when the thickness of the solidification shell is extremely decreased. In both cases described above, the influence of the slab width is hardly observed.

**[0056]** In addition, in the case in which the molten steel collides against the short side of the solidification shell, ascends, and then flows along the molten steel surface at the long side, when the ratio D/d is out of the optimum range due to the variation in flow speed of the molten steel in the slab thickness direction, the variation of the flow speed in the vicinity of the meniscus may be partly influenced thereby, and the amount of engulfed mold flux increases.

**[0057]** The maximum width d of the discharge spout which is determined to ensure a throughput of about 5.4 to about 14.5 ton/min is preferably equal to or smaller than the inside diameter (70 to 130 mm) of the immersion nozzle in view of durability thereof. Accordingly, the ratio D/d is determined in consideration of the optimum short side length (slab thickness) D (150 to 240 mm) of the casting space of the mold and the width d (70 to 130 mm) of the discharge spout. In the case in which long-period casting for 300 minutes or more is carried out, the total outer wall thickness is preferably set to 25 mm $\times$ 2 = 50 mm or more. In addition, the distance between the mold and the nozzle is preferably set to 40 mm or more to ensure a more stable quality. That is, the required thickness other than the inside diameter is 50 + 40 $\times$ 2 = 130 mm. On the other hand, in the case of short-period casting, the total outer wall thickness may be set to 20 mm $\times$ 2 = 40 mm, and the distance between the mold and the nozzle may be set to approximately 20 mm. That is, the thickness other than the inside diameter is 40 + 20 $\times$ 2 = 80 mm.

**[0058]** In Table 1, the investigation results of the influence of the ratio D/d to the product quality are shown. The ratio D/d is preferably in the range of from 1.5 to 3.0. However, the ratio is more preferably in the range of from about 2.1 to about 2.9 when the optimum slab thickness, the durability of the immersion nozzle and the required flow rate are also taken into consideration.

TABLE 1

| No. | SLAB THICK-NESS D (mm) | SLAB WIDTH W (mm) | CASTING SPEED Vc (m/mim) | LATERAL WIDTH OF DISCHARGE SPOUT OF IMMERSION NOZZLE d (mm) | D/d | MOLD STROKE S (TOTAL AMPLI-TUDE) (mm) | OSCILLA-TION FREQUENCY OF MOLD f (TIMES/min) | tn* (s) | ELECTRO-MAGNETIC BRAKE | NUMBER OF SLAB SURFACE CRACKS (≥5mm) (/m²) | RATE OF SURFACE DEFECTS OF COLD-ROLLED STEEL SHEET (%) | GENERA-TION OF BREAKOUT | REMARKS |
|---|---|---|---|---|---|---|---|---|---|---|---|---|---|
| 1 | 220 | 1100-1800 | 2.4 | 60 | 3.67 | 7 | 160 | 0.098 | TYPE 1 | 65 | 2.1 | BO AT SHORT SIDE | COMP. EX. |
| 2 | 220 | 1100-1800 | 2.4 | 70 | 3.14 | 7 | 160 | 0.098 | TYPE 1 | 23 | 0 | NO | COMP. EX. |
| 3 | 220 | 1100-1800 | 2.4 | 75 | 2.93 | 7 | 160 | 0.098 | TYPE 1 | 0 | 0 | NO | EXAMPLE |
| 4 | 220 | 1100-1800 | 2.4 | 80 | 2.75 | 7 | 160 | 0.098 | TYPE 1 | 0 | 0 | NO | EXAMPLE |
| 5 | 220 | 1100-1800 | 2.4 | 130 | 1.69 | 7 | 160 | 0.098 | TYPE 1 | 5 | 0 | NO | EXAMPLE |
| 6 | 235 | 1100-1800 | 2.4 | 88 | 2.67 | 7 | 160 | 0.098 | TYPE 2 | 0 | 0 | NO | EXAMPLE |
| 7 | 235 | 1100-1800 | 2.4 | 100 | 2.35 | 7 | 160 | 0.098 | TYPE 2 | 0 | 0 | NO | EXAMPLE |
| 8 | 235 | 1100-1800 | 2.4 | 120 | 1.96 | 7 | 160 | 0.098 | TYPE 2 | 1 | 0 | NO | EXAMPLE |
| 9 | 235 | 1100-1800 | 2.4 | 160 | 1.47 | 7 | 160 | 0.098 | TYPE 2 | ≥100 | 23.5 | BO AT LONG SIDE | COMP. EX. |

TYPE 1: EMBR TYPE 2: EMLS *$tn=60/f-tp$ $tp=60/(\pi Sf) \times acos(-1000Vc/\pi Sf)$ COMP. EX.: COMPARATIVE EXAMPLE

(9) Braking of Flow by Electromagnetic Force

**[0059]** When the casting speed Vc is about 2.4 m/min or more, or the throughput is about 7 ton/min or more, although the D/d is optimized, the increase in rate of product defects is slightly observed.

**[0060]** In the case described above, it is preferred that braking the flow with an electromagnetic force be additionally performed, and by this braking of the flow, more stable operation and improvement in quality can be achieved.

**[0061]** As a method for braking the flow using an electromagnetic force, techniques disclosed in Japanese Unexamined Patent Application Publication Nos. 2-284750 and 57-17356 are preferably used as described above.

**[0062]** In Figs. 7A to 7C, continuous casting molds each provided with a magnetic field application device, which are suitably used for this invention, are schematically shown.

**[0063]** Fig. 7A shows magnetic application devices 1 disposed at an upper portion of the mold including the molten steel surface level and at a predetermined distance thereunder for applying static magnetic fields in two stages. Fig. 7B shows a magnetic application device 2 is disposed only at an upper portion of the mold including the molten steel surface level for superimposingly applying a static magnetic field and an AC magnetic field. Fig. 7C shows the magnetic application device 2 is disposed at an upper portion of the mold including the molten steel surface level for superimposingly applying a static magnetic field and an AC magnetic field and the magnetic application device 1 is disposed at a predetermined distance under the magnetic field application device 2 for applying a static magnetic field.

**[0064]** Of the various magnetic field application devices described above, the magnitude (magnetic flux density) of a DC magnetic field is preferably set to approximately 1,000 to approximately 7,000 gausses when the magnetic field application device for applying a static magnetic field is used. The value mentioned above may be applied in both cases in which two devices are provided at the upper and the lower positions and in which only one device is provided at the lower position.

**[0065]** As the AC magnetic field, there are two types, that is, an AC oscillating magnetic field and an AC travelling magnetic field, and in the invention, both of them are preferably used.

**[0066]** Fig. 8 shows the AC oscillating magnetic field is a magnetic field in which AC currents having phases practically opposite to each other are applied to coils adjacent to each other or a magnetic field in which AC currents having the same phase are applied to coils having coiling directions opposite to each other so as to practically invert a magnetic field generated in the adjacent coils. A local flow can be induced in molten steel in the mold when this AC oscillating magnetic field is superimposed on the DC magnetic field. In the figures, reference numeral 3 indicates a DC coil, reference numeral 4 indicates an AC coil, reference numeral 5 indicates a mold, and reference numeral 6 indicates molten steel (portion shown by oblique lines is a slow flow region).

**[0067]** In addition, the AC travelling magnetic field is a magnetic field obtained when AC currents having phases shifted by 360°/N are applied to N pieces of adjacent optional coils. In general, as shown in Fig. 9, N = 3 (a phase difference of 120°) is used since a high efficiency can be obtained. Also as described above, a local flow can be induced in molten steel in the mold when this AC travelling magnetic field is superimposed on the DC magnetic field.

**[0068]** The magnetic flux density of the AC magnetic field is preferably set to approximately 100 to approximately 1,000 gausses when the magnetic field application device for applying an AC magnetic field as described above is used, and the frequency of the oscillating magnetic field is preferably set to approximately 1 to approximately 10 Hz.

**[0069]** Furthermore, the magnitude of a DC magnetic field is preferably set to approximately 1,000 to approximately 7,000 gausses, and the magnetic flux density of an AC magnetic field is preferably set to approximately 100 to approximately 1,000 gausses when the magnetic field application device for superimposingly applying a static magnetic field and an AC magnetic field is used.

**[0070]** Continuous casting is preformed while the molten steel flow is braked by an electromagnetic force using the magnetic field application device as described above. Hereinafter, novel findings in the continuous casting as described above on the phenomena generated in the mold will be described together with reasons for limiting the manufacturing conditions of the invention.

(10) Nozzle Immersion Depth (Distance from Molten Steel Surface to Upper End of Discharge Spout)

**[0071]** The state of a circulation flow of molten steel in the mold is varied in accordance with the change in nozzle immersion depth. In particular, the immersion depth is optimized since the flow speed from the immersion nozzle is high when the casting speed is high. That is, the flow speed of molten steel at the surface thereof becomes too high when the immersion depth is too small. Engulfment of flux is facilitated as a result. On the other hand, when the depth is too large, since the flow speed of molten steel at the surface thereof is decreased too much, the effect of washing the interface of the solidification shell decreases. Trapping of bubbles and inclusions is facilitated as a result.

**[0072]** Accordingly, in consideration of the states described above, when the optimum value of the nozzle immersion depth was investigated, it was found that the nozzle immersion depth is set in the range of from about 200 mm to about 350 mm.

**[0073]** In addition, as a material for the immersion nozzle as described above, for example, ordinary alumina-graphite is preferably used. However, the material is not limited thereto.

**[0074]** As the immersion nozzle described above, a cylindrical nozzle or a two-spout nozzle in which the front end is closed and two approximately circular discharge spouts are provided toward the two short sides of the mold may be generally used. The cross-sectional shape of the discharge spout may be circular, square, or rectangular (longer in a lateral direction, or longer in a longitudinal direction) and is not particularly limited, and any type of shape may be used as long as the maximum width d satisfies the conditions of the invention described later.

**[0075]** As has thus been described, engulfment of mold flux is prevented by the above paragraphs (5), (6), and (8) as small as possible, trapping of foreign materials into the solidification shell is suppressed by the above paragraphs (2) and (4) even when flux is engulfed or inclusions are floating in the molten steel, and even if foreign materials are trapped, the depth from the solidification shell surface at which foreign materials are trapped is made smaller by the above paragraphs (1) and (3) so as not to cause defects. Accordingly, in a process for forming products, in particular, in a slab heating step, scaling-off and removal of foreign materials from the surface layer of the slab can be facilitated.

**[0076]** Hence, the effect described above can be stably achieved by the above paragraphs (6), (7), (8), and (9) while high productivity is obtained.

Example 1

**[0077]** By using continuous casting apparatuses having molds provided with casting spaces having various short side lengths, various types of slabs having slab thickness of 110 mm (by a test continuous casting apparatus), 200, 215, 220, 235, and 260 mm (by a vertical-bending production continuous casting apparatus), and having slab widths of 400 mm (by the test continuous casting apparatus), and 900 to 2,200 mm (by the vertical-bending production continuous casting apparatus) were prepared under the conditions shown in Table 2A and 2B by casting. In that step, the heights of the molds were 900 mm (by the production continuous casting apparatus) and 700 mm (by the test continuous casting apparatus), and the immersion nozzle was a two-spout nozzle made of alumina-graphite having a wall thickness of 25 mm, the shape of the discharge spout being square (when the slab thickness is 220 mm or less) or circular (when the slab thickness is more than 220 mm), the downward discharge angle being at a constant value of 20°, and the nozzle immersion depth (the distance from the molten steel surface to the upper end of the discharge spout) being set to 200 to 250 mm. As mold flux, a material was used having a solidification temperature of 1,000°C, a viscosity of 0.05 to 0.2 Pa·s (0.5 to 2.0 poise) at 1,300°C, and a basicity ($CaO/SiO_2$) of 1.0. In addition, the degree of superheat for molten steel in a tundish was set to 10 to 30°C. Furthermore, components of molten steel, which had a ultra-low carbon steel composition, were 0.0005 to 0.0090 mass percent of C, less than 0.05 mass percent of Si, less than 0.50 mass percent of Mn, less than 0.035 mass percent of P, less than 0.020 mass percent of S, 0.005 to 0.060 mass percent of Al, less than 0.080 mass percent of Ti, less than 0.050 mass percent of Nb, and less than 0.0030 mass percent of B. In addition, the mold oscillation waveform was a sine waveform.

**[0078]** The maximum short-side bulging amount, the maximum nail depth, the maximum number of slab surface defects and generation of breakout were measured for the various types of slabs thus formed. The results thereof are shown in Table 3. The maximum short-side bulging amount is preferably 10 mm or less, more preferably 5 mm or less. The maximum nail depth is preferably 1 mm or less, more preferably 0.7 mm or less.

**[0079]** In addition, in Table 3, the results of measurement of rate of surface defects of a cold-rolled steel sheet (sheet thickness of 0.8 mm) are also shown, the cold-rolled steel sheet being obtained by the steps of heating each of the above slabs at a temperature of 1,100 to 1,200°C for 2 to 2.5 hours, followed by hot rolling, cold rolling, and finish annealing in accordance with an ordinary process.

**[0080]** Furthermore, investigation on the influence of the casting speed on the slab surface defects and on the surface defects of the cold-rolled steel sheet was summarized. The results thereof are shown in Fig. 6.

**[0081]** The maximum number of slab surface defects was the number (pieces/$m^2$) of bubbles (a diameter of 0.2 mm or more), alumina clusters (a diameter of 500 μm or more), and slag (including mold flux, a diameter of 0.5 mm or more) per unit area observed after the following sequential steps of milling the slab surface by 1 mm, performing polishing using emery paper #1000, and performing etching using a mixed solution of hydrochloric acid and hydrogen peroxide.

**[0082]** In addition, the rate of surface defects of a cold-rolled steel sheet was the ratio, on a percent basis, of the number of defects, such as scratches and spills, caused by casting with respect to the total defects, the number of defects being measured on the front and the rear surfaces per 1,000 m of a cold-rolled steel sheet.

**[0083]** The generation of breakout was defined as "Yes" when even at least one breakout occurred in casting under each of the individual conditions.

**[0084]** In addition, "Type 1" described as an electromagnetic brake indicates static magnetic field application (EMBR) performed for the entire mold at the vicinity of the bottom end of the mold, "Type 2" described as an electromagnetic brake indicates static magnetic field application (EMLS) performed for the entire mold at the discharge spout of the

immersion nozzle, and the "Type 1" and "Type 2" were preformed based on the techniques disclosed in Japanese Unexamined Patent Application Publication Nos. 2-284750 and 57-17356, respectively.

**[0085]** The negative strip time tn is one characteristic value for defining the mold oscillation conditions and indicates a period of time in which the descending speed of the mold is higher than that of a cast steel sheet. As can be seen from Table 3 and Fig. 6, when a slab is formed by casting in accordance with the invention, even when the casting speed is high, such as more than about 2.0 m/min, the degree of surface defects of the slab thus formed was slight, and surface defects of a cold-rolled steel sheet formed therefrom were not substantially detected, or even when the defects are present, the number thereof was very small.

**[0086]** As can be seen from the example described above, in accordance with the invention, the operation conditions are preferably optimized so that the following states can achieved:

(1) the relative pushing force toward the mold wall by static pressure of the molten steel increases which is applied to a shell solidified in the vicinity of the molten steel surface in the mold,
(2) the phenomenon of adsorbing inclusions, slag, flux and bubbles on the interface of the solidification shell is suppressed, and the probability of trapping foreign materials decreases, and
(3) the depth of trapping foreign materials into the solidification shell decreases as much as possible.

**[0087]** Accordingly, even when casting is performed at a high speed, such as more than about 2.0 m/min, while high productivity and stable operation are being maintained, a high-quality slab for a cold-rolled steel sheet used for forming outer plates of automobiles can be supplied without slab surface treatment.

Example 2

**[0088]** Molten steel (approximately 300 tons), which was obtained by melting in a converter followed by RH treatment, was formed into a slab by continuous casting using a continuous casting apparatus provided with one of the magnetic field application devices shown in Figs. 7A to 7C, the molten steel having a composition containing 0.0015 mass percent of C, 0.02 mass percent of Si, 0.08 mass percent of Mn, 0.015 mass percent of P, 0.004 mass percent of S, 0.04 mass percent of Al, 0.04 mass percent of Ti, and the balance being Fe and inevitable impurities. The manufacturing conditions in this example are shown in Table 2. As the immersion nozzle, a two-spout immersion nozzle was used having rectangular discharge spouts each provided with a downward discharge angle of 15°.

**[0089]** Subsequently, surface segregation and the amount of non-metallic inclusions of the slab thus formed and surface defects caused by mold flux after cold rolling were measured. The results thereof are shown in Table 3.

**[0090]** Surface segregation was evaluated by visual inspection from the number of segregations per 1 $m^2$ after the steps of slab polishing and etching were performed. In addition, the non-metallic inclusions were extracted by slime extraction from part of the cast steel sheet located at a depth of one fourth of the thickness from the surface thereof. Subsequently, the weight of the inclusions was measured. Furthermore, the surface defects of a coil formed by cold rolling were checked by visual inspection and then sampled, followed by analysis. The number of defects caused by mold flux was obtained. To reduce surface segregation, the amount of inclusions, and the number of defects caused by mold flux to index numbers for purposes of comparison, the worst result obtained among all the conditions was regarded as an index number of 10. Each result was represented by the ratio to the worst result based on the assumption that the linear relationship was satisfied therebetween.

**[0091]** As can be seen from Table 3, in accordance with the invention, when the casting speed, the short side length D of the casting space of the mold, the nozzle immersion depth, the ratio D/d of the short side length D to the lateral width d of the discharge spout of the immersion nozzle were appropriately controlled together with appropriate application of an electromagnetic brake to the flow of the molten steel in the mold, the number of the surface segregations, the amount of non-metallic inclusions, and the number of the defects caused by mold powder could be reduced.

**[0092]** When the intensity of the oscillating magnetic field is too high, engulfment of flux at the molten steel surface increased, resulting in degradation in surface quality. In addition, when the frequency is too high, the molten steel surface level cannot follow the magnetic field, and the effect of washing the interface of the solidification shell decreases, thereby resulting in increase in number of bubbles and inclusion defects.

TABLE 2A

| No. | SHORT SIDE LENGTH (SLAB THICKNESS) D (mm) | SLAB WIDTH W (mm) | | CASTING SPEED Vc (m/min) | THROUGHPUT OF MOLTEN STEEL (ton/min) | | LATERAL WIDTH OF DISCHARGE SPOUT OF IMMERSION NOZZLE d (mm) | D/d | MOLD STROKE S (TOTAL AMPLITUDE) (mm) | OSCILLATION FREQUENCY OF MOLD ( TIMES /min ) | Tn* (s) |
|---|---|---|---|---|---|---|---|---|---|---|---|
| | | MINIMUM | MAXIMUM | | MINIMUM | MAXIMUM | | | | | |
| 1 | 220 | 900 | 1950 | 1.0 | 1.6 | 3.4 | 80 | 2.75 | 6 | 120 | 0.177 |
| 2 | 220 | 900 | 1950 | 1.5 | 2.3 | 5.1 | 80 | 2.75 | 6 | 130 | 0.134 |
| 3 | 220 | 900 | 1950 | 1.8 | 2.3 | 6.1 | 80 | 2.75 | 6 | 150 | 0.112 |
| 4 | 220 | 900 | 1950 | 2.0 | 3.1 | 6.7 | 80 | 2.75 | 6 | 185 | 0.099 |
| 5 | 220 | 900 | 1950 | 2.1 | 3.3 | 7.1 | 80 | 2.75 | 5 | 170 | 0.075 |
| 6 | 220 | 900 | 1950 | 2.2 | 3.4 | 7.4 | 80 | 2.75 | 5 | 180 | 0.072 |
| 7 | 220 | 1200 | 1950 | 1.5 | 3.1 | 5.1 | 80 | 2.75 | 9 | 190 | 0.129 |
| 8 | 220 | 1200 | 1950 | 1.8 | 3.7 | 6.1 | 80 | 2.75 | 9 | 190 | 0.124 |
| 9 | 220 | 1200 | 1950 | 2.0 | 4.1 | 6.7 | 80 | 2.75 | 9 | 190 | 0.120 |
| 10 | 220 | 1200 | 2200 | 2.3 | 4.8 | 8.7 | 80 | 2.75 | 9 | 160 | 0.124 |
| 11 | 220 | 1200 | 2200 | 2.3 | 4.3 | 8.7 | 80 | 2.75 | 9 | 185 | 0.115 |
| 12 | 220 | 1200 | 1840 | 2.3 | 4.8 | 7.3 | 80 | 2.75 | 9 | 195 | 0.112 |
| 13 | 220 | 1200 | 1500 | 2.3 | 4.8 | 6.0 | 80 | 2.75 | 9 | 205 | 0.108 |
| 14 | 220 | 900 | 1950 | 2.1 | 3.3 | 7.1 | 80 | 2.75 | 6 | 160 | 0.096 |
| 15 | 220 | 900 | 1950 | 2.2 | 3.4 | 7.4 | 80 | 2.75 | 7 | 160 | 0.107 |
| 16 | 220 | 900 | 1950 | 2.3 | 3.6 | 7.7 | 80 | 2.75 | 7 | 160 | 0.102 |
| 17 | 220 | 900 | 2200 | 2.5 | 3.9 | 9.5 | 80 | 2.75 | 6 | 160 | 0.071 |
| 18 | 220 | 900 | 2200 | 2.7 | 4.2 | 10.3 | 80 | 2.75 | 8 | 160 | 0.100 |
| 19 | 220 | 900 | 2000 | 3.0 | 4.7 | 10.4 | 80 | 2.75 | 9 | 160 | 0.101 |
| 20 | 220 | 900 | 1950 | 3.5 | 5.4 | 11.8 | 80 | 2.75 | 9 | 180 | 0.086 |
| 21 | 110 | 400 | 400 | 2.5 | 0.9 | 0.9 | 30 | 3.67 | 6 | 160 | 0.071 |
| 22 | 200 | 900 | 1950 | 2.5 | 3.5 | 7.7 | 70 | 2.86 | 6 | 160 | 0.071 |
| 23 | 215 | 900 | 1950 | 2.5 | 3.8 | 8.2 | 88 | 2.44 | 6 | 160 | 0.071 |
| 24 | 235 | 900 | 1950 | 2.5 | 4.2 | 9.0 | 88 | 2.67 | 6 | 160 | 0.071 |
| 25 | 250 | 900 | 1950 | 2.5 | 4.4 | 9.6 | 88 | 2.84 | 6 | 160 | 0.071 |
| 26 | 260 | 900 | 1950 | 2.5 | 4.6 | 9.9 | 88 | 2.95 | 6 | 160 | 0.071 |
| 27 | 220 | 1200 | 1950 | 2.5 | 5.2 | 8.4 | 80 | 2.75 | 6 | 160 | 0.071 |
| 28 | 235 | 1200 | 1950 | 2.5 | 5.5 | 9.0 | 88 | 2.67 | 7 | 160 | 0.093 |
| 29 | 235 | 1200 | 1950 | 1.5 | 3.3 | 5.4 | 88 | 2.67 | 7 | 185 | 0.123 |
| 30 | 235 | 1200 | 1950 | 2.1 | 4.6 | 7.6 | 88 | 2.67 | 6 | 180 | 0.096 |
| 31 | 235 | 1200 | 2200 | 2.5 | 5.5 | 10.1 | 130 | 1.81 | 6 | 185 | 0.080 |
| 32 | 220 | 900 | 2200 | 2.5 | 3.9 | 9.5 | 80 | 2.75 | 6 | 185 | 0.080 |
| 33 | 220 | 900 | 2200 | 2.5 | 3.9 | 9.5 | 80 | 2.75 | 6 | 185 | 0.080 |
| 34 | 220 | 900 | 2200 | 2.5 | 3.9 | 9.5 | 80 | 2.75 | 6 | 185 | 0.080 |
| 35 | 220 | 900 | 2200 | 2.5 | 3.9 | 9.5 | 80 | 2.75 | 6 | 185 | 0.080 |
| 36 | 220 | 900 | 1950 | 2.1 | 3.3 | 7.1 | 80 | 2.75 | 6 | 160 | 0.096 |
| 37 | 220 | 900 | 2000 | 3.0 | 4.7 | 10.4 | 80 | 2.75 | 9 | 160 | 0.101 |

TYPE 1: OSCILLATING MAGNETIC FIELD, TYPE 2: SHIFTING MAGNETIC FIELD

TABLE 2B

| No. | DEPTH OF IMMERSION NOZZLE (mm) | TYPE OF AC MAGNETIC FIELD | UPPER AC MAGNETIC FIELD (Gauss) | UPPER DC MAGNETIC FIELD (Gauss) | LOWER DC MAGNETIC FIELD (Gauss) |
|---|---|---|---|---|---|
| 1 | 280 | NO | 0 | 0 | 0 |
| 2 | 280 | NO | 0 | 0 | 0 |
| 3 | 280 | NO | 0 | 0 | 0 |
| 4 | 280 | NO | 0 | 0 | 0 |
| 5 | 280 | NO | 0 | 0 | 0 |
| 6 | 280 | NO | 0 | 0 | 0 |
| 7 | 280 | TYPE 1 | 1000 | 1000 | 0 |
| 8 | 280 | TYPE 1 | 700 | 1000 | 0 |
| 9 | 280 | TYPE 1 | 500 | 1000 | 0 |
| 10 | 280 | TYPE 1 | 300 | 1000 | 0 |
| 11 | 280 | TYPE 1 | 300 | 1000 | 0 |
| 12 | 280 | TYPE 1 | 300 | 1000 | 0 |
| 13 | 280 | TYPE 1 | 300 | 1000 | 0 |
| 14 | 280 | TYPE 1 | 300 | 1000 | 0 |
| 15 | 280 | TYPE 1 | 300 | 1000 | 0 |
| 16 | 280 | TYPE 1 | 300 | 1000 | 0 |
| 17 | 280 | TYPE 1 | 0 | 1000 | 1500 |
| 18 | 280 | TYPE 1 | 0 | 1500 | 2000 |
| 19 | 280 | TYPE 1 | 0 | 2000 | 2500 |
| 20 | 280 | TYPE 1 | 0 | 2500 | 3000 |
| 21 | 280 | TYPE 1 | 0 | 0 | 0 |
| 22 | 280 | TYPE 1 | 200 | 1000 | 0 |
| 23 | 280 | TYPE 1 | 200 | 1000 | 0 |
| 24 | 280 | TYPE 1 | 200 | 1000 | 0 |
| 25 | 280 | TYPE 1 | 200 | 1000 | 0 |
| 26 | 280 | TYPE 1 | 200 | 1000 | 0 |
| 27 | 280 | NO | 0 | 0 | 0 |
| 28 | 280 | NO | 0 | 0 | 0 |
| 29 | 280 | TYPE 2 | 600 | 0 | 0 |
| 30 | 280 | TYPE 2 | 600 | 1000 | 0 |
| 31 | 280 | TYPE 2 | 600 | 1000 | 0 |
| 32 | 180 | TYPE 1 | 200 | 1000 | 0 |
| 33 | 200 | TYPE 1 | 200 | 1000 | 0 |
| 34 | 350 | TYPE 1 | 200 | 1000 | 0 |
| 35 | 370 | TYPE 1 | 200 | 1000 | 0 |
| 36 | 280 | TYPE 1 | 300 | 1000 | 1500 |
| 37 | 280 | TYPE 1 | 300 | 1000 | 1500 |

TABLE 3

| No | MAXIMUM SHORT-SIDE BULGING AMOUNT (mm) | MAXIMUM NAIL DEPTH (mm) | MAXIMUM NUMBER OF SLAB SURFACE DEFECTS ($/m^2$) | RATE OF SURFACE DEFECTS (%) | GENERA-TION OF BREAKOUT | RATIO OF POWDER DEFECTS TO TOTAL DEFECTS (%) | REMARKS |
|---|---|---|---|---|---|---|---|
| 1 | 0 | 3.5 | | 3.10 | NO | 49 | COMP. EX. 1 |
| 2 | 1 | 2.7 | 185 | 2.35 | NO | 24 | COMP. EX. 2 |
| 3 | 1 | 2.6 | 120 | 1.23 | NO | 20 | COMP. EX. 3 |
| 4 | 2 | 1.5 | 90 | 0.30 | NO | 36 | COMP. EX. 4 |
| 5 | 2 | 1.1 | 55 | 0.15 | NO | 0 | EXAMPLE 1 |
| 6 | 1 | 0.7 | 45 | 0.05 | NO | 3 | EXAMPLE 2 |
| 7 | 1 | 3.0 | | 3.10 | NO | 33 | COMP. EX. 5 |
| 8 | 1 | 2.9 | | 1.54 | NO | 20 | COMP. EX. 6 |
| 9 | 2 | 2.2 | | 0.50 | NO | 16 | COMP. EX. 7 |
| 10 | 4 | 0.8 | | 0 | NO | 0 | EXAMPLE 3 |
| 11 | 4 | 0.9 | | 0.11 | NO | 5 | EXAMPLE 4 |
| 12 | 3 | 1.3 | | 2.6 | NO | 74 | COMP. EX. 8 |
| 13 | 3 | 1.3 | | 4.1 | NO | 85 | COMP. EX. 9 |
| 14 | 2 | 1.0 | 50 | 0 | NO | 0 | EXAMPLE 5 |
| 15 | 3 | 0.6 | 30 | 0 | NO | 0 | EXAMPLE 6 |
| 16 | 3 | 0.5 | 20 | 0 | NO | 0 | EXAMPLE 7 |
| 17 | 3 | 0.2 | 10 | 0 | NO | 0 | EXAMPLE 8 |
| 18 | 5 | 0.2 | 3 | 0 | NO | 0 | EXAMPLE 9 |
| 19 | 5 | 0.1 | 3 | 0 | NO | 0 | EXAMPLE 10 |
| 20 | 6 | 0.2 | 5 | 0 | NO | 0 | EXAMPLE 11 |
| 21 | 1 | 1.4 | 70 | | NO | | COMP. EX. 10 |
| 22 | 1 | 0.1 | 15 | 0.02 | NO | 0 | EXAMPLE 12 |
| 23 | 2 | 0.2 | 11 | 0 | NO | 0 | EXAMPLE 13 |
| 24 | 5 | 0.3 | 13 | 0 | NO | 0 | EXAMPLE 14 |
| 25 | 10 | 0.8 | 25 | 0.3 | NO | 4 | COMP. EX. 11 |
| 26 | 15 | 1.1 | 60 | 0.4 | NO | 60 | COMP. EX. 12 |
| 27 | 9 | 0.7 | | 0.03 | YES | 15 | EXAMPLE 15 |
| 28 | 9 | 0.6 | | 0.05 | NO | 21 | EXAMPLE 16 |
| 29 | 0 | 2.5 | | 5.90 | NO | 37 | COMP. EX. 13 |
| 30 | 1 | 0.8 | | 0 | NO | 0 | EXAMPLE 17 |
| 31 | 2 | 0.4 | | 0 | NO | 0 | EXAMPLE 18 |
| 32 | 2 | 0.4 | | 0.05 | NO | 33 | EXAMPLE 19 |
| 33 | 2 | 0.4 | | 0 | NO | 0 | EXAMPLE 20 |
| 34 | 2 | 0.4 | | 0 | NO | 0 | EXAMPLE 21 |
| 35 | 2 | 0.6 | | 1.5 | NO | 67 | COMP. EX. 14 |
| 36 | 2 | 1.0 | 20 | 0 | NO | 0 | EXAMPLE 22 |
| 37 | 3 | 0.5 | 12 | 0 | NO | 0 | EXAMPLE 23 |

* BLANK COLUMN: NOT MEASURED COMP. EX.: COMPARATIVE EXAMPLE

## Claims

1. A method for producing an ultra-low carbon steel slab comprising:

providing a continuous casting apparatus comprising a mold having a casting space with a short side length

D of about 150 to about 240 mm and an immersion nozzle having at least one discharge spout with a lateral width d, in which a ratio D/d is in the range of from about 1.5 to about 3.0;
introducing molten steel into the mold through the immersion nozzle; and
casting the molten steel at a casting speed of more than about 2.0 mm/min with the continuous casting apparatus to produce a ultra-low carbon steel slab having a carbon content of about 0.01 mass percent or less.

**2.** The method according to claim 1, further comprising oscillating the mold at a frequency of about 185 cycles/min or less.

**3.** The method according to claim 1, wherein the casting speed is about 2.4 m/min or more.

**4.** The method according to claim 1, wherein the immersion nozzle is a two-spout nozzle.

**5.** The method according to claim 1, wherein the ratio D/d is about 2.1 to about 2.9.

**6.** The method according to claim 1, wherein the ultra-low carbon steel slab is a starting material for a cold-rolled steel sheet for forming outer plates of automobiles.

**7.** The method according to Claim 1, further comprising applying a brake using an electromagnetic force to the flow of molten steel in the casting space of the mold.

**8.** The method according to claim 7, wherein applying a brake using an electromagnetic force to the flow of molten steel is performed by applying static magnetic fields to the mold in a direction intersecting the mold thickness with an upper magnetic field application device and a lower magnetic field application device,
wherein the upper magnetic field application device is provided at an upper portion of the mold including a surface level of the molten steel in the mold and the lower magnetic field application device is provided at a lower side of the upper magnetic field application device, and
the immersion nozzle is disposed between the upper magnetic field application device and the lower magnetic application devices and has an immersion depth of about 200 to about 350 mm.

**9.** The method according to claim 7, wherein applying a brake using an electromagnetic force to the flow of molten steel is performed by superimposingly applying a static magnetic field and an AC magnetic field to the mold in a direction intersecting the mold thickness with a magnetic field application device provided at an upper portion of the mold including a surface level of the molten steel in the mold, and
the immersion nozzle is disposed at a lower side of the magnetic field application device and has an immersion depth of about 200 to about 350 mm.

**10.** The method according to claim 7, wherein applying a brake using an electromagnetic force to the flow of molten steel is performed by superimposingly applying a static magnetic field and an AC magnetic field to the entire mold in the direction intersecting the mold thickness using an upper magnetic field application device and by applying a static magnetic field to the mold in a direction intersecting the mold thickness using a lower magnetic field application device,
the upper magnetic field application device is provided at an upper portion of the mold including a surface level of molten steel in the mold, and the lower magnetic field application device is provided at a lower side of the upper magnetic field application device, and
the immersion nozzle is disposed between the upper and the lower magnetic application devices and has an immersion depth of about 200 to about 350 mm.

**11.** The method according to claim 1, wherein the molten steel comprises about 0.01 mass percent or less of C; about 0.01 to about 0.04 mass percent of Si, about 0.08 to about 0.20 mass percent of Mn, about 0.008 to about 0.020 mass percent of P, about 0.003 to about 0.008 mass percent of S, about 0.015 to about 0.060 mass percent of Al, about 0.03 to about 0.080 mass percent of Ti, about 0.002 to about 0.017 mass percent of Nb, and 0 to about 0.0007 mass percent of B; and the balance Fe and inevitable impurities.

**12.** The method according to claim 11, wherein the molten steel comprises 0.0005 to 0.0090 mass percent of C.

**13.** A method of producing an ultra-low carbon steel slab comprising:

introducing molten steel into a mold having a casting space with a short side length D of about 150 to about 240 mm through an immersion nozzle having at least one discharge spout with a lateral width d, in which a ratio D/d is in the range of from about 1.5 to about 3.0; and

casting the molten steel at a casting speed of more than about 2.0 mm/min with the continuous casting apparatus to produce a ultra-low carbon steel slab having a carbon content of about 0.01 mass percent or less.

**14.** The method according to claim 13, further comprising oscillating the mold at a frequency of about 185 cycles/min or less.

**15.** The method according to claim 13, wherein the casting speed is about 2.4 m/min or more.

**16.** The method according to claim 13, wherein the immersion nozzle is a two-spout nozzle.

**17.** The method according to claim 13, wherein the ratio D/d is about 2.1 to about 2.9.

**18.** The method according to claim 13, wherein the ultra-low carbon steel slab is a starting material for a cold-rolled steel sheet for forming outer plates of automobiles.

**19.** The method according to Claim 13, further comprising applying a brake using an electromagnetic force to the flow of molten steel in the casting space of the mold.

**20.** The method according to claim 19, wherein applying a brake using an electromagnetic force to the flow of molten steel is performed by applying static magnetic fields to the mold in a direction intersecting the mold thickness with an upper magnetic field application device and a lower magnetic field application device,

wherein the upper magnetic field application device is provided at an upper portion of the mold including a surface level of the molten steel in the mold and the lower magnetic field application device is provided at a lower side of the upper magnetic field application device, and

the immersion nozzle is disposed between the upper magnetic field application device and the lower magnetic application devices and has an immersion depth of about 200 to about 350 mm.

**21.** The method according to claim 19, wherein applying a brake using an electromagnetic force to the flow of molten steel is performed by superimposingly applying a static magnetic field and an AC magnetic field to the mold in a direction intersecting the mold thickness with a magnetic field application device provided at an upper portion of the mold including a surface level of the molten steel in the mold, and

the immersion nozzle is disposed at a lower side of the magnetic field application device and has an immersion depth of about 200 to about 350 mm.

**22.** The method according to claim 19, wherein applying a brake using an electromagnetic force to the flow of molten steel is performed by superimposingly applying a static magnetic field and an AC magnetic field to the entire mold in the direction intersecting the mold thickness using an upper magnetic field application device and by applying a static magnetic field to the mold in a direction intersecting the mold thickness using a lower magnetic field application device,

the upper magnetic field application device is provided at an upper portion of the mold including a surface level of molten steel in the mold, and the lower magnetic field application device is provided at a lower side of the upper magnetic field application device, and

the immersion nozzle is disposed between the upper and the lower magnetic application devices and has an immersion depth of about 200 to about 350 mm.

**23.** The method according to claim 13, wherein the molten steel comprises about 0.01 mass percent or less of C; about 0.01 to about 0.04 mass percent of Si, about 0.08 to about 0.20 mass percent of Mn, about 0.008 to about 0.020 mass percent of P, about 0.003 to about 0.008 mass percent of S, about 0.015 to about 0.060 mass percent of Al, about 0.03 to about 0.080 mass percent of Ti, about 0.002 to about 0.017 mass percent of Nb, and 0 to about 0.0007 mass percent of B; and the balance Fe and inevitable impurities.

**24.** The method according to claim 23, wherein the molten steel comprises 0.0005 to 0.0090 mass percent of C.

FIG. 1

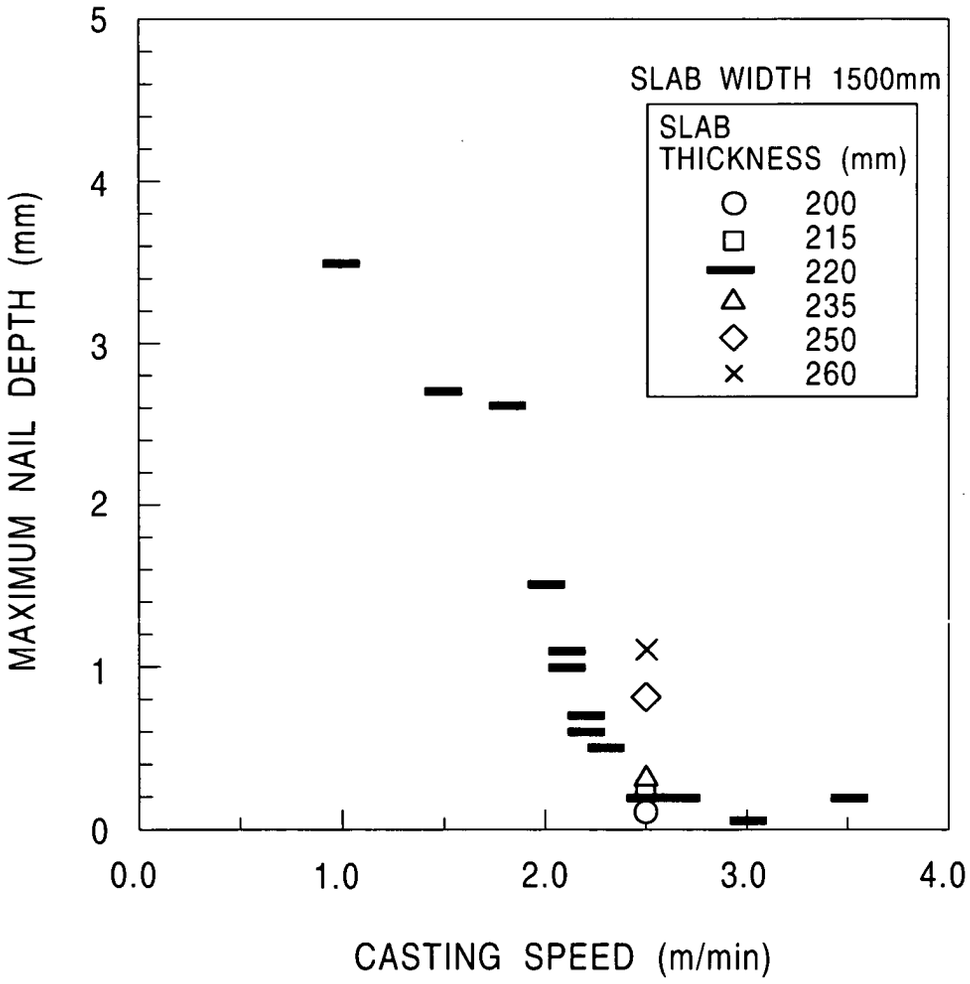
SLAB WIDTH 1500mm
SLAB THICKNESS (mm)
200
215
220
235
250
260
MAXIMUM NAIL DEPTH (mm)
CASTING SPEED (m/min)
0
1
2
3
4
5
0.0
1.0
2.0
3.0
4.0

FIG. 2

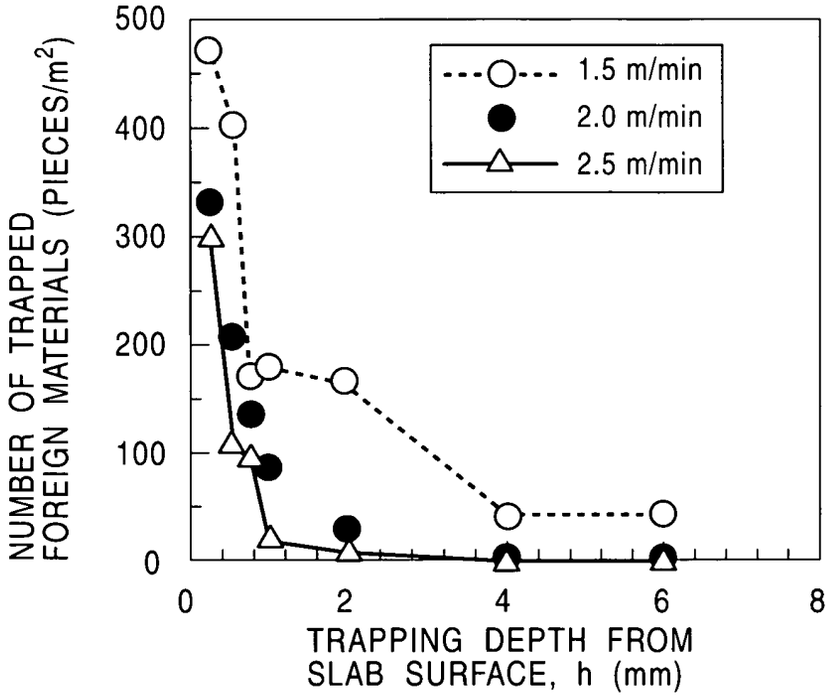
500
400
300
200
100
0
NUMBER OF TRAPPED FOREIGN MATERIALS (PIECES/m2)
1.5 m/min
2.0 m/min
2.5 m/min
0
2
4
6
8
TRAPPING DEPTH FROM SLAB SURFACE, h (mm)

FIG. 3

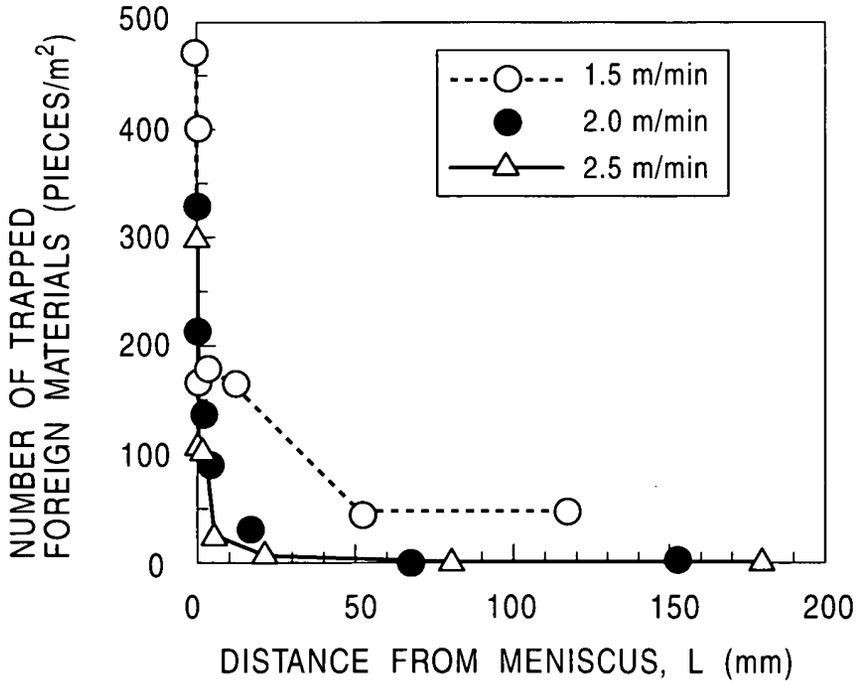
500
400
300
200
100
0
NUMBER OF TRAPPED FOREIGN MATERIALS (PIECES/m2)
1.5 m/min
2.0 m/min
2.5 m/min
0
50
100
150
200
DISTANCE FROM MENISCUS, L (mm)

FIG. 4

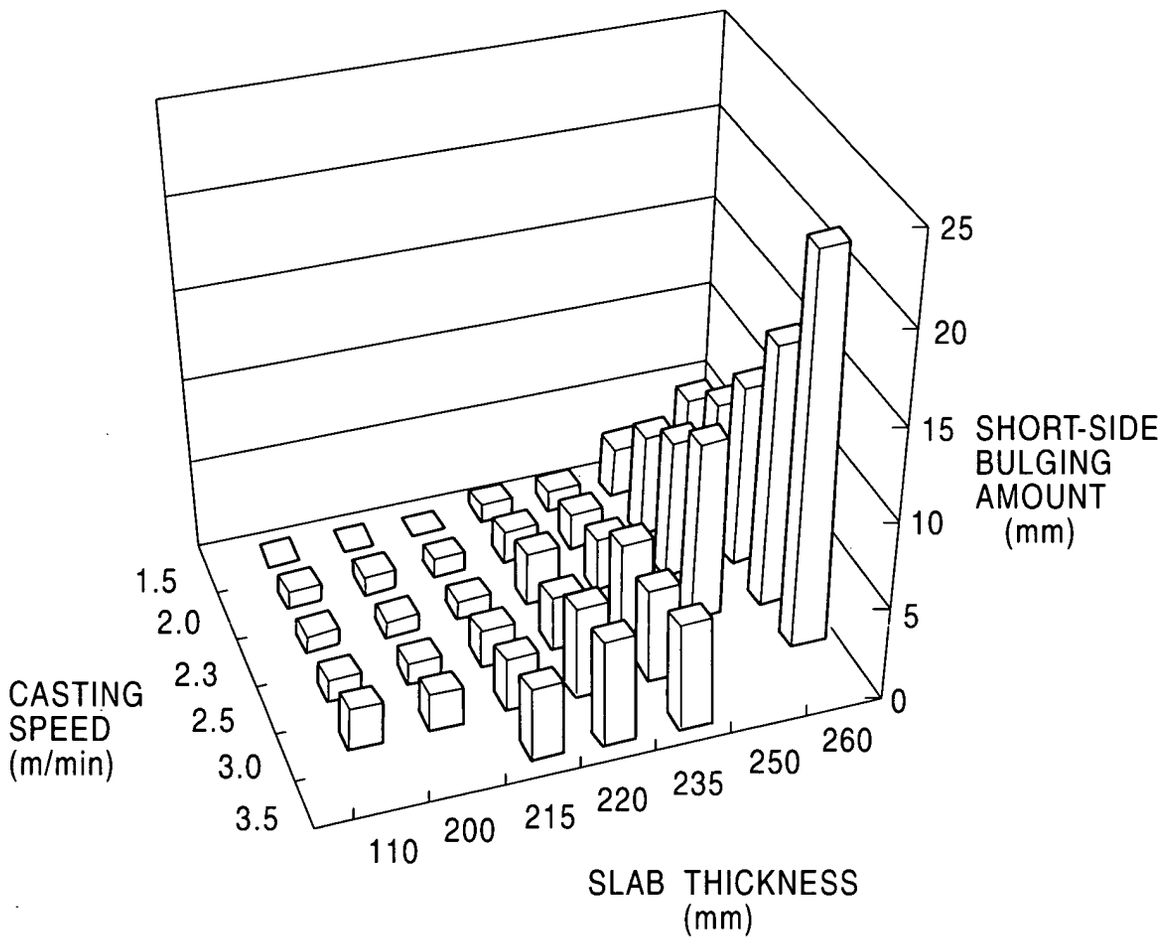
25
20
15
10
5
0
SHORT-SIDE BULGING AMOUNT (mm)
1.5
2.0
2.3
2.5
3.0
3.5
CASTING SPEED (m/min)
110
200
215
220
235
250
260
SLAB THICKNESS (mm)

FIG. 5

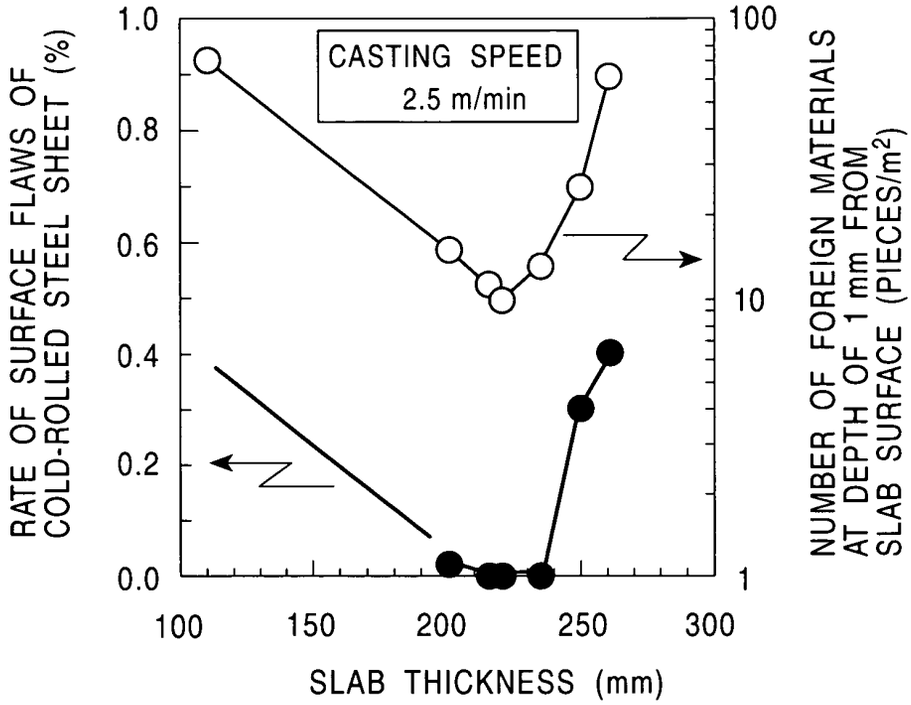
CASTING SPEED
2.5 m/min
RATE OF SURFACE FLAWS OF COLD-ROLLED STEEL SHEET (%)
NUMBER OF FOREIGN MATERIALS AT DEPTH OF 1 mm FROM SLAB SURFACE (PIECES/m²)
SLAB THICKNESS (mm)
1.0
0.8
0.6
0.4
0.2
0.0
100
10
1
100
150
200
250
300

FIG. 6

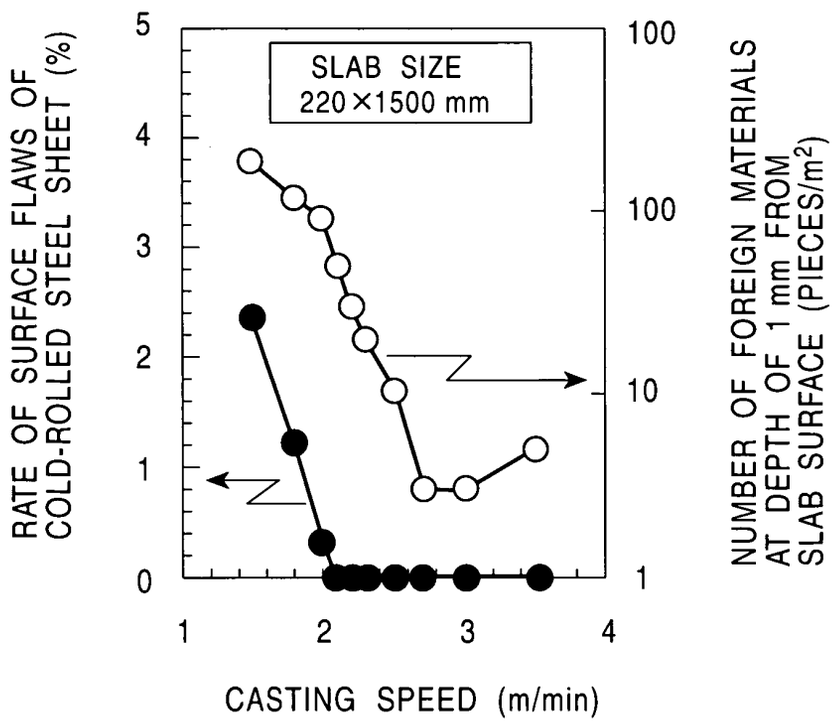
SLAB SIZE
220×1500 mm
RATE OF SURFACE FLAWS OF COLD-ROLLED STEEL SHEET (%)
NUMBER OF FOREIGN MATERIALS AT DEPTH OF 1 mm FROM SLAB SURFACE (PIECES/m²)
CASTING SPEED (m/min)
5
4
3
2
1
0
100
100
10
1
1
2
3
4

FIG. 7A

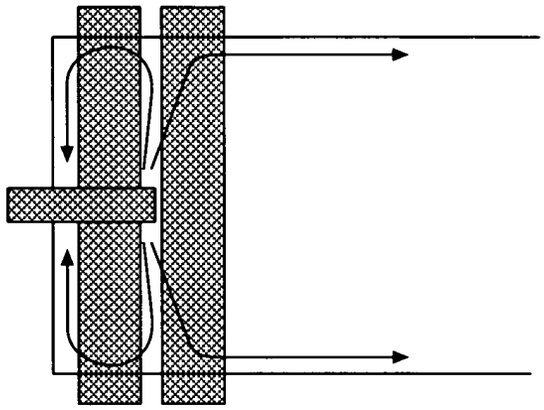


FIG. 7B

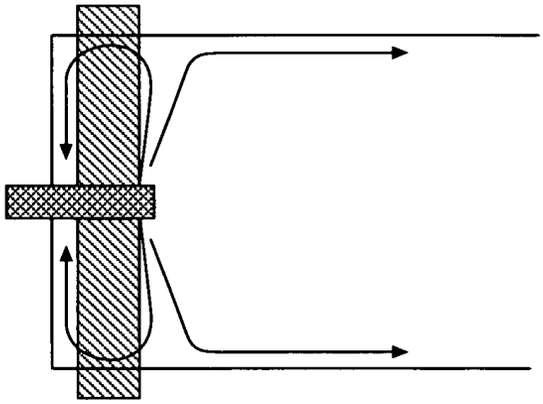


FIG. 7C

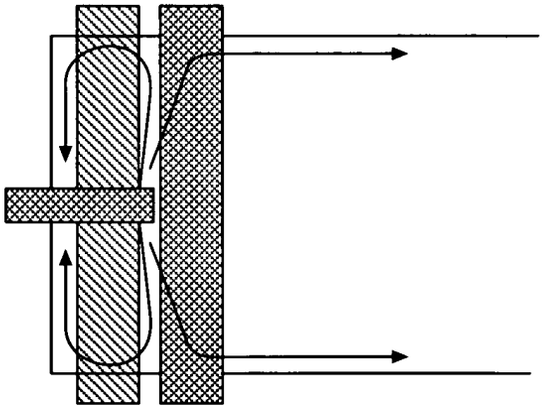

FIG. 8

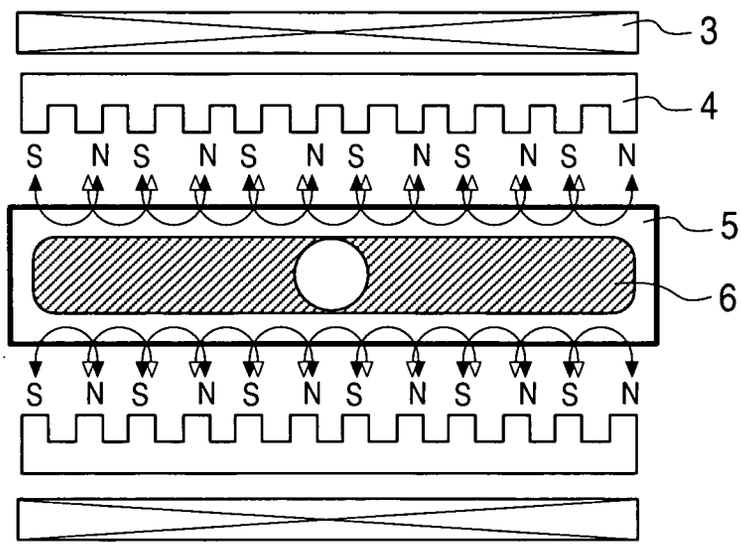

FIG. 9

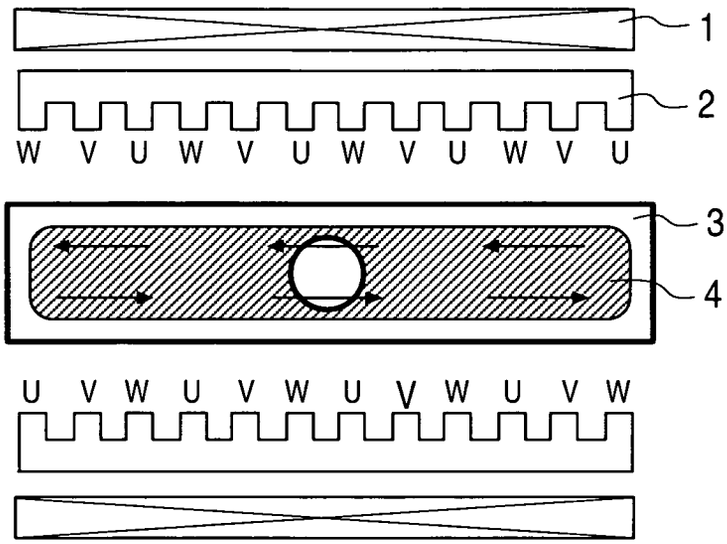

European Patent Office

# EUROPEAN SEARCH REPORT

Application Number
EP 04 02 0281

## DOCUMENTS CONSIDERED TO BE RELEVANT

| Category | Citation of document with indication, where appropriate, of relevant passages | Relevant to claim | CLASSIFICATION OF THE APPLICATION (Int.Cl.7) |
|---|---|---|---|
| A | US 6 253 832 B1 (HALLEFAELT MAGNUS) 3 July 2001 (2001-07-03) * column 8, line 50 - column 9, line 19; figures 2,3 * | 7-10, 19-22 | B22D11/00 B22D11/115 B22D11/14 |
| A | EP 0 820 824 A (SCHLOEMANN SIEMAG AG) 28 January 1998 (1998-01-28) * claims 1-6 * | 7-10, 19-22 | |
| A | PATENT ABSTRACTS OF JAPAN vol. 2003, no. 10, 8 October 2003 (2003-10-08) & JP 2003 170252 A (KAWASAKI STEEL CORP), 17 June 2003 (2003-06-17) * abstract * | 1,3,13, 15 | |
| A | PATENT ABSTRACTS OF JAPAN vol. 1999, no. 01, 29 January 1999 (1999-01-29) & JP 10 263767 A (KAWASAKI STEEL CORP; SAKAI KAGAKU KOGYO KK), 6 October 1998 (1998-10-06) * abstract * | 1,3,6, 13,15,18 | TECHNICAL FIELDS SEARCHED (Int.Cl.7) B22D |
| A | PATENT ABSTRACTS OF JAPAN vol. 2000, no. 23, 10 February 2001 (2001-02-10) & JP 2001 152286 A (NKK CORP), 5 June 2001 (2001-06-05) * abstract * | 11,23 | |
| A | PATENT ABSTRACTS OF JAPAN vol. 2000, no. 23, 10 February 2001 (2001-02-10) & JP 2001 172743 A (NKK CORP), 26 June 2001 (2001-06-26) * abstract * | 11,23 | |

The present search report has been drawn up for all claims

1

| Place of search | Date of completion of the search | Examiner |
|---|---|---|
| The Hague | 8 December 2004 | Mailliard, A |

CATEGORY OF CITED DOCUMENTS

X : particularly relevant if taken alone
Y : particularly relevant if combined with another document of the same category
A : technological background
O : non-written disclosure
P : intermediate document

T : theory or principle underlying the invention
E : earlier patent document, but published on, or after the filing date
D : document cited in the application
L : document cited for other reasons
.....
& : member of the same patent family, corresponding document

EPO FORM 1503 03.82 (P04C01)

## ANNEX TO THE EUROPEAN SEARCH REPORT ON EUROPEAN PATENT APPLICATION NO. EP 04 02 0281

This annex lists the patent family members relating to the patent documents cited in the above-mentioned European search report.
The members are as contained in the European Patent Office EDP file on
The European Patent Office is in no way liable for these particulars which are merely given for the purpose of information.

08-12-2004

| Patent document cited in search report | Publication date | Patent family member(s) | Publication date |
|---|---|---|---|
| US 6253832 B1 | 03-07-2001 | SE 516802 C2 | 05-03-2002 |
| | | AT 192368 T | 15-05-2000 |
| | | CN 1211204 A ,B | 17-03-1999 |
| | | DE 69701857 D1 | 08-06-2000 |
| | | DE 69701857 T2 | 07-12-2000 |
| | | EP 0880417 A1 | 02-12-1998 |
| | | JP 2000504630 T | 18-04-2000 |
| | | SE 9600552 A | 14-08-1997 |
| | | WO 9729874 A1 | 21-08-1997 |
| EP 0820824 A | 28-01-1998 | DE 19625932 A1 | 08-01-1998 |
| | | AT 203696 T | 15-08-2001 |
| | | CN 1173407 A ,B | 18-02-1998 |
| | | DE 59704173 D1 | 06-09-2001 |
| | | EP 0820824 A1 | 28-01-1998 |
| | | ES 2162159 T3 | 16-12-2001 |
| JP 2003170252 A | 17-06-2003 | NONE | |
| JP 10263767 A | 06-10-1998 | NONE | |
| JP 2001152286 A | 05-06-2001 | NONE | |
| JP 2001172743 A | 26-06-2001 | NONE | |

EPO FORM P0459

For more details about this annex : see Official Journal of the European Patent Office, No. 12/82