US00D923324S

(12) United States Design Patent

Miyake et al.

(10) Patent No.: US D923,324 S
(45) Date of Patent: ** Jun. 29, 2021

(54) **PEN CASE**

(71) Applicant: **KING JIM CO., LTD.**, Tokyo (JP)

(72) Inventors: **Kazushige Miyake**, Kawasaki (JP); **Kota Kato**, Kawasaki (JP); **Maiko Hara**, Tokyo (JP); **Nayumi Yamada**, Tokyo (JP); **Natsuki Goto**, Tokyo (JP); **Kaori Jinbo**, Tokyo (JP)

(73) Assignee: **KING JIM CO., LTD.**, Tokyo (JP)

(**) Term: **15 Years**

(21) Appl. No.: **29/715,908**

(22) Filed: **Dec. 5, 2019**

(30) **Foreign Application Priority Data**

Jun. 28, 2019 (JP) 2019-014582

(51) **LOC (13) Cl.** **03-01**

(52) **U.S. Cl.**
USPC **D3/206**; D19/106

(58) **Field of Classification Search**
USPC ... D3/203.1–203.8, 205–206, 215, 219, 226, D3/247, 250–252, 263–266, 273, D3/293–294, 298–299, 301, 303, 315, D3/901; D6/515, 517, 534, 536; D7/600.1, 600.4, 637; D9/734, 759–760, D9/414, 420, 422, 432; D19/101–103, D19/106, 194–195; D27/172, 180, 183, D27/186, 189–191; D28/73, 76, 85–86, D28/91
CPC .. A24F 9/16; A24F 13/14; A24F 15/00; A24F 15/12; A24F 15/14; A24F 15/18; A24F 15/20; A24F 23/00; A24F 23/04; A24F 47/002; A24F 47/008; A45C 3/00; A45C 5/00; A45C 5/005; A45C 5/04; A45C 7/00; A45C 9/00; A45C 11/00; A45C 11/008; A45C 11/04; A45C 11/16; A45C
(Continued)

(56) **References Cited**

U.S. PATENT DOCUMENTS

1,705,829 A * 3/1929 Stanley A24F 15/12 206/739
D285,615 S * 9/1986 Burger A24F 15/12 D27/189

(Continued)

OTHER PUBLICATIONS

King Jim Pencase "PACALI" horizontal type, unknown first available date, kingjim.co.jp [online], [site visited Apr. 21, 2021], Available at internet URL: https://www.kingjim.co.jp/sp/english/pacali/ (Year: 2021).*

(Continued)

Primary Examiner — Jeffrey D Asch
Assistant Examiner — Caitlin Ann Laverty
(74) *Attorney, Agent, or Firm* — Manabu Kanesaka

(57) **CLAIM**

The ornamental design for a pen case, as shown and described.

DESCRIPTION

FIG. **1** is a perspective view of a pen case showing our new design;
FIG. **2** is a front view thereof;
FIG. **3** is a rear view thereof;
FIG. **4** is a plan view thereof;
FIG. **5** is a bottom view thereof;
FIG. **6** is a right side view thereof;
FIG. **7** is a left side view thereof;
FIG. **8** is a front view thereof in an opened state;
FIG. **9** is a plan view thereof in the opened state;
FIG. **10** is a bottom view thereof in the opened state;
FIG. **11** is a right side view thereof in the opened state; and,
FIG. **12** is a perspective view thereof in the opened state.

1 Claim, 7 Drawing Sheets

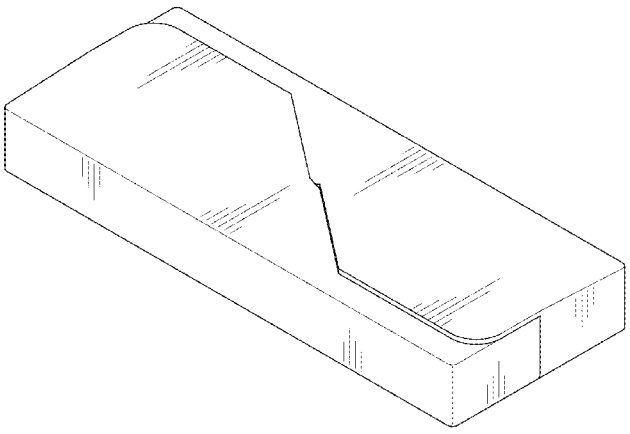

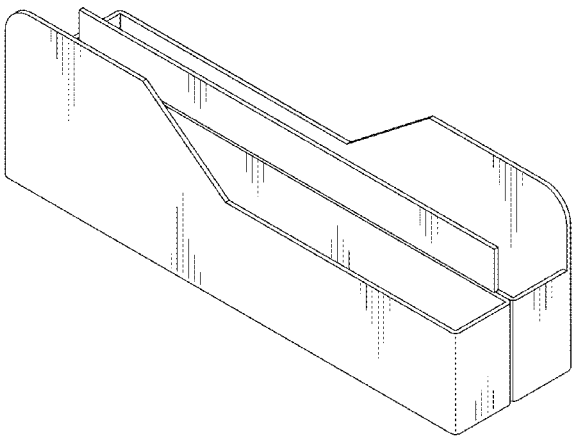

(58) **Field of Classification Search**

CPC 11/24; A45C 11/26; A45C 11/34; A45C 11/36; A45C 13/002; A45C 2011/007; A45D 33/12; A45D 33/14; A45D 33/22; A45D 33/24; A45D 33/26; A45D 33/28; A45D 34/00; A45D 34/04; A45D 34/041; A45D 34/06; A45D 40/00; A45D 40/18; A45D 40/26; A45D 40/261; A45D 40/262; A45D 44/11; A45D 44/18; A47F 7/02; A47F 7/021; A61J 1/00; A61J 1/03; A61J 7/04; A61J 7/0084; B65D 1/36; B65D 43/16; B65D 50/04; B65D 83/04; B65D 83/0445; B65D 83/0481; B65D 85/00; B65D 85/02; B65D 85/10

See application file for complete search history.

(56) **References Cited**

U.S. PATENT DOCUMENTS

4,613,041	A *	9/1986	Carlton	B65D 85/00 206/373
D575,952	S *	9/2008	Forbes	D3/203.1
D685,261	S *	7/2013	Hunter	D9/420
D733,550	S *	7/2015	Birgers	D9/414
D805,763	S *	12/2017	Zhang	D3/218
10,045,568	B2 *	8/2018	Monsees	H05B 3/44
D842,536	S *	3/2019	Bowen	D27/167
D845,623	S *	4/2019	Sullivan	D3/247
D858,085	S *	9/2019	Hoshikawa	D3/205
2018/0141714	A1 *	5/2018	Kanbar	A45D 33/24

OTHER PUBLICATIONS

"King Jim, pen case "PACALI" that opens and stands on its own with "Pakari"" by Kazuya Sakakibara, article posted Aug. 6, 2019, watch.impress.co.jp [online], [site visited Apr. 21, 2021], Available at internet URL: https://watch.impress.co.jp/docs/news/1200325.html (Year: 2019).*

Akro-Mils 66486CLDBL 12-Gallon Plastic Storage Keepbox with Attached Lid, first available Aug. 26, 2008, amazon.com [online], [site visited Apr. 21, 2021], Available at internet URL: https://www.amazon.com/Akro-Mils-12-Gallon-Plastic-Storage-Attached/dp/B00006IARN/ref=sr_1_1_sspa?dchild=1&keywords=Storage+Bin+with+Attached+Lid&qid=1619023536&sr=8-1-spons&psc=1&spLa=ZW5jcnlwdGVkUXVhbGlmaWVyPUFRM09JN1VLVkhGMEwmZW5jcnlwdGVkSWQ9QTAzNjk5NTQzNko4TkVWRkJKSEk5JmVuY3J5cHRIZEFkSWQ9QTAxNTA3NTEzVUtVOFpUN0FBMEU5JndpZGdldE5hbWU9c3BfYXRmJmFjdGlvbj1jbGlja1JIZGIyZWN0JmRvTm90TG9nQ2xpY2s9dHJ1ZQ== (Year: 2008).*

* cited by examiner

Fig. 1

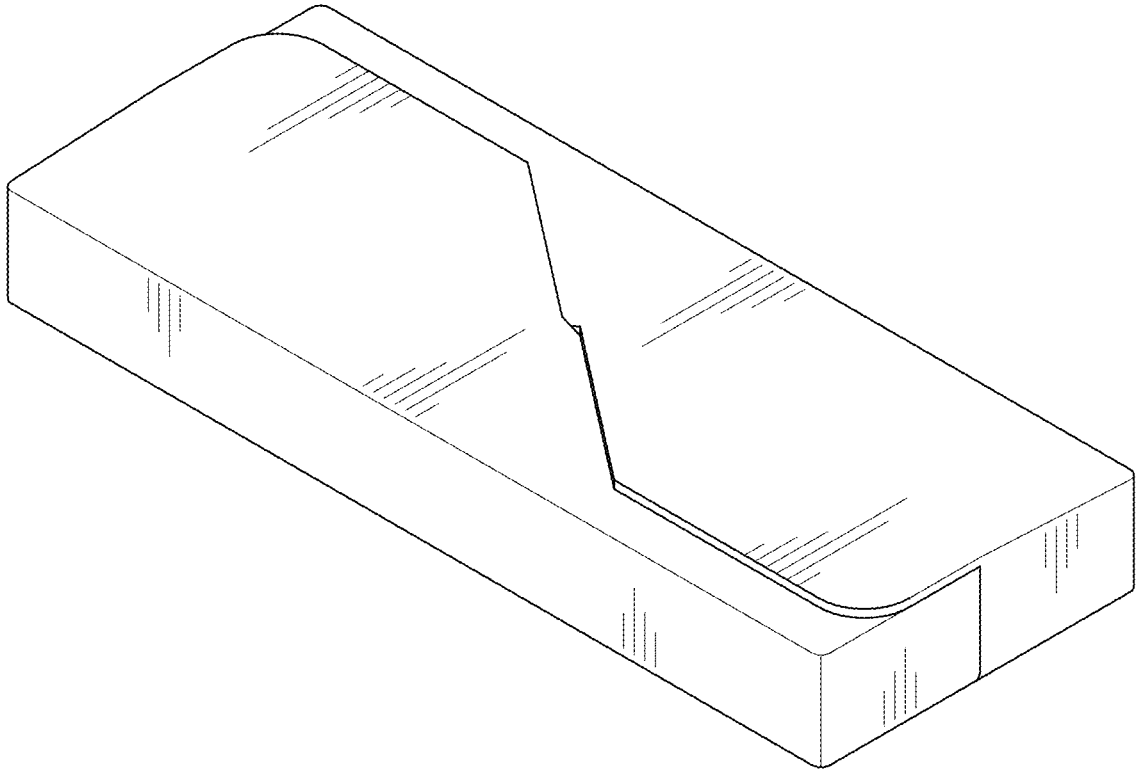

Fig. 2

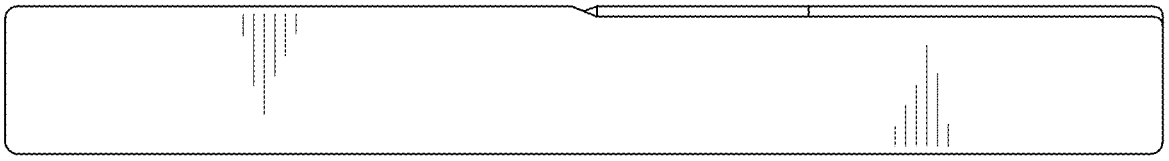

Fig. 3

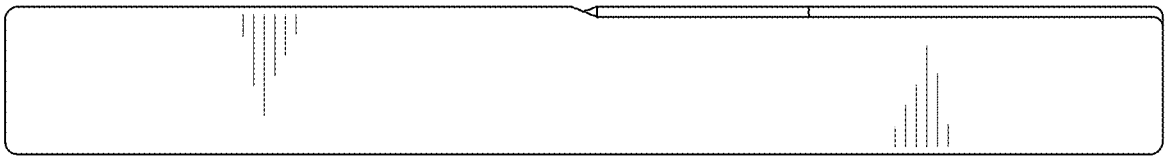

Fig. 4

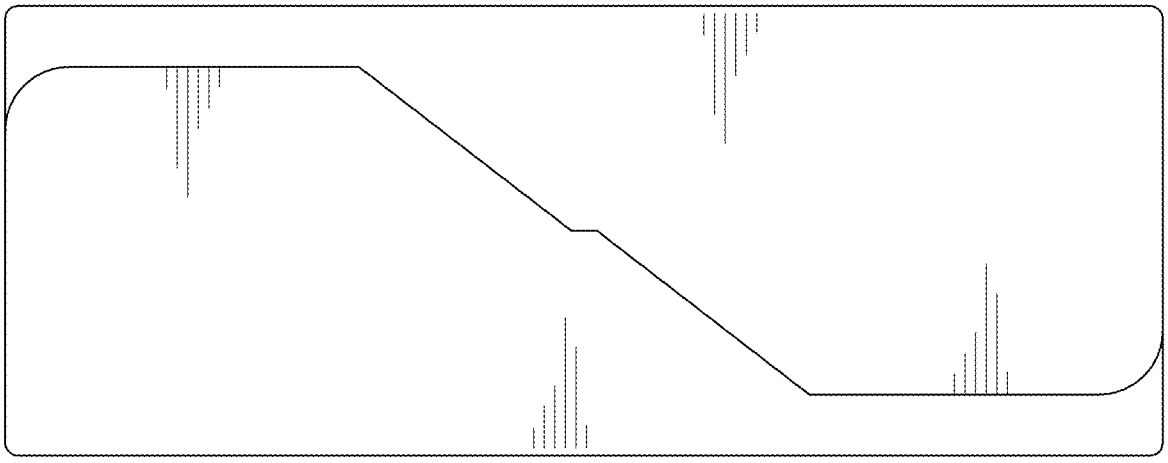

Fig. 5

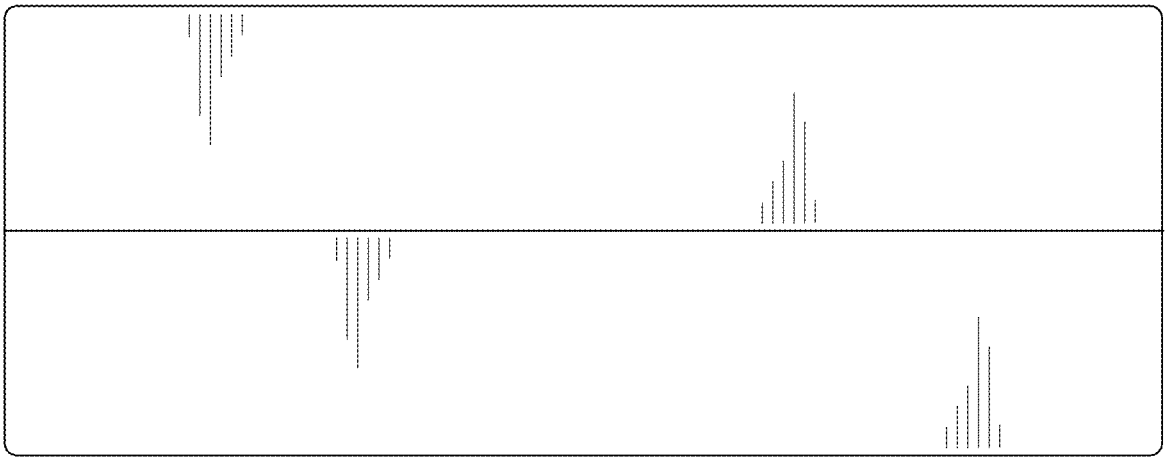

Fig. 6

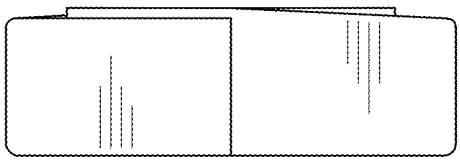

Fig. 7

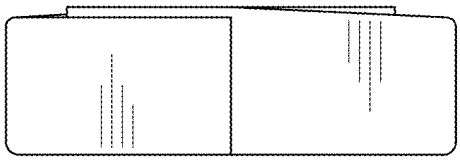

Fig. 8

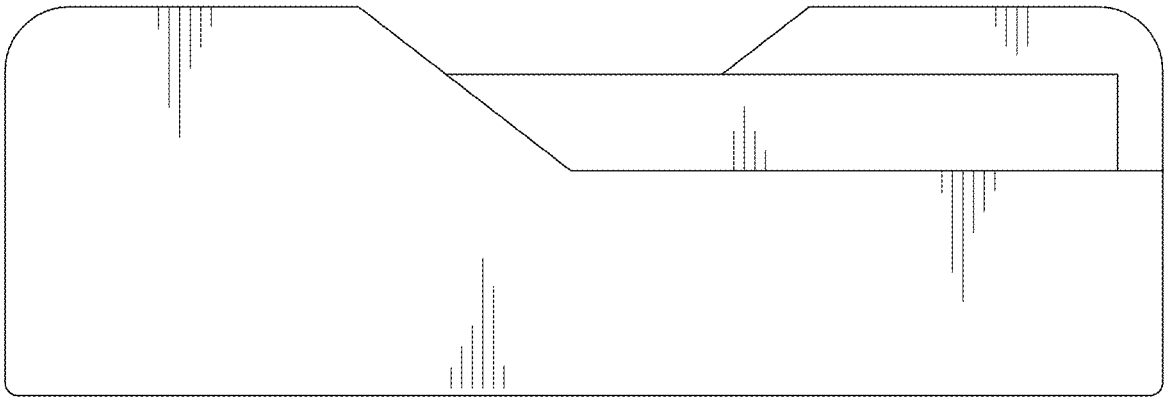

Fig. 9

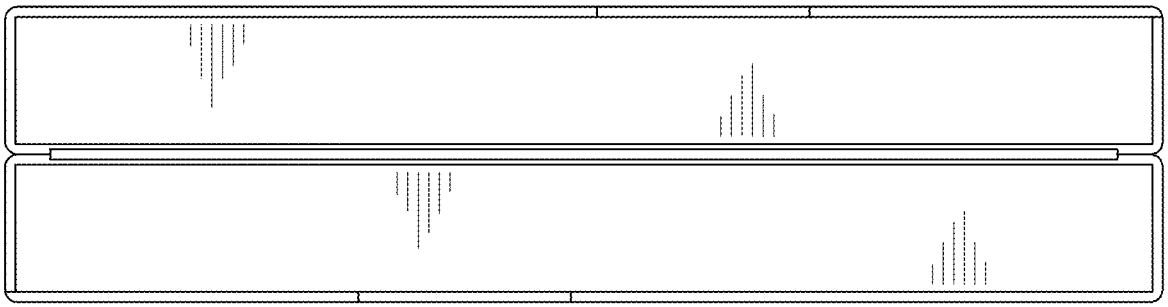

Fig. 10

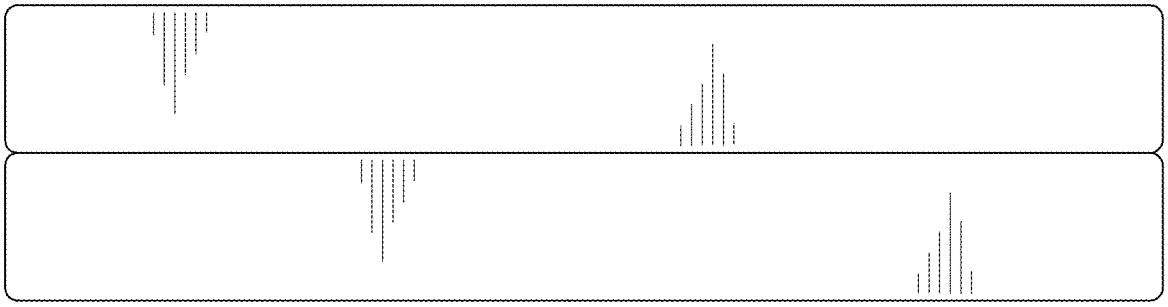

Fig. 11

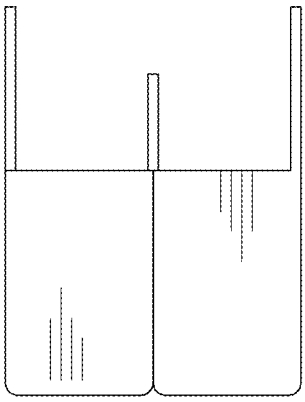

Fig. 12

