Oct. 24, 1961 P. KOLLSMAN 3,005,763

METHOD OF AND APPARATUS FOR SEPARATING CONSTITUENTS OF A LIQUID

Filed Sept. 26, 1958 4 Sheets-Sheet 1

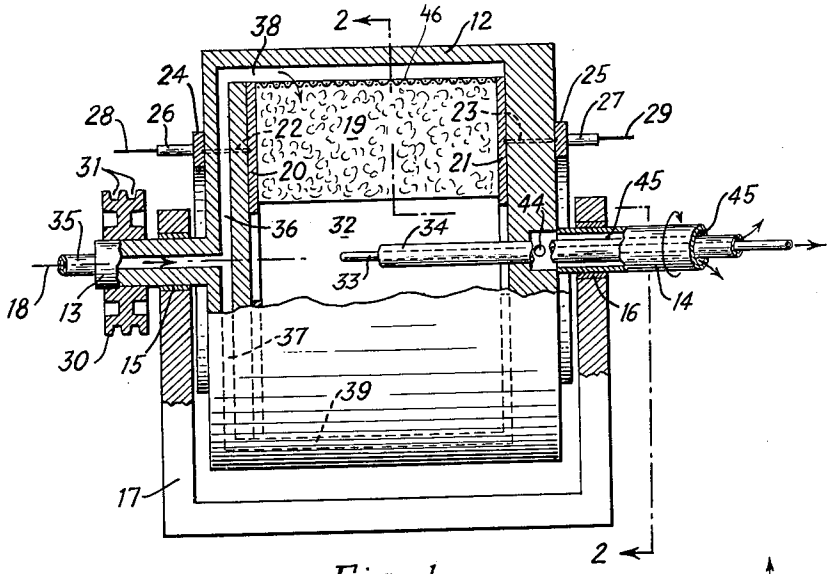

Fig. 1

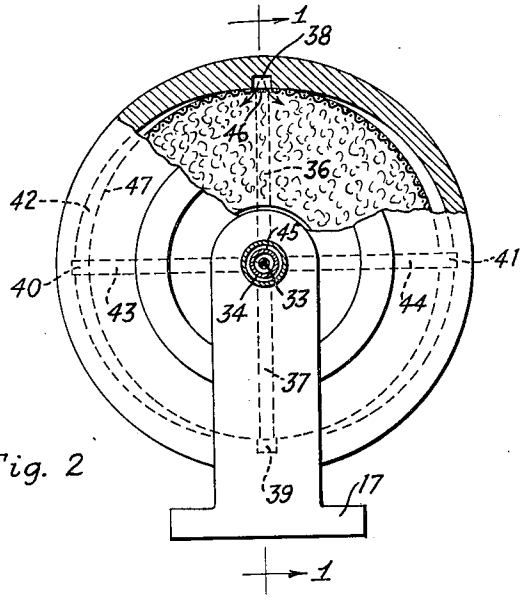

Fig. 2

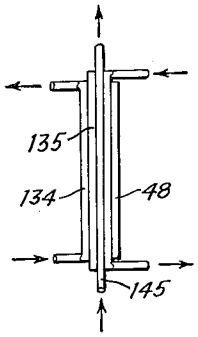

Fig. 3

INVENTOR.
Paul Kollsman
BY Howard B. Russell
his ATTORNEY

Oct. 24, 1961 P. KOLLSMAN 3,005,763

METHOD OF AND APPARATUS FOR SEPARATING CONSTITUENTS OF A LIQUID

Filed Sept. 26, 1958 4 Sheets-Sheet 2

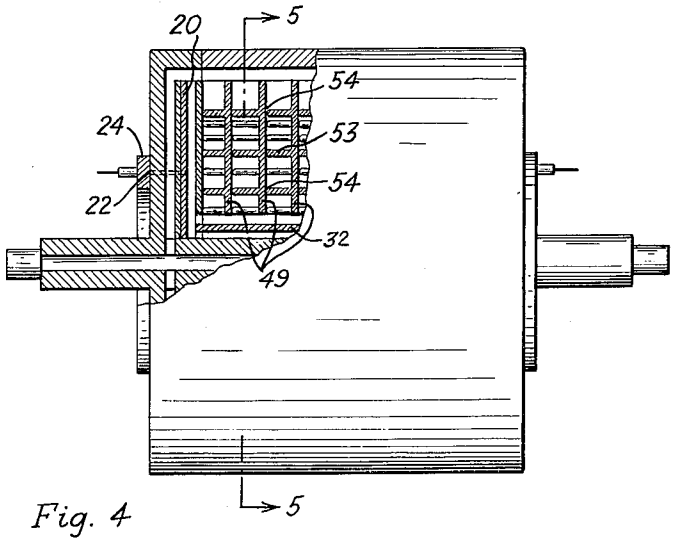

Fig. 4

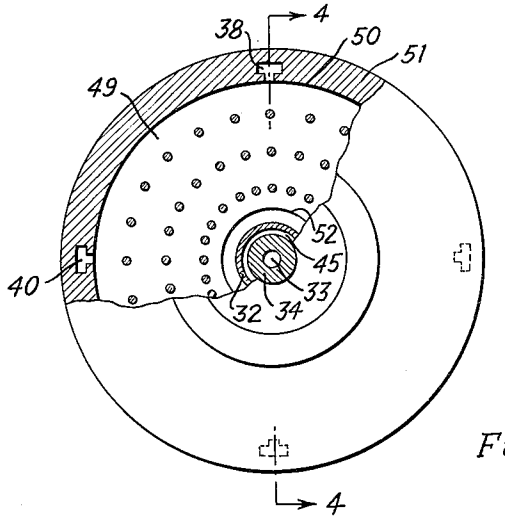

Fig. 5

INVENTOR.
Paul Kollsman
BY Howard G. Russell
his ATTORNEY

Oct. 24, 1961 P. KOLLSMAN 3,005,763

METHOD OF AND APPARATUS FOR SEPARATING CONSTITUENTS OF A LIQUID

Filed Sept. 26, 1958 4 Sheets-Sheet 3

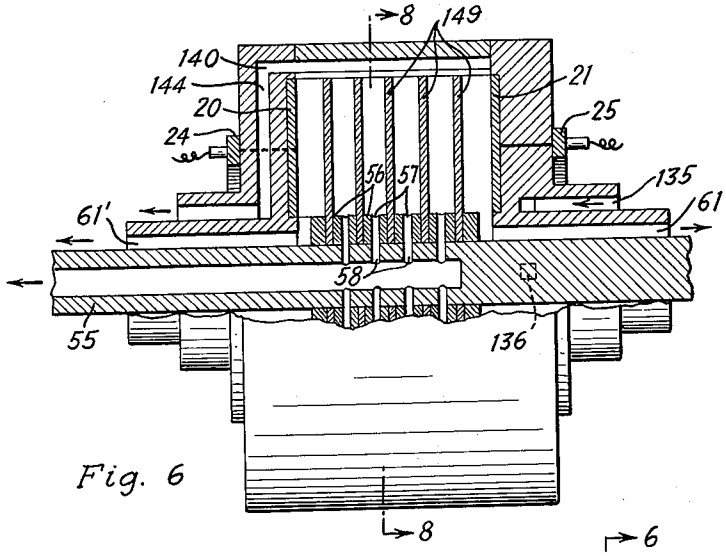

Fig. 6

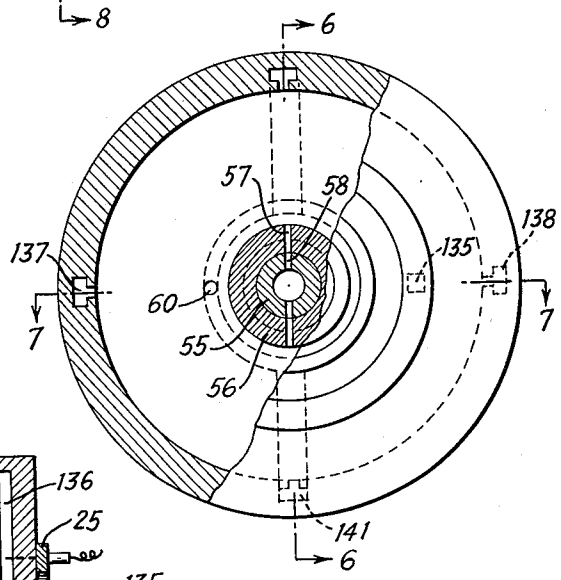

Fig. 8

Fig. 7

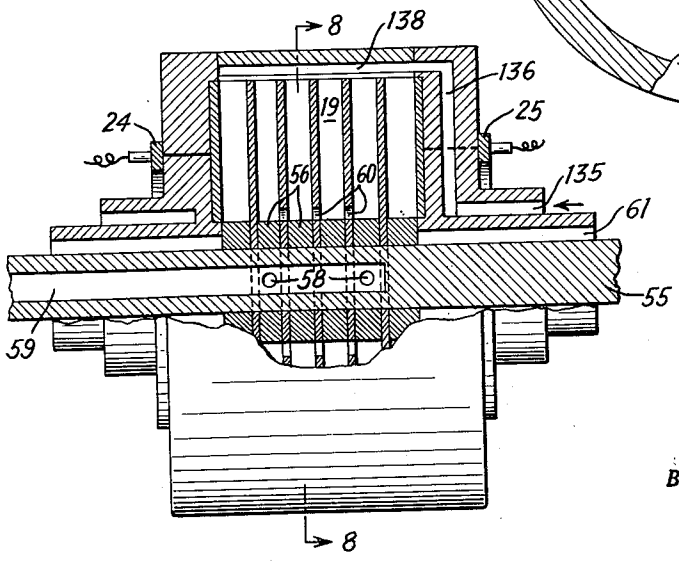

INVENTOR.
Paul Kollsman
BY Howard G. Russell
his ATTORNEY

Oct. 24, 1961 P. KOLLSMAN 3,005,763

METHOD OF AND APPARATUS FOR SEPARATING CONSTITUENTS OF A LIQUID

Filed Sept. 26, 1958 4 Sheets-Sheet 4

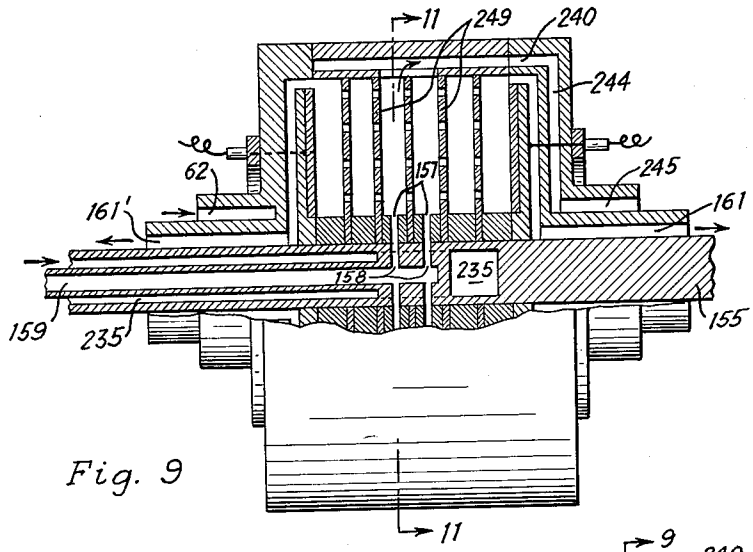

Fig. 9

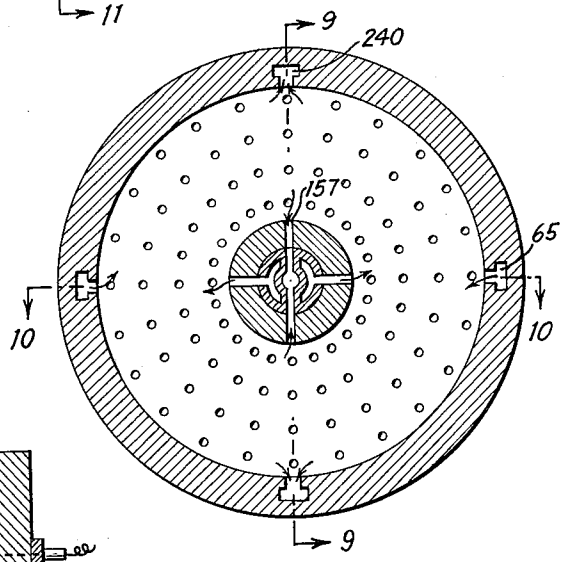

Fig. 10

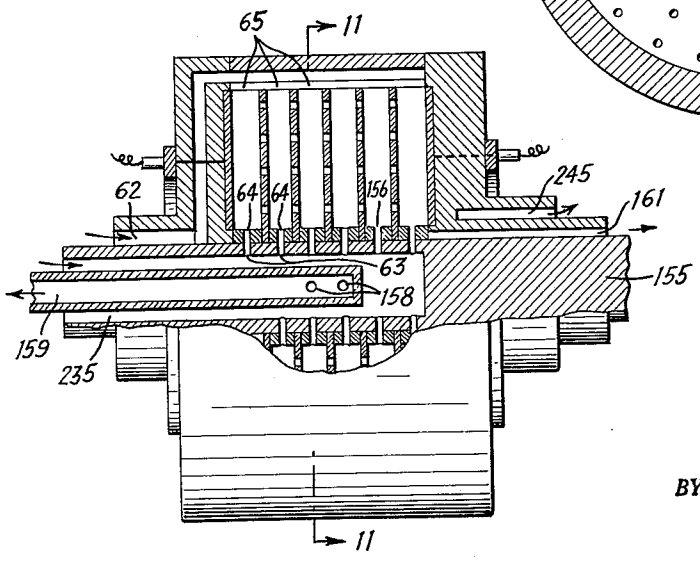

Fig. 11

INVENTOR.
Paul Kollsman
BY Howard E. Russell
his ATTORNEY

United States Patent Office 3,005,763 Patented Oct. 24, 1961

3,005,763

METHOD OF AND APPARATUS FOR SEPARATING CONSTITUENTS OF A LIQUID

Paul Kollsman, 100 E. 50th St., New York, N.Y.

Filed Sept. 26, 1958, Ser. No. 763,506
20 Claims. (Cl. 204—180)

This invention relates to the art of treating a volume of fluid under the influence of an electrical potential for the purpose of producing a first volume of heavier fluid and a second volume of a lighter fluid containing certain constituents of the fluid in different proportions or concentrations.

The treatment may be carried out for the purpose of separating certain constituents of the same polarity or of opposite polarity or for the purpose of producing a volume of a concentrate and a volume of a dilute.

My co-pending applications Serial No. 445,309 and Serial No. 465,793, now Patents No. 2,854,393 and No. 2,854,394, dated September 30, 1958, disclose methods and forms of apparatus for treating liquids as well as gas and vapor mixtures, both of electrically conductive, poorly conductive, or non-conductive character. The disclosed method is based on the phenomenon that under the application of a mechanical accelerating force, such as gravity or centrifugal force, the heavier constituents, or volume of fluid, are displaced in one direction while the lighter constituents, or volume of fluid, are displaced in the opposite direction.

The present invention is specifically directed to the utilization of centrifugal force.

It is recognized that separators operating on the centrifugal force principle are well known. It is further recognized that electrodialytical separators including concentrating and diluting apparatus operating on the membrane principle are known. The performance of the latter form of apparatus depends not only on the permselectivity of the membranes, but also on their mechanical tightness, since hydraulic flow through imperfections in the membranes results in passage of dilute product into concentrate product and vice versa.

In the present invention, which also contemplates the use of membranes in certain of its embodiments, the mechanical perfection of the membranes is of little importance and the invention may be practiced with hydraulically imperfect membranes, even particles of ion exchange material, each particle acting like miniature membrane.

In the practice of the invention the application of the electrical potential and the application of centrifugal force combine in such a way that the invention cannot be carried out, not even in a degree, if one, or the other is not present. More particularly, no separation takes place if in the centrifugal separator the flow of electric current is interrupted due to removal of the electrical potential, even though the spinning of the apparatus rotor continues, and, similarly, no separation takes place if the spinning is discontinued, even though an electrical current is maintained.

The various aims, objects and advantages of this invention will appear more fully from the detailed description which follows accompanied by drawings showing, for the purpose of illustration, preferred embodiments of the invention. The invention also resides in certain new and original features of construction and combination of elements as well as in certain steps and sequences of steps as hereinafter set forth and claimed.

Although the characteristic features of the invention which are believed to be novel will be particularly pointed out in the claims appended hereto, the invention itself, its objects and advantages and the manner in which it

may be carried out may be better understood by referring to the following description taken in connection with the accompanying drawings forming a part of it in which:

FIG. 1 is an elevational view, partly in section, of a centrifugal device embodying the invention, the section being taken on line 1—1 of FIG. 2;

FIG. 2 is an elevational view, partially in section, of the apparatus of FIG. 1, the section being taken on line 2—2 of FIG. 1;

FIG. 3 is a partially diagrammatic illustration of a heat exchanger for use in connection with the apparatus of FIG. 1;

FIG. 4 is an elevational view, partly in section, of a modified form of rotor employing membranes, the section being taken on line 4—4 of FIG. 5;

FIG. 5 is a sectional view of the rotor of FIG. 4, the section being taken on line 5—5 of FIG. 4;

FIG. 6 is a sectional view of a modified rotor employing centrally mounted membranes, the section being taken on line 6—6 of FIG. 8;

FIG. 7 is a sectional view of the rotor taken at right angles, on line 7—7 of FIG. 8;

FIG. 8 is a sectional view of the rotor of FIG. 6, the section being taken on line 8—8 of FIGS. 6 and 7;

FIG. 9 is a modified form of rotor including provision for the inflow of a donee solution;

FIG. 10 is a sectional view of the rotor of FIG. 9, the section being taken on line 10—10 of FIG. 9; and

FIG. 11 is a sectional view of the rotor of FIG. 9, the section being taken on line 11—11 of FIG. 9.

In the following description and in the claims various details will be identified by specific names for convenience. The names, however, are intended to be generic in their application. Corresponding reference characters refer to corresponding parts of the several figures of the drawings.

The drawings accompanying, and forming part of, this specification disclose certain specific details of the invention for the purpose of explanation of its broader aspects, but it is understood that the details may be modified in various respects without departure from the principles of the invention and that the invention may be incorporated in other structures than those shown.

In accordance with the invention the liquid to be treated is introduced into spaces between bodies of ion exchange material contained in a rotor. The bodies may be in the form of membranes or in the form of particles, such as granules or beads, of ion exchange material, or a mixture of ion exchange particles and inert particles. Each body or particle of ion exchange material may be considered a miniature membrane along one side of which a layer of concentrate collects and along the other side of which a layer of dilute is formed when an electric current passes through the ion exchange material. The minute volume of concentrate is generally heavier than the minute volume of dilute and is displaced under the action of centrifugal force so as to move from one particle to the next, with the result that the heavier volume eventually accumulates at the periphery whereas the lighter volume accumulates at the center. Separate radially spaced ducts permit withdrawal of the resulting lighter and heavier fluid volumes from the rotor.

The application of centrifugal force to an apparatus employing ion exchange materials for the separation of fluid constituents or for the formation of ionically concentrated or ionically diluted products offers numerous advantages.

Relatively large volumes of fluid may be handled due to the great increase in the force tending to separate concentrated liquid particles from dilute liquid particles.

While the tendency of dilute to mix with the concen-

trate is present (as it is in any membrane type concentrating and diluting apparatus, where the mechanical hydraulic tightness of the membranes opposes such mixing), the force which separates the concentrate from the dilute is increased greatly, so much so that the hydraulic tightness of the membranes is of only secondary importance.

While failure of a single membrane in a conventional membrane type dialysis apparatus leads to failure of the entire apparatus, a similar failure of a membrane in an apparatus embodying the present invention is not serious, since the great separating effect of the centrifugal force greatly predominates over the tendency of dilute to mix with the concentrate at the defective membrane.

In an apparatus employing granular or bead type bodies of ion exchange material along opposite sides of which small volumes of dilute and concentrate form there is a distinct tendency of the dilute and the concentrate to mix at both ends of the bodies. However, the separating action of the centrifugal force which moves the concentrate radially outward greatly predominates, making the apparatus, which in the absence of centrifugal force would be a very poor separator, a very effective separating device.

The centrifugal force produces relatively high flow velocities which, in turn, lead to reduced polarization.

The use of bodies of ion exchange material in the form of beads offers particular advantages where the operation is carried out at elevated temperatures. Whereas membranes normally consist of ion exchange material and a thermoplastic binder, which becomes weaker with an increase in temperature, beads of ion exchange material do not normally weaken at higher temperatures and are substantially infusible. The beads do not soften at higher temperatures and lend themselves admirably to use in the present invention.

The charge of beads may consist entirely of ion exchange beads or of a mixture of ion exchange beads with neutral beads, such as non-sulfonated polystyrene, Teflon, or regenerated cellulose. The admixture of neutral beads interrupts the ion path from electrode to electrode through the beads by interposition of non-conductive beads between ion conductive ones.

As disclosed in my prior Patent No. 2,815,320 it is often desirable to provide an ion conductive filler in an electrodialysis apparatus for the purpose of reducing the electrical resistance between spaced membranes or spaced electrodes. As disclosed, the ion exchange filler functions as an ion conductor and the membranes function as separating ion passage discriminating elements.

The present arrangement is not analogous in that the beads perform the function of membranes, and it is desirable to maintain the conductive path from electrode to electrode small. For this reason beads of least compressibility are preferred, whereas in the aforesaid prior filler arrangement large contact areas between the beads are desired. These are produced, for example, by compressing the filler beads to some extent.

The apparatus shown in FIG. 1 comprises a rotor **12** having two trunnions **13** and **14** mounted in bearings **15** and **16** of the support **17** for spinning about a spin axis **18**. The rotor **12** is hollow and provides a rotor chamber **19** on opposite walls of which electrodes **20** and **21** are mounted connected by leads **22** and **23** to slip rings **24**, **25** on which brushes **26** and **27** run. Leads **28** and **29** extend from the brushes to a suitable source of direct electrical potential (not shown).

A pulley **30** is mounted on the trunnion **13** having V belt grooves **31** for connection to a suitable motor. The rotor chamber **19** contains bodies of ion exchange material. In the illustrated embodiment these bodies have the form of beads. The beads may be of one polarity, for example Amberlite IR–120 or Amberlite IRA–400. They may also be a mixture of cation beads and anion beads in equal proportions, for example 50%, by weight, of IR–120 and 50% of IRA–400. Inert or ion permeable beads of non-permselective character, such as regenerated cellulose beads may be admixed and may comprise up to one-half of the total volume. The charge of beads arranges itself symmetrically when the rotor is spun leaving a central space **32** from which two ducts **33** and **34** extend to the outside through the trunnion **14**. The duct **34** is a dilute product removal duct and the duct **33** serves to carry gas out of the apparatus. It is understood that appropriate stuffing boxes are installed (not shown) to connect the rotating portions of the ducts with stationary portions.

Liquid to be treated enters through a supply duct **35** in the trunnion **13** and flows through branch passages **36** and **37** to peripheral supply ports **38** and **39**.

Collecting ports **40** and **41** for the collection of concentrate dilute are disposed at right angles with respect to the supply ports **38** and **39**. Collecting grooves **42** may be machined in the periphery of the cylindrical portion of the rotor permitting the heavier volume to flow, under the action of centrifugal force to the point radially farthest remote from the spin axis **18**, the point being the collection ports **40** and **41**. Branch passages **43** and **44** extend to an outer trunnion duct **45** of annular cross section through which the heavier product may be removed.

Screening **46** may be provided to keep beads out of the supply port and screening **47** may be provided for the same purpose at the collecting grooves **42** and the collecting ports **40** and **41**.

Referring, next, to FIG. 3, a heat exchanger **48** may be provided for raising the temperature of the raw fluid to a predetermined elevated temperature. The heavier fraction passes through a central passage **145**, the lighter fraction passes through an outer space **134** and the raw fluid passes through an annular chamber **135** receiving heat from both the central duct **145** and the outer duct **134**.

FIGS. 4 and 5 illustrate a rotor whose bodies of ion exchange material have the form of membranes **49**. The membranes may all be of one polarity or they may be of two different polarities arranged in alternating or irregular sequence, the sequence being of little importance. The membranes are of annular shape and rest with their peripheries **50** against the cylindrical portion **51** of the rotor. Centrally the membranes are cut out at **52** to provide the central space **32**. The membranes are spaced from one another by integral spacers **53** which may be provided with insulating tip portions **54** for the purpose of reducing the passage of current through the spacers from membrane to membrane in preference of passage of the current through the liquid.

The membranes need not be hydraulically tight or perfect in distinction from conventional electrodialysis apparatus whose performance depends on the ability of the membranes to separate the liquid on one side of the membrane from the liquid on the other side of the membrane, one generally being an ionic concentrate and the other being an ionic dilute.

FIGS. 6, 7 and 8 illustrate a construction in which the membranes **149** are centrally mounted on the shaft **55** by clamp rings **56** acting as spacers between the membranes and having passages **57** therethrough in line with corresponding passages **58** in the rotor shaft **55** permitting dilute product to pass through the central duct **59** of the rotor shaft.

The membranes must be of a higher specific gravity than the liquid so that they will not float or buckle in the liquid but remain stretched out under the action of the centrifugal force. The membranes have perforations **60** adjacent the clamp rings **56** to permit the dilute to distribute itself evenly within the center portion of the rotor chamber **19**.

Raw liquid is centrally introduced through the central supply duct **135** and flows through radial branch passages **136** to peripheral supply ports **137** and **138**.

The heavier fraction collects in collecting ports **140**

and 141 and reaches the centrally located removal duct 145 through substantially radial passages 144. Electrode chamber liquid may be withdrawn centrally through ducts 61 and 61'.

FIGS. 9 to 11 illustrate a modification of the apparatus shown in FIGS. 6 to 8. The apparatus provides for the separate recovery of liquid from the electrode chamber through passages 161 and 161'. The lighter fraction is recovered from centrally located spaces between perforated membranes 249 through passages 157 and 158 leading to a central dilute duct 159. The heavier fraction is collected in collecting ports 240 and removed through radial passages 244 and a central annular passage 245.

Liquid to be treated is centrally introduced through a central shaft passage 235 and enters the spaces between the membranes 249 through passages 63, 64 in the shaft 155 and in the clamp rings 156, respectively.

A donee liquid, for example water or some other appropriate solvent, may be continuously introduced under pressure through a supply duct 62. The donee liquid enters the spaces between the membranes peripherally at 65 and tends to wash the concentrate back towards the dilute.

Examples

Example I.—An apparatus was constructed according to FIGS. 1 and 2 having a chamber 19 of an internal diameter of 150 mm. and an internal length of 150 mm. Two platinum electrodes were mounted at the ends. The chamber was filled to three-quarters of its volume by a mixture of beads of Amberlite IR–120 and IRA–400 in equal proportions, the diameter of the beads being 0.7 mm. The outflow was adjusted to equal 1 cc. per second of dilute and 1 cc. per second of the concentrate. The operating potential was 18 v. D.C. Rate of rotation—1200 r.p.m. Liquid to be treated: sea water of 3.5% salt content.

Result: The dilute had a salt content of 0.21% and the outflow temperature of the dilute was 21° C.

Example II.—In this test the apparatus of Example I was used to separate a mixture of one part benzene and one part acetone, by volume. To the mixture 0.1% per weight of KCl was added. Operating potential: 50 volts.

Result: Inner outflow contained 47% benzene and 53% acetone, by volume. The outer outflow contained 53% benzene and 47% acetone, by volume.

Example III.—In this test a heat exchanger was added to the apparatus of Example I. The heat exchanger consisted of three concentrically arranged pieces of stainless steel tubing of 6 feet length and diameters of ⅛ in., 3/16 in. and ¼ in., the outer tube being insulated by rock wool. The sea water was introduced through the intermediate of the three chambers of the heat exchanger as also shown in FIG. 3.

Result: Salt content of the dilute—0.18%. Temperature of the dilute after passage through the heat exchanger—44° C.

Example IVa.—Apparatus and conditions as in Example I with the exception that the rotor was maintained stationary.

Result: Outflow from the dilute passage contained 3.5% salts. No deionization took place.

Example IVb.—Apparatus and conditions as in Example I with the exception that the potential was reduced to zero.

Result: Outflow from the dilute passage contained 3.4% salts. No deionization took place.

Example V.—Apparatus and conditions as in Example I, except that the rate of rotation was reduced to 300 r.p.m.

Result: The dilute outflow contained 0.76% salts.

Example VI.—The apparatus of Example I was modified by substituting a charge of beads of 0.7 mm. diameter consisting of one volume of Amberlite IR–120 beads and two volumes of neutral Teflon beads. The operating conditions were the same as in Example I.

Result. The dilute contained 0.48% salts.

Example VII.—The apparatus of Example VI was modified by substituting beads of regenerated cellulose for the Teflon beads.

Result: The dilute contained 0.41% salts.

Example VIII.—The apparatus of Example I was modified by substituting a stack of 50 equally spaced cation membranes of Amberplex of ½ mm. thickness for the beads, the arrangement being shown in FIGS. 6 to 8.

Result: The dilute contained 0.16% salts.

Example IX.—The apparatus of Example VIII was modified by an arrangement of 25 Amberplex cation membranes and 25 Amberplex anion membranes, arranged in alternating sequence, the membrane adjacent the cathode being a cation membrane.

Result: The dilute contained 0.14% salts.

Example X.—The apparatus of Example IX was modified by perforating the 48 inner membranes by holes of ⅛ inch diameter uniformly distributed over the membrane surface, the perforations equalling 6% of the total membrane area, the arrangement being substantially as shown in FIGS. 9 to 11. Solution inlets were provided for all chambers, and separate outlets were provided for the electrode chambers, as shown in FIGS. 9 to 11. Concentrate outlets and dilute outlets were provided for 41 centrally located chambers only. Water inlets 62 were provided for all chambers except the electrode chambers. The membrane adjacent the cathode was a non-perforated cation membrane.

A solution of 0.2 N KF and 0.2 N LiCl was supplied through the solution inlet 235. Distilled water was supplied through the donee passage 62.

Flow rates: Solution inflow—3 cc. per second, water inflow—6 cc. per second. Electrode chamber outflow: 1 cc. per second for each electrode chamber. Concentrate outflow: 1 cc. per second. Dilute outflow: 6 cc. per second. Potential: 18 v. D.C. Rate of rotation: 1200 r.p.m.

After two hours of operation the ratio, in moles, of cations K to Li was 2.9 in the concentrate and 0.34 in the dilute and the ratio in moles of the anions Cl to F was 2.0 in the concentrate and 0.5 in the dilute. The ions of both polarities were separated in that the mobile ions were found in the concentrate and the less mobile ions in the dilute.

Example XI.—The apparatus of Example IX was modified to contain 12 Amberplex cation membranes and 12 Amberplex anion membranes. All chambers were filled with a mixture of beads of Amberlite IR–120 and IRA–400 in equal proportions to provide a conductive bridge of ion exchange material from electrode to electrode. Liquid treated: a mixture of equal parts of benzene and acetone, by volume, with 0.1% of KCl, by weight of the mixture, added. Operating potential: 25 volts.

Result: Inner outflow contained 41% benzene and 59% acetone. Outer outflow contained 59% benzene and 41% acetone.

The method of Example XI may also be carried out, without admixture of KCl to the non-conductive mixture, in an apparatus having electrode chambers containing an electrolyte. Ions originating in the electrode chambers, external with respect to the treatment space for the non-conductive mixture, pass through the apparatus via the conductive bridge of ion exchange material between the membranes, and bring about the separation of the non-conductive components.

What is claimed is:

1. An apparatus for separating under the influence of an electric current a liquid containing at least two constituents into a heavier component and a lighter component, the apparatus comprising, in combination, a hollow rotor having a spin axis; means for spinning the

rotor about said axis; a plurality of bodies of ion exchange material arranged in the rotor in such a way as to provide passages for liquid in a substantially radial direction; a pair of spaced electrodes mounted in said rotor in such a position that the electric current passing from one electrode to the other passes through said bodies of ion exchange material substantially transverse to the direction of the centrifugal force; means for introducing liquid into the hollow space of said rotor for distribution between said bodies; and a first and a second withdrawal duct extending from radially spaced zones of said rotor for separately removing heavier liquid from a zone of greater radial distance and lighter liquid from a zone of lesser radial distance.

2. An apparatus for separating under the influence of an electric current a liquid containing at least two constituents into a heavier component and a lighter component, the apparatus comprising, in combination, a hollow rotor having a spin axis; means for spinning the rotor about said axis; a bed of particles in said rotor, at least certain of said particles consisting of permselective ion exchange material, the particles being so shaped as to leave interstices between them through which liquid may pass; a pair of spaced electrodes in said rotor mounted in such a position that current from one electrode to the other passes through said bed substantially transverse to the direction of the centrifugal force; means for introducing liquid into the hollow space of said rotor between said interstices; and a first and a second withdrawal duct extending from radially spaced zones of said rotor for separately removing heavier liquid from a zone of greater radial distance and lighter liquid from a zone of lesser radial distance.

3. An apparatus as set forth in claim 2, in which said bed consists of particles of ion exchange material of one polarity.

4. An apparatus as set forth in claim 2, in which said bed consists of a mixture of particles of cation exchange material and particles of anion exchange material.

5. An apparatus as set forth in claim 2, in which said bed consists of a mixture of particles of ion exchange material and particles of an ionically non-conductive material.

6. An apparatus for separating under the influence of an electric current a liquid containing at least two constituents into a heavier component and a lighter component, the apparatus comprising, in combination, a hollow rotor having a spin axis; means for spinning the rotor about said axis; a pair of spaced electrodes in said rotor in a position to establish an electric field substantially transverse to the direction of centrifugal force; a plurality of spaced membranes mounted in said rotor between said electrodes, substantially normal with respect to said spin axis, at least certain of said membranes being permselective; means for introducing liquid into said rotor between said membranes; and a first and a second withdrawal duct extending from radially spaced zones of said rotor for separately removing heavier liquid from a zone of greater radial distance and lighter liquid from a zone of lesser radial distance.

7. An apparatus as set forth in claim 6, in which said first and said second duct extend from the peripheral and the central zone of the rotor, respectively.

8. An apparatus as set forth in claim 6, in which said membranes are of the same polarity.

9. An apparatus as set forth in claim 6, in which said membranes include anion membranes and cation membranes.

10. An apparatus for separating under the influence of an electric current a liquid containing at least two constituents into a heavier component and a lighter component, the apparatus comprising, in combination, a hollow rotor having a spin axis; means for spinning the rotor about said axis; a pair of spaced electrodes in said rotor for establishing an electric field substantially transverse to the direction of the centrifugal force; a plurality of spaced membranes mounted in said rotor between said electrodes substantially normal with respect to said spin axis, at least certain of said membranes being permselective; means for introducing liquid into said rotor between said membranes; a first and a second withdrawal duct extending from radially spaced zones of said rotor for separately removing heavier liquid from a zone of greater radial distance and lighter liquid from a zone of lesser radial distance; and means for introducing a donee liquid into the zone of heavier liquid in a direction to displace at least a portion of the heavier liquid toward the zone of lighter liquid.

11. The method of treating a solution to produce a first volume of concentrate product and a second volume of dilute product, the method comprising, introducing the solution into the spaces between bodies of ion exchange material; passing an electric current through said bodies and the liquid between them substantially transverse to the direction of the centrifugal force, below recited; centrifuging the solution by spinning said bodies and liquid to subject said bodies and the liquid to centrifugal force; and withdrawing concentrate product liquid and dilute product liquid from zones of different radial spacing from the spin axis, concentrate liquid being withdrawn at a greater radial distance than dilute liquid.

12. The method of separating two relatively non-conductive constituents of a liquid, the method comprising, introducing the liquid into the space between bodies of an ion exchange material; passing an electric current through said bodies and the liquid between them, the direction of the electric current being substantially at right angles to the direction of the centrifugal force, below recited; centrifuging the liquid by spinning said bodies and liquid to subject said bodies and the liquid to centrifugal force; and withdrawing a heavier fraction and a lighter fraction liquid from zones of different radial spacing from the spin axis, the heavier fraction liquid being withdrawn at a greater radial distance than the lighter fraction, said fractions containing said constituents in different relative proportions.

13. The method of treating a solution to produce a first volume of cencentrate product and a second volume of dilute product, the method comprising, introducing the solution into the spaces between bodies of ion exchange material; passing an electric current through said bodies and the liquid between them; centrifuging the solution by spinning said bodies and liquid to subject said bodies and the liquid to centrifugal force, the direction of the centrifugal force being substantially transverse to the electric field; withdrawing concentrate product liquid and dilute product liquid from zones of different radial spacing from the spin axis, concentrate liquid being withdrawn at a greater radial distance than dilute liquid; and introducing a further flow of liquid into the concentrate product zone to displace at least a portion of the concentrate toward the dilute zone.

14. The method of treating a solution to produce a first volume of concentrate product and a second volume of dilute product, the method comprising, introducing the solution into the interstices of a bed of particles, at least certain particles of which are of permselective ion exchange material; passing an electric current through the bed in a direction substantially transverse to the direction of the centrifugal force, below recited, to form local zones of ionic concentration and dilution on opposite sides of the particles in which zones individual volumes of ionic concentrate and ionic dilute are formed; centrifuging the liquid by spinning the liquid and the particles to displace the individual liquid volumes of concentrate and dilute in substantially opposite directions through the spaces between the particles, through successive local zones of concentration and dilution of progressively higher concentration and dilution, respectively; and removing concentrate

product liquid and dilute product liquid from radially spaced zones of the bed.

15. The method of treating a solution to produce a first volume of concentrate product and a second volume of dilute product, the method comprising, introducing the solution into the spaces between substantially parallel membranes, at least certain of the membranes being permselective, passing an electric current substantially transversely through said membranes and the liquid therebetween; spinning said membranes and the liquid therebetween about an axis substantially normal to the surface of the membranes; and withdrawing concentrate product liquid and dilute product liquid from zones of different radial spacing from the spin axis, the concentrate product being withdrawn at a greater radial distance than dilute liquid.

16. An electrodialysis apparatus comprising, in combination, a hollow rotor having a spin axis; means for spinning the rotor about said axis; a pair of electrodes spaced in the rotor in the direction of the rotor axis; a plurality of spaced membranes of ion exchange material in said rotor, said membranes dividing the space between the electrodes into chambers; supply duct means including supply ports in the rotor for continuously supplying liquid to said chambers; first withdrawal duct means including first withdrawal ports in the rotor for continuously withdrawing liquid from said chambers; and second withdrawal duct means including second withdrawal ports for continuously withdrawing liquid from said chambers, said first withdrawal ports having a greater radial distance from the rotor axis than said second withdrawal ports.

17. An electrodialysis apparatus comprising, in combination, a hollow rotor having a spin axis; means for spinning the rotor about said axis; a pair of electrodes spaced in the rotor in the direction of the rotor axis; a plurality of spaced membranes of ion exchange material in said rotor, said membranes dividing the space between the electrodes into chambers; supply duct means including supply ports in the rotor for continuously supplying liquid to said chambers; first withdrawal duct means including peripheral withdrawal ports in the rotor for continuously withdrawing a heavier liquid product from said chambers; and second withdrawal duct means including central withdrawal ports for continuously withdrawing a lighter liquid product from said chambers.

18. An electrodialysis apparatus comprising, in combination, a hollow rotor having a spin axis; means for spinning the rotor about said axis; a pair of electrodes spaced in the rotor in the direction of the rotor axis; a plurality of spaced membranes of ion exchange material in said rotor, said membranes dividing the space between the electrodes into chambers; supply duct means including supply ports in the rotor for continuously supplying liquid to be treated into said chambers; first withdrawal duct means including first withdrawal ports in the rotor for continuously withdrawing liquid product from a peripheral zone of the rotor; second withdrawal duct means including second withdrawal ports for continuously withdrawing liquid product from a central zone of the rotor; and further supply duct means including supply ports in the rotor for continuously supplying a donee liquid into the peripheral portion of the rotor.

19. An electrodialysis apparatus comprising, in combination, a hollow rotor having a spin axis; means for spinning the rotor about said axis; a pair of electrodes spaced in the rotor in the direction of the rotor axis; a plurality of spaced membranes of two types alternatingly arranged between the electrodes in the rotor, said membranes dividing the space between the electrodes into chambers, the membranes of one type being permeable to ions of one polarity and passage resistant to ions of the opposite polarity, the membranes of the other type being permeable to ions of the opposite polarity; supply duct means including supply ports in the rotor for continuously supplying liquid to be treated into said chambers; first withdrawal duct means including first withdrawal ports in the rotor for continuously withdrawing a first liquid product from said chambers; and second withdrawal duct means including second withdrawal ports for continuously withdrawing a second liquid product from said chambers, said first withdrawal ports having a greater radial distance from the rotor axis than the second withdrawal ports.

20. An electrodialysis apparatus comprising, in combination, a hollow rotor having a spin axis; means for spinning the rotor about said axis; a pair of electrodes spaced in the rotor in the direction of the rotor axis; a plurality of spaced anion membranes and cation membranes arranged in alternating order between the electrodes and dividing the space of the rotor into chambers; supply duct means including supply ports in the rotor for continuously supplying liquid to be treated into said chambers; first withdrawal duct means including first withdrawal ports in the rotor for continuously withdrawing a first liquid product from a peripheral zone of the rotor; and second withdrawal duct means including second withdrawal ports for continuously withdrawing a second liquid product from a central zone of the rotor.

References Cited in the file of this patent

UNITED STATES PATENTS

2,085,537	Lyons	June 29, 1937
2,741,591	Dewey et al.	Apr. 10, 1956
2,854,393	Kollsman	Sept. 30, 1958
2,854,394	Kollsman	Sept. 30, 1958