Sheet 1 - 2, Sheets.

E. T. Covell.

Seaming Metallic Vessels.

No. 94,947. Patented Sept. 21, 1869.

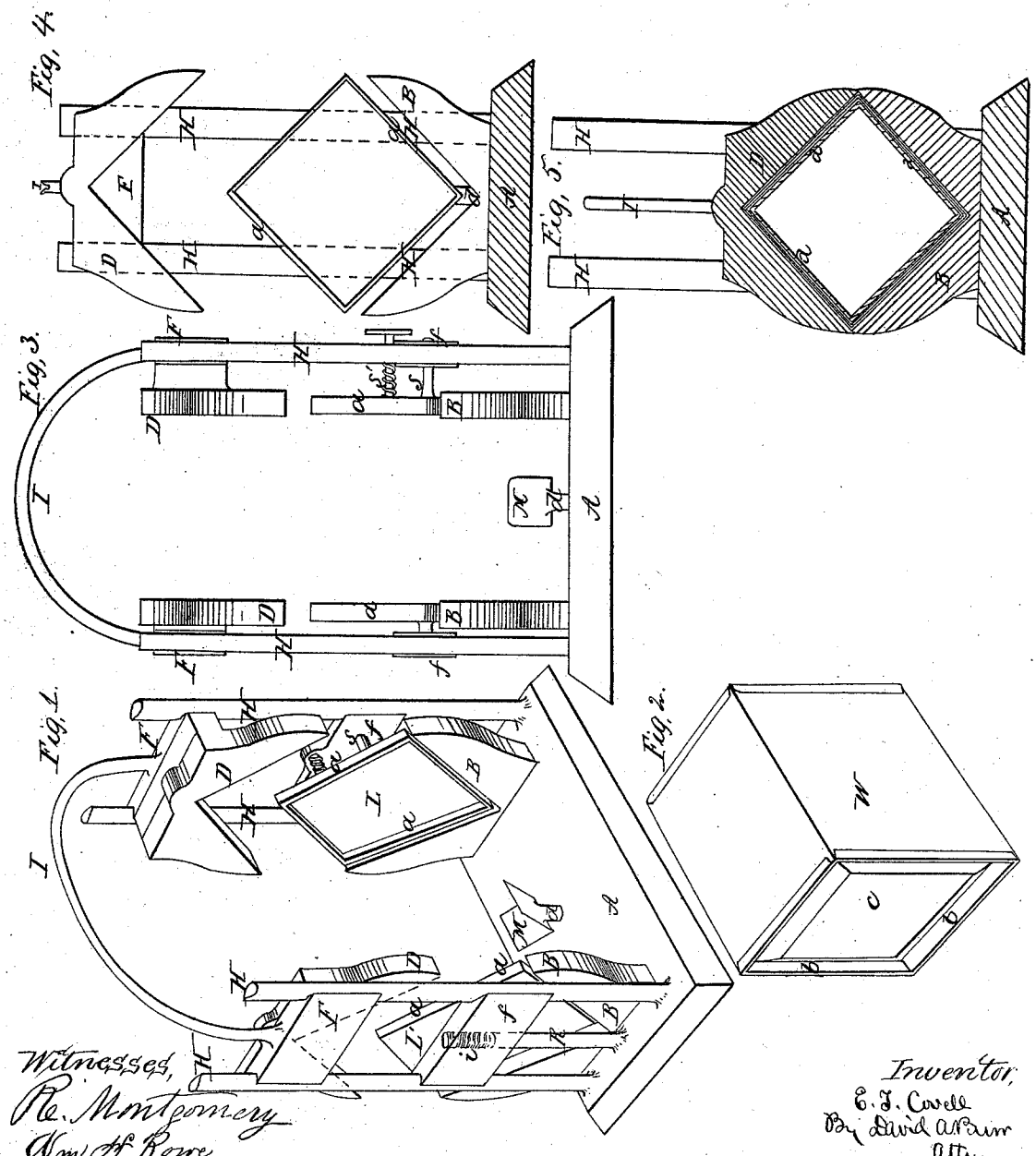

Witnesses,
R. Montgomery
Wm. H. Rowe.

Inventor,
E. T. Covell
By David A. Burr
Atty.

N. PETERS, PHOTO-LITHOGRAPHER, WASHINGTON, D. C.

Sheet 2-2 Sheets.

E. T. Covell.

Seaming Metallic Vessels.

No. 94,947. Patented Sept. 21, 1869.

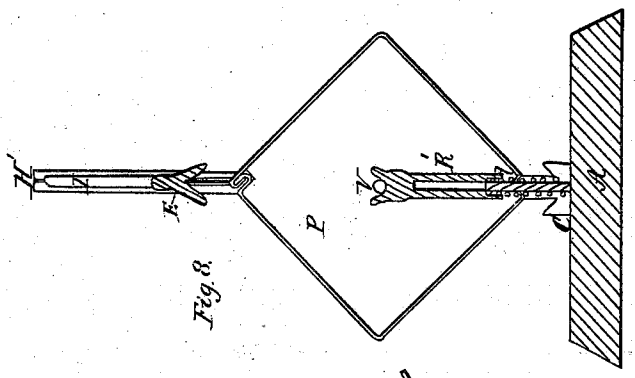

Fig. 8.

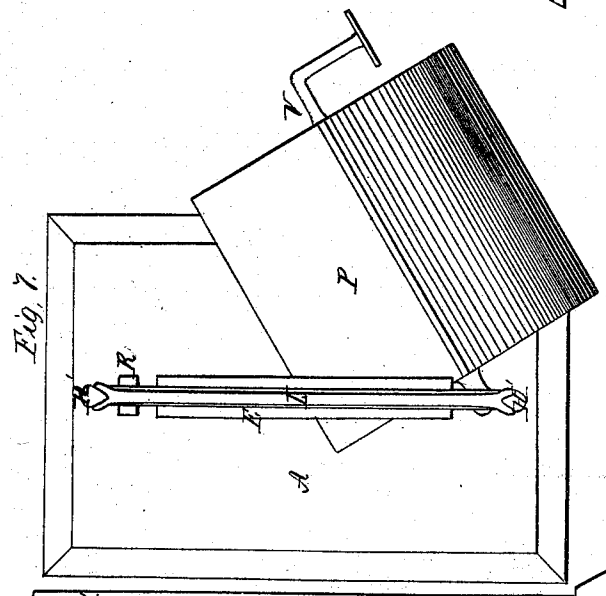

Fig. 7.

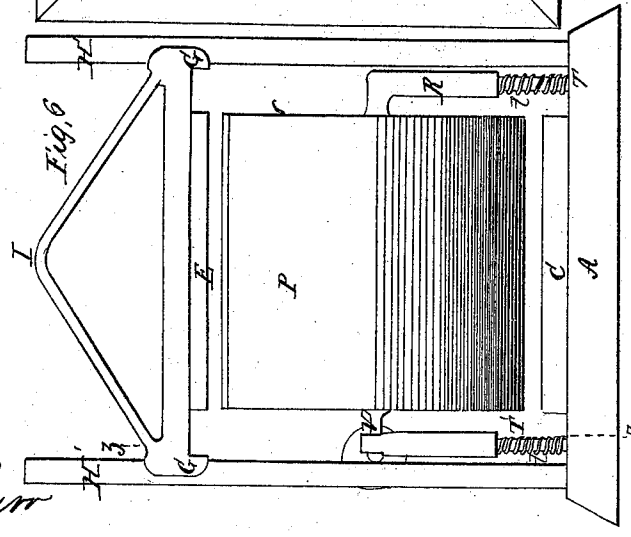

Fig. 6

Witnesses,
Wm. F. Rome,
Shields Burr

Inventor,
E. T. Covell
By D. A. Burr
Atty

N. PETERS, PHOTO-LITHOGRAPHER, WASHINGTON, D. C.

United States Patent Office.

E. T. COVELL, OF BROOKLYN, NEW YORK.

Letters Patent No. 94,947, *dated September* 21, 1869; *antedated September* 10, 1869.

IMPROVEMENT IN MACHINE FOR CLOSING THE SEAMS OF METALLIC VESSELS.

The Schedule referred to in these Letters Patent and making part of the same.

To all whom it may concern:

Be it known that I, E. T. COVELL, of the city of Brooklyn, in the county of Kings, and State of New York, have invented a new and useful Machine for Closing and Pressing the Seams of Metallic Vessels; and I do hereby declare the following to be a full and exact description thereof, reference being had to the accompanying drawing, forming a part of this specification in which—

Figure 1, sheet 1, is a perspective view of my improved seam-closing and pressing-machine, as constructed for closing the seams at the top and bottom or ends of square metallic vessels;

Figure 2, a perspective view of a can with its heads or ends placed loosely thereon, ready for being pressed and closed;

Figure 3, sheet 2, a side elevation of the machine illustrated by fig. 1;

Figure 4, a transverse section in the line *x x* of fig. 3, with the drop-plates elevated;

Figure 5, a similar section in the line *y y* of fig. 3, illustrating the drop-plates down, and the seams of the machine closed thereby;

Figure 6, sheet 3, an elevation of the machine as constructed for closing the side seams of a rectangular can;

Figure 7, a top or plan view thereof, illustrating the mandrel when turned aside to receive the body of the can; and

Figure 8, a transverse section in the line *z z* of fig. 6.

Similar letters indicate like parts in all of the figures.

The nature of my invention consists in the combination of opposite suitably-formed compressing-plates, with intermediate supporting-plates, or an intermediate mandrel, so as to compress and close the open folds, seams, or joints of a sheet-metal can placed upon the mandrel, or between and over the edges of the supporting-plates.

One of the compressing-plates is so sustained as to serve as an anvil, and the desired pressure is obtained by the movement of the opposite plate. The supporting-plates, or the mandrel, may be placed upon spring supports, so that when relieved from pressure they will rise and remain clear of the anvil-plates, to admit of a ready removal of the metallic vessel, and the insertion of another.

Where the machine is constructed to close seams upon the body of the can, the mandrel to support the body is so pivoted as that it may swing aside to receive or deliver the can.

An elastically-yielding central support may be combined with the bed of the machine employed for closing the seams of the heads of the can, to afford intermediate support for the can between its ends whilst in the machine.

The invention is applicable, with but slight variations in the arrangement of the parts of the machines, in closing and finishing the joints or seams both upon the sides or side edges of any description of sheet-metal vessel, before the ends or heads are secured thereto, and at the ends or heads of such as are made with projecting joints.

In the accompanying drawings—

A represents the solid bed-plate of my machines.

Upon this bed-plate are secured fixed anvil-plates, B B, fig. 1, and C, fig. 6, against which the open joints of the seams are forced or compressed on one side.

Corresponding drop or compressing-plates, D D, fig. 1, and E, fig. 6, to bear down, compress, and close the open joints of the seams, are secured to guide-plates, F F, fig. 1, and G G, fig. 6, sliding vertically between or upon ways in or on standards, H H, and H′ H′, projecting from the bed-plate A, close to the transverse anvil-plates B B, (see fig. 1,) on the outside thereof, or at the ends of the longitudinal anvil-plate C. (See fig. 6.)

These anvil and drop-plates are so notched or grooved as to embrace and fit closely and accurately upon the seams or joints along the entire extent thereof, so as to bear evenly upon every point of the joint conformably thereto.

The guide-plates F F and G G are, in each machine, united by or secured to a bent or curved connecting and lift-bar, I, whereby they are connected to any suitable form of drop-press.

In the machine illustrated in fig. 1, for closing the end or head seams or joints of metallic cans, secondary guide-plates, *f f*, corresponding in general form and proportions to the drop guide-plates F F, are fitted between the vertical standards H H, to move in or upon ways thereon, and made to rest upon central intermediate standards, R R, whose upper ends pass into recesses in said plates, and bear against spiral springs, *i i*, fig. 1, (see red lines,) therein.

These secondary guide-plates *f f* carry rectangular supporting-plates, L′ L, having projecting rims, *a a*, so made as to fit closely under the projecting-fold *b* forming the joint of the heads of the can with the body thereof. (See fig. 2.)

One of these supporting-plates L′ is fastened rigidly to its guide-plate over one of the anvil-plates, B. The other, L, is held in place horizontally by means of rods or pins, *s s′ s*, projecting therefrom, which pass through the opposite guide-plate in such manner as to allow a horizontal movement of the plate L to and from its guide-plate.

The movement may be obtained by means of any

suitable mechanical device applied to the central rod or pin *s'*, such as a lever and treadle, a toggle-joint lever, a suitably-arranged cam, &c., or simply and directly by a button to be worked by hand, as illustrated in fig. 3 of the drawings.

A spring, *c*, interposed between the supporting and guide-plate serves to keep the former pushed forward to the plane of the anvil-plate at that end of the machine when not drawn back by the operator.

An auxiliary central support, M, may be placed midway between the supporting end-plates L' L, upon the bed-plate A, to sustain the can centrally.

This central support M is secured to a rod, *d*, passing down into a recess in the bed-plate, and resting therein on a coiled spring, as illustrated in red lines, fig. 3, so that it shall afford an elastically yielding support coinciding with that of the supporting-plates L' L.

In operating the machine for closing the end seams of cans, (see fig. 1,) the drop-plates D D are first elevated by the machinery of the drop-press connected with the lift-bar I.

The supporting-plates L' L, relieved from the pressure of the drop-plates D D, will be forced upward by their springs, *i i*, clear of the anvil-plates B B, to permit a ready adjustment of the unfinished can, W, fig. 2, in place thereon. (See figs. 1, 3, and 4.)

To make this adjustment, the movable supporting-plate L is withdrawn horizontally by means of a treadle actuating the rod *s'*, or by any other suitable means, sufficiently far to admit one head or end, *c*, of the can W, fig. 2, to be placed against the fixed supporting-plate L', which, being done, the movable plate L is allowed to spring back against the opposite head of the can, thereby supporting it ready for the action of the press.

The drop-plates D D are then made to fall with heavy weight, and striking the uppermost seams at the edges of the can, will press and close them down tightly, and at the same time force down the lower seams against and upon the anvil-plates B B, so as, in like manner, to press and close these also.

The joints being thus closed and finished, the drop-plates are elevated; the springs of the supporting-plates will then lift them, and the attached can, clear of the anvil-plates, so that, by withdrawing the movable supporting-plate the finished can may be readily removed and replaced by another.

The machine illustrated in figs. 6, 7, and 8 differs from that illustrated in fig. 1, in that the drop and anvil-plates extend longitudinally over and upon the bed-plate, instead of transversely, so as to bear longitudinally upon a can placed between them; and a pivoted mandrel, P, is substituted for the supporting-plates L' L of the head-machine.

This mandrel P is of the same form, externally, as the body of the can to be operated upon, (either cylindrical, elliptical, or square, &c., and is secured at one end to a tubular support, R, fitting over, and receiving the end of a standard, T, so as to swing horizontally thereon.

A handle, V, is fitted to the other end of the mandrel, and a rest or fork upon the end of a second tubular support, R', fitting over a standard, T', is provided to receive and support this handle V, and consequently uphold that end of the mandrel when it is in position to receive the blow of the drop-plate, as illustrated in figs. 1 and 8.

Spiral springs, *t t*, are placed about the standards T T, upon which the tubular supports R R' rest. These springs serve to bear up the mandrel when relieved from pressure above and clear of the anvil-plate A below.

The drop-plate E is made to slide freely in or upon ways between upright standards, H' H', and is provided with a lift-bar, I, to connect it with a suitable drop-press.

The drop and anvil-plates are grooved longitudinally to fit over, and embrace closely the seams or joints in the body of the can to be operated upon, and are properly shaped to fit the form of seam to be closed, whether it be at the angle of a can, as seen at figs. 6, 7, and 8, or upon the side of a cylindrical, elliptical, or flat-sided can.

The operation of this machine is similar to that of the machine illustrated in fig. 1, for closing the end joints of cans.

The body of the can, without its heads, is slipped over, and upon the mandrel P, which is swung out upon its pivot, for the purpose as illustrated in fig. 7. The mandrel is then swung back in line between the drop and anvil-plates, and its handle, V, placed upon the support R'. The drop-plate E is then allowed to fall upon the can, and striking its open joint, will press and close down the edges thereof.

Where there are four seams on the body of the can, the mandrel may be provided with a joint at its pivot-end, to permit a semi-revolution thereof on its axis, and when two of the seams have been closed, as described, the other two may be brought in place to be also closed, by a partial revolution of the mandrel, without removing the body of the can therefrom.

The mandrel P, or the supporting-plates L L', and the anvil and drop-plates may all be so secured as to admit of being detached and replaced by other forms or sizes thereof, to work upon various forms and sizes of cans with the same machine. I contemplate the use of the machines in folding and closing all manner of seams in metallic vessels, and upon round, flaring or straight edges.

It is evident that the machines may be arranged in such manner as the compressing-plates shall move and close upon the seams of the can or other vessel horizontally instead of vertically; that both the "anvil" and "drop-plates" may be made movable instead of the "drop-plates" alone, and that any suitable means of obtaining pressure may be employed without departing from my invention, and I contemplate all such variations in the arrangement and operation of my machines, and of the devices therein made use of.

Having thus fully described my invention,

I claim therein as new, and desire to secure by Letters Patent—

1. One or more movable or stationary, notched or grooved "anvil" or bed-plates, in combination with one or more opposite and correspondingly-notched or grooved "drop-plates," and with intermediate fixed or movable "supporting-plates" or mandrel, when said compressing "anvil" and "drop"-plates are arranged in pairs to meet, embrace, and close upon opposite points on the sides, or upon the edges or angles of a metallic vessel sustained by said intermediate supporting-plates or mandrel, so as to compress and close the seams of the vessel, all substantially as herein described.

2. In combination with compressing "anvil" and "drop"-plates, arranged and operating to close the joints at the ends of a metallic vessel, an elastically yielding, grooved, or notched central supporting-plate, M, substantially as herein described.

3. In combination with compressing "anvil" and "drop"-plates, operating substantially as herein described, to close the end joints of metallic vessels, elastically-yielding sustaining or supporting-plates, L L', arranged at right angles thereto, to receive and support the projecting edges of the joints at the ends of the vessel, and to be removed therefrom at pleasure, substantially in the manner herein set forth.

4. In combination with "anvil" and "drop"-plates operating to close the side seams or seam of a metallic

vessel, substantially as herein described, a central, inner-supporting block or mandrel, pivoted and supported at right angles thereto, upon elastically-yielding supports to receive and sustain the metallic vessel under the operation of said plates, substantially as herein set forth.

The foregoing specification of my improved apparatus for pressing and finishing the seams of metallic vessels, signed by me, this 1st day of February, 1869.

E. T. COVELL.

Witnesses:

GEORGE L. DOTEN,

JAMES NADDY.