F. A. NELSON & E. T. FLATEBOE.

CAR FENDER.

APPLICATION FILED OCT. 3, 1912.

1,069,023.

Patented July 29, 1913.

4 SHEETS—SHEET 1.

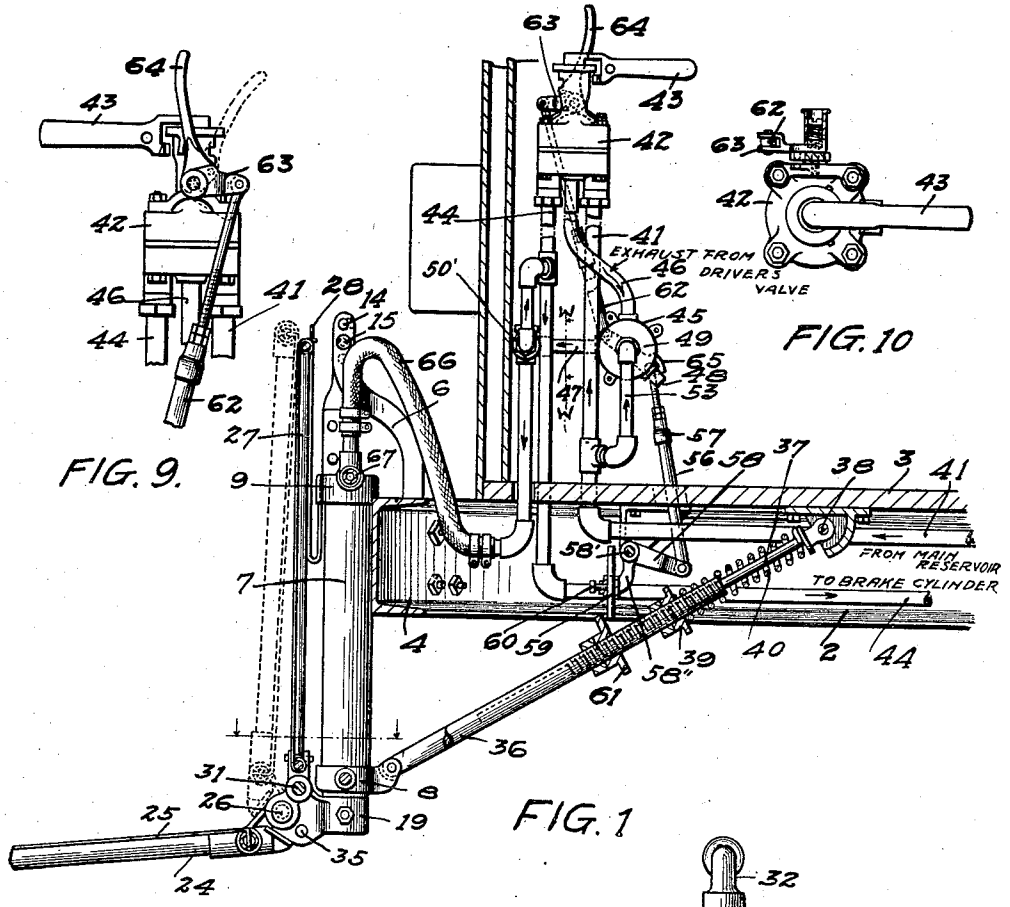

FIG. 9.

FIG. 10

FIG. 1

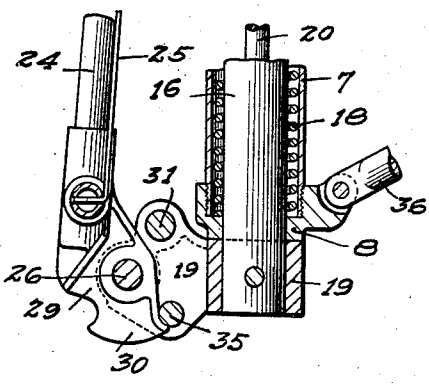

FIG. 6.

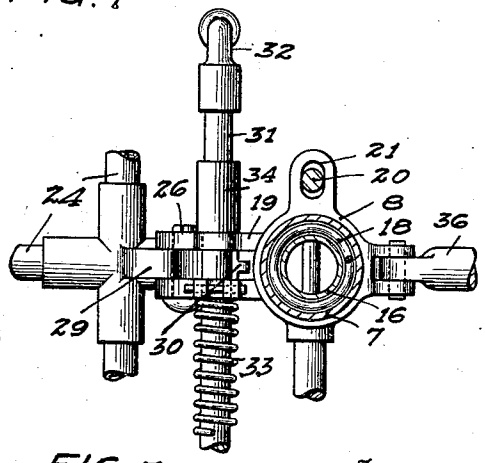

FIG. 7.

Witnesses

James E. Sproll.

E. A. Paul

Inventors

Frank A. Nelson.

Einar T. Flateboe.

By Paul & Paul

Attorneys

COLUMBIA PLANOGRAPH CO., WASHINGTON, D. C.

F. A. NELSON & E. T. FLATEBOE.

CAR FENDER.

APPLICATION FILED OCT. 3, 1912.

1,069,023.

Patented July 29, 1913.

4 SHEETS—SHEET 2.

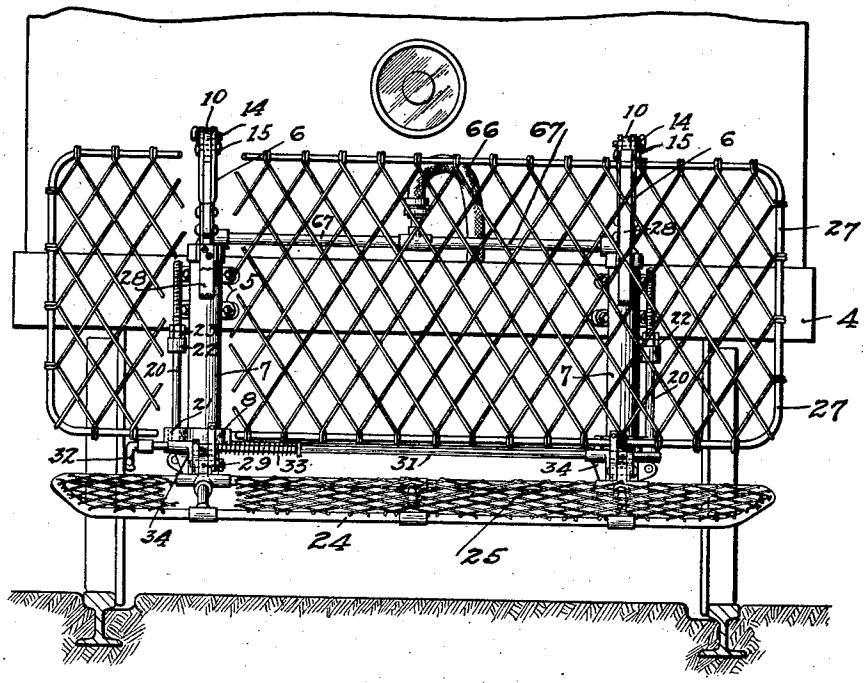

FIG. 2.

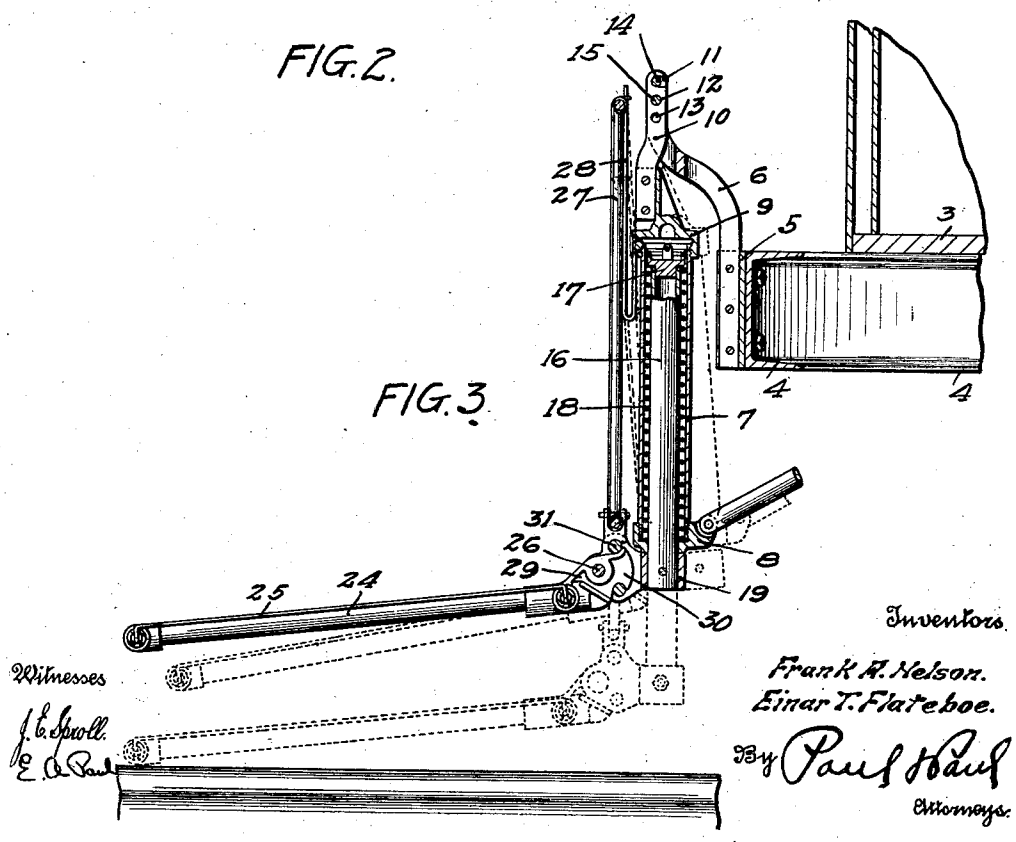

FIG. 3.

Witnesses

J. C. Sproll.

E. A. Paul

Inventors.

Frank A. Nelson.

Einar T. Flateboe.

By Paul & Paul

Attorneys.

F. A. NELSON & E. T. FLATEBOE.

CAR FENDER.

APPLICATION FILED OCT. 3, 1912.

1,069,023.

Patented July 29, 1913.

4 SHEETS—SHEET 3.

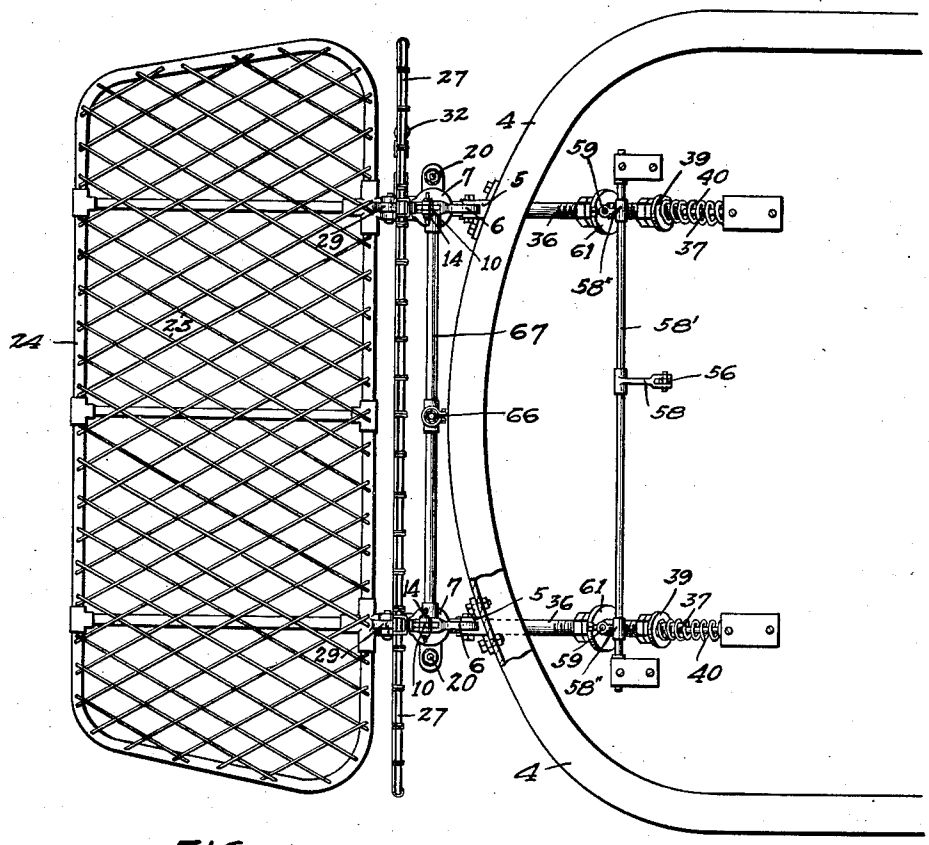

FIG. 4.

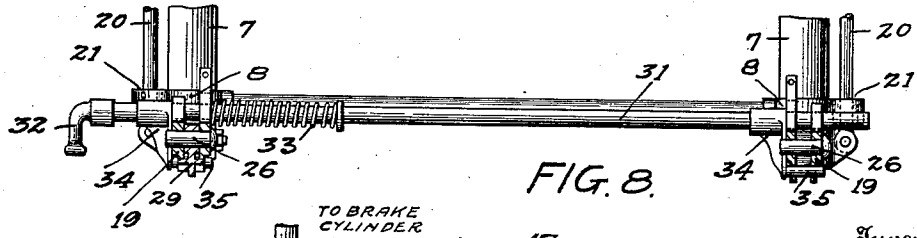

FIG. 8.

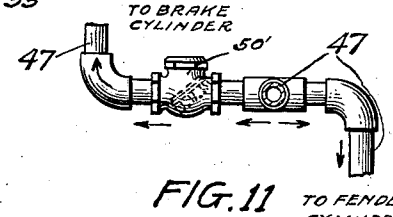

FIG. 11
W-W

Witnesses

James C. Sproll.

E. A. Paul

Inventors

Frank A. Nelson.

Einar T. Flatebоe.

By Paul & Paul

Attorneys

F. A. NELSON & E. T. FLATEBOE.

CAR FENDER.

APPLICATION FILED OCT. 3, 1912.

1,069,023.

Patented July 29, 1913.

4 SHEETS—SHEET 4.

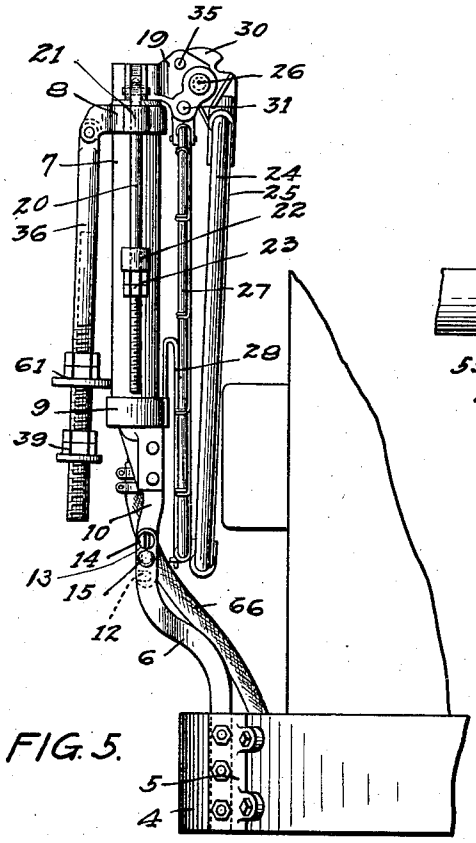

FIG. 5.

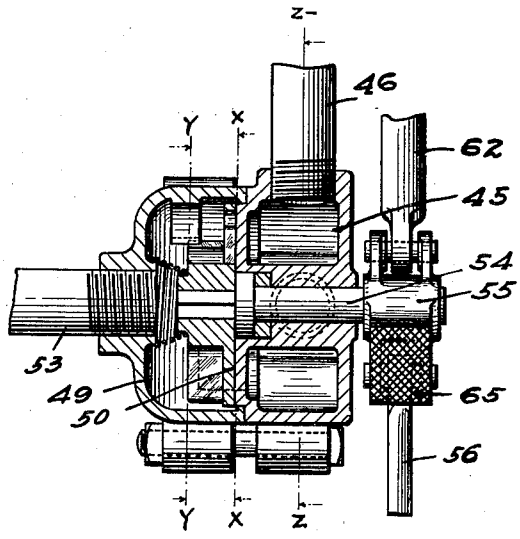

FIG. 12.

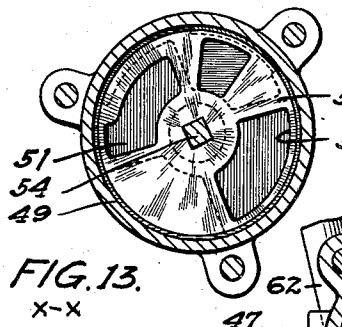

FIG. 13.
X-X

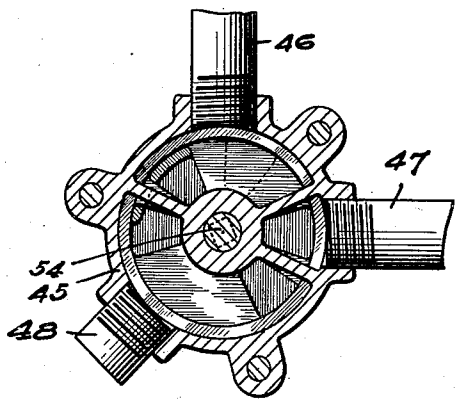

FIG. 15
Z-Z

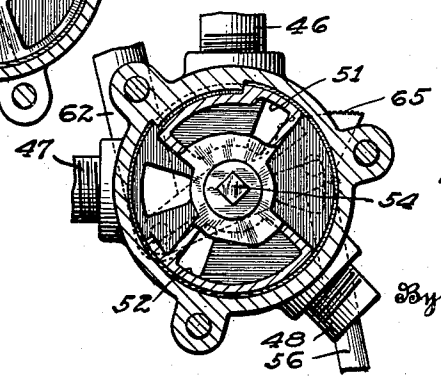

FIG. 14.
Y-Y

Witnesses

James E. Scroll.

E. A. Paul

Inventors

Frank A. Nelson.

Einar T. Flateboe.

By Paul & Paul

Attorneys.

COLUMBIA PLANOGRAPH CO., WASHINGTON, D. C.

UNITED STATES PATENT OFFICE.

FRANK A. NELSON, OF MINNEAPOLIS, MINNESOTA, AND EINAR T. FLATEBOE, OF SEATTLE, WASHINGTON, ASSIGNORS, BY MESNE ASSIGNMENTS, TO AMERICAN SAFETY FENDER COMPANY, OF SEATTLE, WASHINGTON, A CORPORATION OF WASHINGTON.

CAR-FENDER.

1,069,023. Specification of Letters Patent. Patented July 29, 1913.

Application filed October 3, 1912. Serial No. 723,743.

To all whom it may concern:

Be it known that we, FRANK A. NELSON, of Minneapolis, Hennepin county, Minnesota, and EINAR T. FLATEBOE, of Seattle, King county, Washington, have invented certain new and useful Improvements in Car-Fenders, of which the following is a specification.

Our invention relates particularly to fenders for use on street cars and the objects of the invention are, First, to provide a fender normally depending in its operative position in front of the car bumper but adapted to be raised or swung to an elevated, inoperative position to allow the draft bar of one car to be easily and quickly attached to another car. Second, to provide a fender in which the mechanism for tripping the fender in case of an obstruction on the track is embodied in the fender itself, thereby eliminating a large number of independent parts. Third, to reduce to a minimum the weight of the fender and its connections, thereby reducing the cost of manufacture and the load to be carried by the car frame.

Other objects of the invention will appear from the following detailed description.

The invention consists generally in various constructions and combinations, all as hereinafter described and particularly pointed out in the claims.

In the accompanying drawings forming part of this specification, Figure 1 is a sectional view of the forward portion of a car, illustrating the application of our improved fender thereto, Fig. 2 is a front elevation of the car, showing the fender in its normal or running position, Fig. 3 is a detail sectional view, showing the position of the fender in its normal or running position and in dotted lines indicating the position the fender assumes when it strikes an obstruction on the track and also showing in dotted lines the depressed position of the fender or when it is lowered upon the track rails. Fig. 4 is a plan view of the fender and the forward portion of the car frame, the platform at the forward portion of the car being omitted to illustrate the connection of the fender cylinders therewith, Fig. 5 is a detail view showing the fender swung to its elevated or inoperative position, allowing convenient access to the draft bar and bumper, Fig. 6 is a detail view showing the manner of supporting the fender apron on the cylinder plungers, Fig. 7 is a detail view, partially in section, showing the connection at one end of the fender apron with the cylinder piston brackets and the device for locking the fender in its lowered or horizontal position, Fig. 8 is a detail view showing the fender locking rod and the manner of mounting the same in the cylinder piston brackets, Figs. 9 and 10 are detail views showing the connection of the fender controlling valve with the controlling valve of the car, Fig. 11 is a detail view showing the pipe connections between the controlling valve and the fender and brake cylinders, on the line *w—w* of Fig. 1, Fig. 12 is a sectional view of the fender valve, showing the valve lever and a portion of the trip rod running to the motorman's valve and to the trip shaft under the car. Fig. 13 is a sectional view of the valve, showing the rotary valve resting on the valve seat, on the line *x—x* of Fig. 12, Fig. 14 is a similar view, showing the valve in its operative position, the port in the rotary portion of the valve registering with the port in the valve seat leading to the fender and brakes, the other ports being closed, on the line *y—y* of Fig. 12, Fig. 15 is a sectional view showing the valve in its inoperative position, the rotary valve lapping the fender port and all the other ports being in register, on the line *z—z* of Fig. 12.

In the drawing, 2 represents the forward portion of a car frame, having the usual platform 3 and bumper 4. On each side of the middle portion of the bumper castings 5 are secured, and to these castings brackets 6 are preferably bolted, extending upwardly and forwardly. (See Fig. 3.) In front of these brackets we provide the fender cylinders. Each cylinder is preferably composed of a section of tubing 7 having cast metal heads 8 and 9 which are screwed on to the ends of the tubing, this construction being much lighter than a cylinder composed entirely of cast metal. Each of the heads 9 preferably has a bifurcated hanger 10 secured thereto and projecting upwardly therefrom and provided with slots 11 and with holes 12 and 13. Locking pins 14 are adapted to fit into the slots 11 and into the

pair of brackets 6, said slots allowing the fender cylinders to swing backwardly on their pivots when the fender strikes an obstruction on the track, as will hereinafter appear.

15 represents pins fitting into the holes 12 in the hangers 10 and passing through the brackets and forming therewith pivots on which the fender may swing to a raised, inoperative position when the locking pins 14 are removed. (See Figs. 3 and 5). When the fender has been swung to the position indicated in Fig. 5 the locking pins 14 will be inserted into the holes 13 and corresponding holes in the brackets 6, thereby locking the fender and its connections in an elevated position above the bumper and where it will not in any way interfere with the attachment of the car to another car.

Within the fender cylinders we provide pistons 16 having heads 17 at their upper ends between which and the cylinder castings 8 coiled springs 18 are preferably arranged. The springs serve to hold the pistons in their raised position until such time as the fluid pressure is admitted to the cylinders, when they will be forced down to lower the fender to the track.

At the lower ends of the pistons we prefer to provide brackets 19 rigidly secured thereto and provided with rods 20 which are pivotally connected at one end to said brackets and are slidable in guides 21 on the cylinder castings 8. These rods are preferably threaded at one end and provided with collars 22 and lock nuts 23. The collars may fit snugly so as to hug the rods by friction, or may fit to move freely, as desired, and are adapted to contact with the guides 21 and limit or cushion the downward movement of the pistons, the stroke being regulated by the adjustment of the lock nuts 23. In this way the stroke of the pistons may be varied according to the height of the cylinders from the track.

24 represents the fender apron frame, composed, preferably, of tubing and having the usual filler 25 of wire mesh or other suitable material. This frame is bent to the desired form and the use of tubing in its construction reduces considerably the weight of the fender. The rear end of the fender frame is supported on the piston brackets 19 by means of pivot pins 26 which allow the frame to be swung vertically to the position indicated in dotted lines in Fig. 1. We prefer also to provide a guard frame 27 in the rear of the fender apron frame, mounted at its lower end upon the brackets 19 and adapted to slide vertically with the cylinder pistons on guides 28 which are preferably mounted on the upper heads of the cylinders. (See Fig. 3). This guard 27 is designed to protect the person picked up by the fender from becoming injured through contact with the bumper or with the fender cylinders. The rear edge of the fender apron frame 24 is preferably provided with castings 29 in which the pivots 26 are mounted and these castings have rearwardly projecting webs 30. A rod 31 is slidable in holes provided in the piston brackets and extends transversely of the car and is adapted to project over the webs 30 and limit the downward swinging movement of the fender apron frame. (See Figs. 2, 3 and 8). This rod has a hand grip 32 at one end for convenience in moving it lengthwise to release the fender apron frame and a spring 33 normally holds the rod in its locking position. (See Fig. 8). We also prefer to provide brackets 34, on said rod, carrying pins 35 which are adapted to enter sockets in the piston brackets and extend beneath the webs 30 of the fender apron frame, thereby locking this frame against vertical, swinging movement. (See Figs. 3 and 8). When, therefore, the rod pins are in the position shown in Figs. 3 and 8, the fender apron frame will be positively locked against vertical movement on its pivots, but as soon as the rod is withdrawn the fender apron frame is free to tilt and may be swung to the position indicated by dotted lines in Fig. 1. This pin also serves to lock the fender apron frame in its raised or vertical position. (See Fig. 6).

It is desirable in an apparatus of this kind to provide some means for automatically tripping the fender in case it strikes an obstruction on the track, and it is also desirable that such means be extremely simple in construction and capable of positive action without increasing materially the weight of the fender mechanism. With this end in view, (referring to Fig. 1), we provide tubes 36 pivotally connected at their lower ends with the lower heads of the fender cylinders. The upper ends of these tubes are preferably threaded and adapted to telescope with rods 37 which are pivotally connected with the car platform 3 at 38. Lock nuts 39 are mounted on the threaded ends of the tubes 36 and springs 40 are interposed between these lock nuts and the ends of the rods 37 to yieldingly hold the tubes and rods against a telescoping movement. The tension of these springs may be regulated by the adjustment of the lock nuts 39. The pivotal connections of the cylinder with the brackets 6 allow the fender and cylinders to swing backwardly to the position indicated by dotted lines in Fig. 3 when the fender strikes an obstruction on the track, and during this movement the tube 36 will be moved lengthwise, putting the spring 40 under compression. This lengthwise movement of the tube 36 we utilize to trip the fender controlling valve and admit fluid pressure to the cylinders, and the mecha-

nism which we prefer to employ for this purpose we will now describe in detail.

Referring to Fig. 1, 41 represents a pipe leading from the main air reservoir of the car to the driver's controlling valve 42. This valve is of ordinary construction and of the type usually employed in connection with the air brake system of a car. It is unnecessary, therefore, to illustrate or describe it in detail. It is provided with the usual controlling lever 43 and a pipe 44 leads from the valve to the brake cylinder, not shown. The fender controlling valve has a casing 45 having ports for connection with an exhaust pipe 46 from the driver's controlling valve, a pipe 47 leading to the fender cylinders, and an exhaust pipe 48. A hood or bonnet 49 is provided at one side of said casing and contains a rotary valve 50 having ports 51 and 52 therein which communicate with similar ports in a valve seat provided in the casing 45. Fluid pressure is supplied to the valve 50 through a pipe 53 leading from the main reservoir pipe 41. A check valve 50′ is interposed in the pipe connection 47 between the fender controlling valve and the brake cylinder pipe to prevent the fluid pressure from flowing backwardly from the brake cylinder pipe to the valve and the fender cylinders, thereby allowing the brakes to be set in the ordinary way by the movement of the motorman's valve without operating the fender controlling valve or the fender. When the fender controlling valve is operated, the fluid pressure will then flow through this valve to the fender cylinders and through the check valve to the brake cylinder pipe to set the brakes and drop the fender simultaneously.

The valve 50 is preferably provided with a stem 54 having a double crank arm 55 mounted thereon. (See Fig. 12.) A rod 56 having a turn buckle adjusting means 57 connects one end of said crank and with an arm 58 secured on a rock shaft 58′ which is mounted under the car platform. (See Fig. 4). Arms 58″ are secured on said rock shaft and carry a pin 59 adjustable longitudinally by means of a set screw 60 and in the path of a collar 61 adjustably mounted on the tube 36. When, therefore, this tube is moved lengthwise by the rocking of the fender and cylinders, the pin 59 will be struck to rock the bell crank and rotate the valve and admit fluid pressure to the fender cylinders and depress the pistons and fender. The longitudinal adjustment of the pin 59 allows its position to be changed to vary the time of contact of the collar 61 therewith. The other end of the double crank arm 55 is connected by an adjustable rod 62 with an arm 63 that is mounted on the casing of the driver's controlling valve and has an operating lever 64 by means of which the driver may rotate the fender controlling valve, as desired. We prefer also to provide a treadle surface 65 on the crank arm 55 by means of which the driver may rotate the fender controlling valve with his foot and admit fluid pressure to the fender cylinders.

The pipe 47 has a flexible hose connection 66 which leads to a horizontal pipe 67 that is mounted in the upper heads of the fender cylinders and communicates with the cylinders above the pistons. When, therefore, fluid pressure is admitted to the pipe 47 it will flow down simultaneously into the path of the cylinders to depress the pistons and the fender apron frame. This flexible connection 66 permits the fender apron frame to be raised or lowered without disturbing the other fluid pressure attachments. At the same time the fluid pressure will be admitted to the brake cylinder pipe to set the brakes.

In the operation of the device, assuming that the fender is in the position indicated by full lines in Fig. 3, if the driver operates the fender controlling valve and admits fluid pressure to the cylinders the pistons will be forced down to the position shown by dotted lines in Fig. 3, lowering the fender apron frame to the track. If the fender apron frame should strike an obstruction on the track, as, for instance, a person lying or walking thereon, the pressure of the fender will force it and the cylinders backwardly to the position shown by dotted lines in Fig. 3, and this movement will operate the fender controlling valves through the mechanism described, admit fluid pressure to the cylinders and depress the fender apron frame as before, without, however, any attention on the part of the driver, the entire operation being automatic, the fender apron frame being tripped by striking the obstruction on the track.

In case the car becomes disabled and it is desired to attach it to another car, the fender apron frame and cylinders may be easily and quickly swung to the position shown in Fig. 5, the tubes 36 being easily and quickly disconnected from the rods 37. When the fender and cylinders are raised to this position and secured by the locking means described, they will be entirely above the level of the car platform and bumper and the draft bar of one car can be easily and quickly attached to the other car and the car operated in precisely the same manner, as if no fender were attached to it.

We do not wish to be confined to the details of construction herein shown and described, as in many ways they are capable of modification and will still be within the scope of our invention.

We claim as our invention:

1. The combination, with a car frame and

bumper, of a fender supported in front of said bumper and including fluid pressure cylinders and an apron frame, said fender being capable of movement to an inverted position above the level of said bumper.

2. The combination, with a car frame and bumper, of fluid pressure cylinders hinged thereon, a fender apron frame supported by said cylinders and adapted to swing with said cylinders to an inverted position above the level of said bumper.

3. The combination, with a car frame and bumper, of hinged fluid pressure cylinders, a fender apron frame carried by said cylinders and adapted to swing therewith to a position above the level of said bumper, and means for locking said cylinders and fender apron frame, in their raised inoperative position.

4. The combination, with a car frame and bumper, of fluid pressure cylinders hinged thereon, a fender apron frame carried by said cylinders and adapted to swing therewith to an inverted, inoperative position above said bumper, and locking pins for securing said cylinders and fender apron frame in their raised, inoperative position.

5. The combination, with a car frame and bumper, and brackets mounted on said bumper, of fluid pressure cylinders hinged on said brackets, a fender apron frame carried by said cylinders and adapted to swing therewith to an inverted, inoperative position above the level of said bumper.

6. The combination, with a car frame and bumper, and brackets mounted on said bumper, of fluid pressure cylinders having hangers secured thereto and pivotally connected with said brackets, a fender apron frame carried by said cylinders and adapted to swing therewith to an inverted inoperative position above the level of said bumper.

7. The combination, with a car frame and bumper and brackets mounted thereon, of a fluid pressure cylinder having hangers pivotally connected with said brackets, a fender apron frame carried by said cylinders and adapted to swing upwardly therewith to an inverted, inoperative position above the level of said bumper, and locking pins passing through said hangers and said brackets for locking said cylinders and fender apron frame in their raised, inoperative position.

8. The combination, with a car frame and bumper, of fluid pressure cylinders hinged thereon, pistons for said cylinders, a fender apron frame carried by said pistons and adapted to swing therewith and with said cylinders to a raised, inoperative position above the level of said bumper.

9. The combination, with a car frame and bumper, of fluid pressure cylinders hinged thereon, pistons for said cylinders, a fender apron frame carried by said pistons, fluid pressure and brake cylinder pipes, a controlling valve connected with said pipes and with said cylinders, and means rendered operative by backward pressure on said fender apron frame and cylinders for operating said valve to admit fluid pressure to said cylinders.

10. The combination, with a car frame, of a fluid pressure cylinder mounted thereon, a piston for said cylinder, a fender apron frame carried by said piston, said cylinder and fender apron frame being capable of backward movement upon striking an obstruction on the track, and mechanism actuated by backward pressure on said fender apron frame for admitting fluid pressure to said cylinder.

11. The combination, with a car frame, of cylinders mounted thereon, pistons for said cylinders, a fender apron frame carried by said pistons, a fluid pressure pipe connected with said cylinders, a controlling valve, said fender apron frame being capable of backward movement upon striking an obstruction on the track, and mechanism actuated by the backward movement of said fender apron frame for operating said valve to admit fluid pressure to said cylinders.

12. The combination, with a car frame, of cylinders mounted thereon, pistons for said cylinders, a fender apron frame carried by said pistons, and capable of a limited backward movement, a fluid pressure pipe connected with said cylinders, a controlling valve therefor, means actuated by backward pressure on said fender apron frame for operating said controlling valve to admit fluid pressure to said cylinders, said means being adjustable to regulate the time of operation of said valve.

13. The combination, with a car frame, of cylinders mounted thereon, pistons for said cylinders, a fender apron frame carried by said pistons, and capable of a limited backward movement, spring-pressed tubes connected with said fender apron frame, rods mounted on said frame and adapted to telescope with said tubes, springs arranged to resist the telescoping of said tubes and rods, a fluid pressure pipe connected with said cylinders, a controlling valve, and mechanism actuated by the longitudinal movement of said tubes for operating said valves to admit fluid pressure to said cylinders.

14. The combination, with a car frame and brackets mounted thereon, of fluid pressure cylinders having hangers hinged on said brackets, pistons for said cylinders, a fender apron frame mounted on said pistons and adapted to swing with said cylinders to an inverted, inoperative position, locking pins passing through said brackets and said hangers, said hangers having slots therein to allow disengagement thereof from said locking

pins and backward movement of the lower portion of said cylinders and fender apron frame when the fender apron frame strikes an obstruction on the track, a fluid pressure pipe connected with said cylinders, a controlling valve therefor, and mechanism actuated by the backward movement of said fender apron frame, and cylinders for operating said controlling valve to admit fluid pressure to said cylinders.

15. The combination, with a car frame, of cylinders hinged thereon and capable of an oscillating backward movement, pistons for said cylinders, a fender apron frame carried by said pistons, a fluid pressure pipe connected with said cylinders, a controlling valve therefor, a rock shaft and crank arm thereon connected with said valve, and mechanism actuated by the backward movement of said fender apron frame and cylinders for rocking said shaft and operating said valve to admit fluid pressure to said cylinders.

16. The combination, with a car frame, of a fluid pressure cylinder hinged thereon, a piston therefor, a fender apron frame carried by said piston, a fluid pressure reservoir pipe, a brake cylinder pipe, a fender controlling valve connected with said fluid pressure reservoir pipe and with said cylinder, a brake controlling valve connected with said brake cylinder pipe and also with said fender controlling valve, and mechanism actuated by the backward movement of said fender apron frame under pressure thereon for operating said fender controlling valve and admitting fluid pressure to said cylinder and to said brake cylinder pipe simultaneously.

17. The combination, with a car frame, of a cylinder hinged thereon and having a limited oscillating backward movement, a piston for said cylinder, a fender apron frame carried by said piston, a fluid pressure reservoir pipe connected with said cylinder, a controlling valve for said reservoir pipe, a rock shaft operatively connected with said valve, an arm mounted on said rock shaft, a pin adjustably mounted in said arm and means actuated by the backward movement of said cylinder and fender apron frame under backward pressure for engaging said pin and rocking said shaft to operate said valve and admit fluid pressure to said cylinder.

18. The combination, with a car frame, of a cylinder hinged thereon and having a limited backward movement on its pivot, a piston for said cylinder, a fender apron frame carried by said piston, a tube mounted on said cylinder, means yieldingly resisting backward movement of said tube, a collar adjustably mounted on said tube, a fluid pressure reservoir pipe connected with said cylinder, a controlling valve therefor, and mechanism actuated by said collar upon the backward movement of said tube for operating said valve to admit fluid pressure to said cylinder.

19. The combination, with a car frame and bumper, of a fender supported in front of said bumper and including fluid pressure cylinders and pistons therefor and an apron frame carried by said pistons and having vertical movement therewith, said fender being capable of movement to an inverted position above the level of said bumper.

20. The combination, with a car frame and bumper, of fluid pressure cylinders and pistons therefor, and a fender apron frame connected with said pistons and having a vertical reciprocating movement below the level of the bumper and also having an oscillating movement from its normal position below the bumper to an inverted position above the bumper.

21. The combination, with a car frame and bumper, of a fluid pressure cylinder and piston therefor, and a fender apron frame connected with said piston and having a vertical reciprocating movement below the level of said bumper, and an independent swinging movement from its normal operative position below the bumper to an inverted, inoperative position above the level of the bumper.

In witness whereof, we have hereunto set our hands this 13th day of September, 1912.

FRANK A. NELSON.
EINAR T. FLATEBOE.

Witnesses:
STEPHEN A. BROOKS,
J. W. LYSONS.

Copies of this patent may be obtained for five cents each, by addressing the "Commissioner of Patents, Washington, D. C."