April 11, 1939. A. P. FALL 2,153,863

APPARATUS FOR TRUING PISTONS

Filed Dec. 11, 1936 2 Sheets-Sheet 1

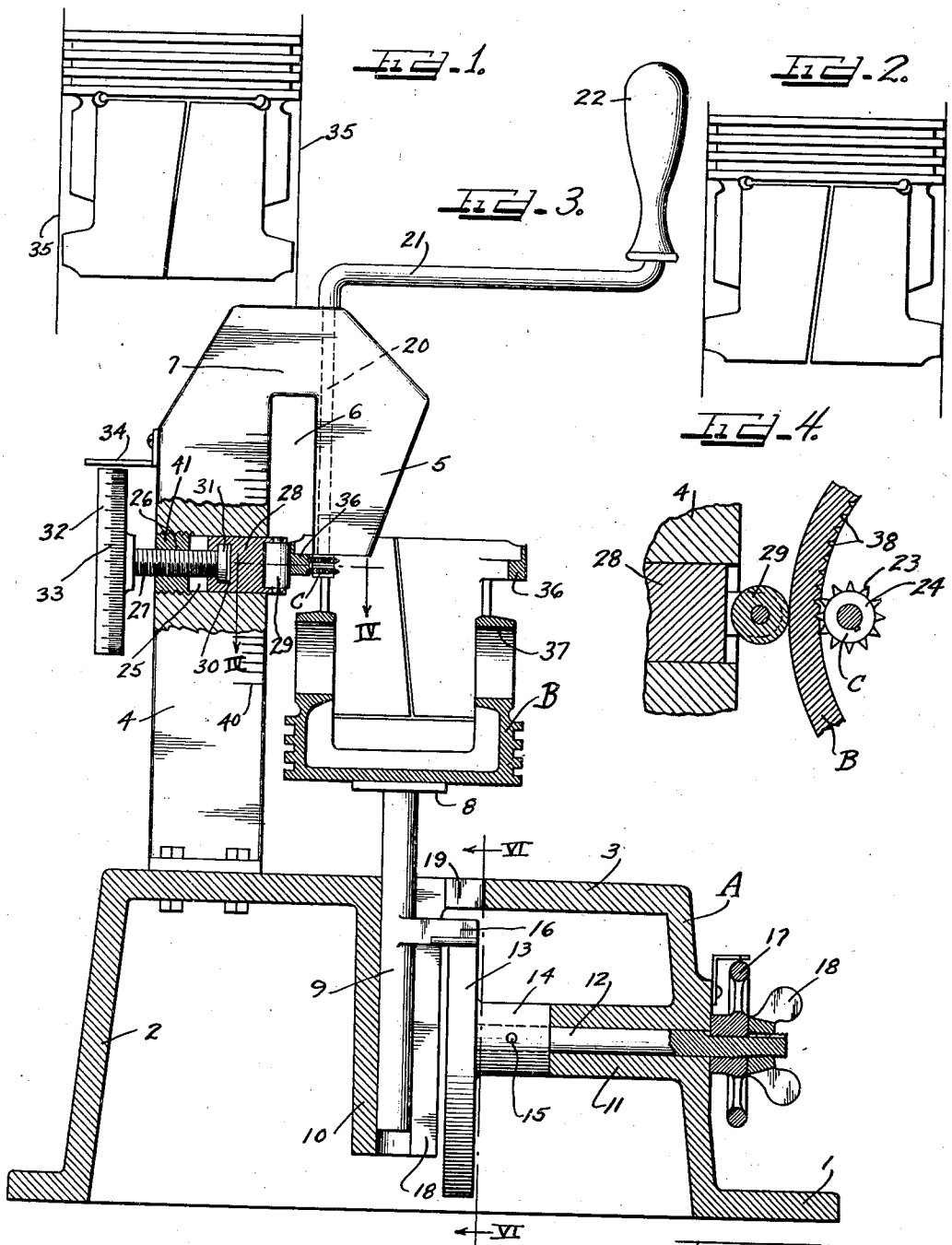

Inventor
ALBERT P. FALL.

by Charles Hollis Attys.

April 11, 1939. A. P. FALL 2,153,863

APPARATUS FOR TRUING PISTONS

Filed Dec. 11, 1936 2 Sheets-Sheet 2

FIG. 5.

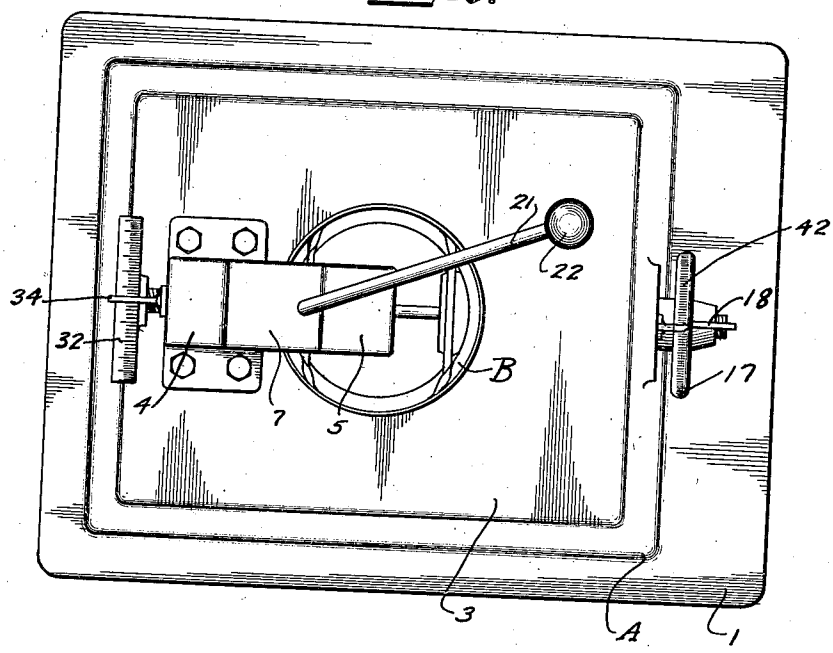

FIG. 6.

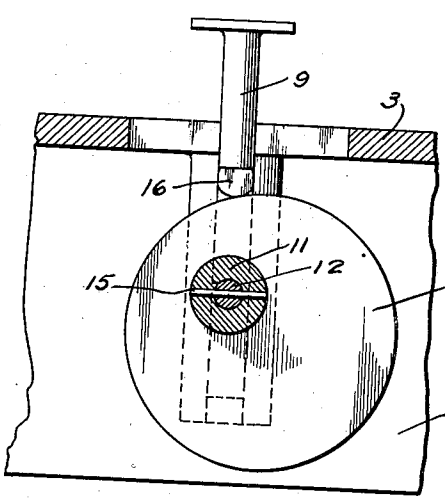

FIG. 7.

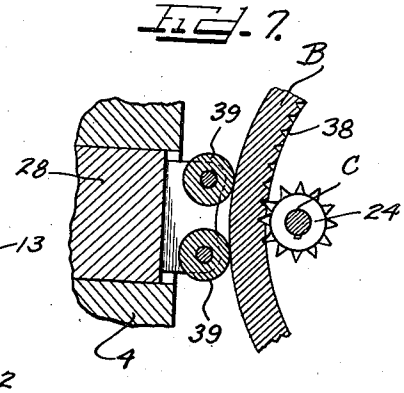

Inventor
ALBERT P. FALL.

by Charles Hill Attys.

Patented Apr. 11, 1939 2,153,863

UNITED STATES PATENT OFFICE

2,153,863

APPARATUS FOR TRUING PISTONS

Albert P. Fall, Toledo, Ohio

Application December 11, 1936, Serial No. 115,360

6 Claims. (Cl. 80—5)

The present invention relates to apparatus for truing pistons, and is primarily concerned with apparatus for expanding the skirts of pistons of internal combustion engines which have collapsed or worn in use, so that the pistons may be continued in use for longer periods of time than otherwise would be the case.

Another object of the present invention is to provide an apparatus by means of which internal combustion engine pistons may be reshaped, for reuse, without damage to the pistons.

A still further object of the present invention is to provide a novel apparatus whereby indentations may be rolled in the inner surfaces of piston skirts for expanding or truing the skirts.

A still further object of the present invention is to provide an apparatus for truing pistons which apparatus is economical to manufacture, easy to use and highly efficient in results accomplished.

The above other and further objects of the present invention will be apparent from the following description and accompanying drawings.

The accompanying drawings illustrate an apparatus constructed in accordance with the principles of the present invention, and the views thereof are as follows:

Figure 1 is an elevational view of a known type of internal combustion engine piston showing its skirt collapsed.

Figure 2 is an elevational view of the piston of Fig. 1 after the skirt has been expanded in accordance with the apparatus of the present invention.

Figure 3 is a view, partially in elevation and partially in section, of an apparatus constructed in accordance with the principles of the present invention.

Figure 4 is an enlarged fragmental transverse sectional view taken substantially in the plane indicated by line IV—IV of Fig. 3.

Figure 5 is a top plan view of the apparatus illustrated in Fig. 3.

Figure 6 is a vertical sectional view taken substantially in the plane indicated by line VI—VI of Fig. 3.

Figure 7 is an enlarged fragmental sectional view of another form of abutment means than that illustrated in Fig. 4.

The drawings will now be explained.

The apparatus chosen to exemplify the present invention is illustrated as including a base member A which comprises a bottom flange 1, upstanding wall 2 and a platform 3, which member A may be formed as a casting, or in any other desired fashion.

Bolted to the platform 3 of the base member A is a standard 4 having integrally formed as a part thereof a head 5 which is spaced from the standard to form a gap 6 of substantial extent. The head 5 is integrally connected to the standard 4 by means of a part 7.

The gap 6 is of sufficient expanse to receive in it the skirt end of a piston, and in addition a portion of the abutment means of the present invention.

Figure 3 illustrates a piston B supported in upside down position on a plate 8 which plate is carried by a vertically movable post 9 suitably supported in a guideway 10 of the base member A.

Base member A is shown as having an integral bearing member 11 through which extends a spindle 12. Attached to the end of the spindle 12 adjacent the bearing 10 is a cam 13. The cam 13 is illustrated as of circular outline and is mounted in eccentric relationship on the spindle 12. The cam is provided with a hub 14 which receives the adjacent end of the spindle 12 and to which spindle 12 is connected by means of a pin 15, or other suitable and convenient fastening.

Formed as an integral part of the post 9 is an outstanding lug 16 positioned to bear against the surface of the cam 13 so that as the cam is rotated by means of the spindle 12 the plate 8 is adjusted vertically to position the piston B in desired relationship for expanding purposes.

In order to operate the spindle 12 to adjust the height of the plate 8 and its supported piston B, a wheel 17 is keyed to the outer end of the spindle 12 and maintained on the spindle by means of a wing nut 18.

The bearing 10, for the post 9, is slotted as at 18 for the lug 16. In like manner the platform 3 of the base member A may be slotted at 19 for like purpose.

The head 5 is vertically bored to receive a shaft 20 which, has a crank 21 connected to its upper end, which crank in turn is provided with a handle 22 for rotating the shaft 20.

Attached to the lower end of the shaft 20 is a roller C.

The roller C is illustrated as including axially spaced series of indenting projections 23 extending outwardly from the body 24 of the roller. The projections 23 are preferably pyramidal in shape to form a plurality of pyramidal indentations in the inner surface of a piston skirt, as will be more fully explained.

While the roller C is provided with two series of indentation projections 23, it is to be understood

that but a single series might be employed or more than two series, if conditions warranted.

The standard 4 is formed with a recess 25, preferably rectangular in cross section extending inwardly from the face of the standard adjacent the head 5. Between the recess 25 and the surface of the standard on the opposite side thereof from the gap 6, the standard is bored and threaded as at 26 to receive a screw 27.

A block 28 is slidable within the recess 25. The end of the block adjacent the head 5, herein termed the outer end, carries a roller 29 mounted to rotate on a vertical axis and so related to the indenting roller C as to be in alignment with the indenting roller C along the line from the axis of the piston B radially through the center line of the shaft 20, in horizontal direction. The purpose of the roller 29 is to buck a portion of the outer surface of a piston while the inner surface of that portion is being indented by the roller C.

The inner end of the block 28 is provided with a recess 30 to receive a head 31 on the screw 27, to move the block inwardly and outwardly as the screw is rotated. In this manner the block 28 may be moved inwardly and outwardly thereby adjusting the roller 29 as expediency may require.

To the outer end of the screw 27 is secured a wheel 32 having its periphery provided with a series of graduations 33. Secured to the standard 4 above the wheel 32 is a finger 34 which serves the purpose of a gauge marker for the wheel 32.

The piston illustrated in Fig. 1 shows a known form of piston, in which the skirt has collapsed so that the outer diameter of the lower portion of the skirt is less than it was when new and less than the diameter of the cylinder, indicated by the lines 35.

To expand a piston in the condition of that illustrated in Fig. 1, with the apparatus of the present invention, the table 8 would be lowered and the block 28 retracted, and the piston put on the plate 8 in upside down position as shown at B in Fig. 3. This particular type of piston is of the strut type, that is, a piston having struts 36 cast inwardly of the skirt for reinforcing portions of the skirt below the wrist pin bosses 37.

The wheel 17 would be manipulated to elevate the plate 8 and piston B so that one of the struts 36 aligns with the series of indentation projections 33 of the indenting roller C, whereupon the wheel 32 would be actuated to move the roller 29 against the exterior surface of the piston so as to press the inner surface of the skirt onto the indentation projections 23 of the roller C. Pressure of the roller 29 against the piston is such that as the indenting roller C is rotated by means of the crank 21 the projections 23 thereon will form indentations 38 in the inner surface of the struts 36, or in the inner surface of the skirt of the piston, if the piston is of the strutless type.

Continued rotation of the crank 21 causes rotation of the piston B about its axis and the action of the indenting roller is such as to displace metal outwardly radially from the inner surface of the skirt and thereby expand the skirt to bring its outer surface to its true diameter.

In expanding pistons of the strut type, it is preferable to form the indentations in the inner surface of the struts only. If however, portions of the skirt, between the struts are out of round, then suitable indentations could be made in the inner surfaces of the skirt between the struts to thus bring the outer diameter of the skirt portion to its true and original size.

During expanding of a skirt, breakage is prevented as the pressure of the roller 29 against the skirt may be varied in the event high spots are encountered in the metal of the piston, while the skirt is being expanded. The amount of pressure applied may be controlled in accordance with the feel of the thickness of the metal as the piston is being expanded, as an operator very quickly becomes familiar with the feel of the apparatus in expanding pistons of various kinds and shapes.

Referring to Fig. 7, it will be observed that in this form of the invention, the block 28 is equipped to carry two fulcrum rollers 39, arranged to rotate on vertical axes, and which are disposed in closely adjacent relationship. With a fulcrum of this character, the indenting roller C acts against the inner surface of the piston B in a radial line which passes between the rollers 39.

The apparatus of the present invention is one that may be constructed to sell at a relatively low price, thus making it available for small shops.

The principles of the present invention, as before stated, contemplate the expanding of skirts of pistons by rolling indentations in the inner surface of the piston skirts, displacing metal of the skirts, forcing it outwardly thus causing the skirt to expand outwardly, with the result that a badly worn or badly collapsed skirt may be readily expanded to its original external diameter very quickly in relatively short periods of time, say periods of very few minutes.

The graduations 33 on the wheel 32, when read in connection with the finger 34 prove useful when truing pistons of the same general type, so that the operator may very quickly reach the necessary application of pressure of the fulcrum against the exterior of the piston, to expedite the expanding action.

On the standard 4 may be formed graduations 40 which may be useful in vertically adjusting a piston B to bring the indenting rollers C against other portions of the interior of the skirt, than adjacent its free end. It sometimes so happens that to properly true a piston skirt, indentations have to be made in zones other than immediately adjacent the free end of the skirt and in this regard the scale 40 proves advantageous.

The indenting roller C may be made as one unit with one, two, or more series of indentation forming projections 23 thereon, or may be made as separate units, every unit with one series of indentations, in which event two such units would be applied to the shaft 20 if two rows of indentations were to be formed in the inner surface of a piston skirt, to properly true the skirt.

Fig. 2 illustrates a piston, of the type illustrated in Fig. 1, as the same appears after having been trued or expanded in accordance with the present invention. It will be noted that in Fig. 2, the lower end of the skirt is in contact with the wall 35 of the cylinder.

The invention has been described herein more or less precisely as to details, yet it is to be understood that the invention is not to be limited thereby, as changes may be made in the arrangement and proportion of parts and equivalents may be substituted without departing from the spirit and scope of the invention.

The invention is claimed as follows:

1. In an apparatus of the class described, an indenting roller rotatable about a fixed vertical

axis and disposed to contact the inner surface of a pistons skirt, means movable against the outer surface of a piston at right-angles to the axis of rotation of said indenting roller to press a portion of the skirt against said roller so that rotation of said roller rotates said piston about its axis and forms indentations in the inner surfaces of skirts to true the skirt, hand operated means for controlling the pressure of said first means against a piston as it is trued to prevent breakage of the piston and to allow for any unevenness occasioned by high spots, means for rotating said roller, and means supporting a piston to present its skirt in upside down position to be trued, said supporting means being adjustable in the direction of piston axis to subject any desired portion of the piston skirt to action by the said roller.

2. A piston truing device comprising a frame or support, a standard on said frame comprising a structure U-shaped in side elevation with legs of unequal length mounted on said frame in inverted position with the longer leg secured to the frame and the shorter leg vertically spaced from it, a vertically adjustable piston support in said frame adapted to receive a piston with its skirt uppermost and to present a portion of the skirt between the legs of said standard, a slide horizontally movable in the longer leg and carrying roller means disposed in the space between said legs to constitute a movable abutment or fulcrum for the outer surface of a piston skirt, indenting roller means carried by the shorter leg and rotatable on a vertical axis and adapted to act against the inner surface of a skirt in opposition to said fulcrum, and means for rotating said indenting roller means to rotate the piston about its axis and to form indentations in the inner surface of the skirt to expand the skirt.

3. A piston truing device comprising a frame or support, a standard on said frame comprising two vertically extending horizontally spaced jaws fixedly secured together in laterally spaced relation, a vertical drive shaft journalled in one jaw and carrying an indenting roller at its lower end, means connected with its upper end for rotating said shaft, a slide movable horizontally in the other jaw toward and away from the indenting roller and carrying abutment roller means mounted to rotate on vertical axis, and means for presenting a piston in upside down position with its skirt uppermost and betweeh said abutment and indenting roller.

4. A piston truing device comprising a frame or support, a standard on said frame comprising two vertically extending horizontally spaced jaws fixedly secured together in laterally spaced relation, a vertical drive shaft journalled in one jaw and carrying an indenting roller at its lower end for rotating said shaft connected with its upper end, a slide movable horizontally in the other jaw toward and away from the indenting roller and carrying abutment roller means mounted to rotate on vertical axis, and means for presenting a piston in upside down position with its skirt uppermost and between said abutment and indenting roller, said supporting means being vertically adjustable to subject different portions of the piston skirt to action by said indenting roller.

5. A piston truing device comprising a frame or support, a standard on said frame comprising two vertically extending horizontally spaced jaws fixedly secured together in laterally spaced relation, a drive shaft carrying an indenting roller supported in one jaw, abutment means supported in the other jaw and movable toward and away from said indenting roller, means for presenting a piston in upside down position with its skirt uppermost and between said abutment and indenting roller, said supporting means comprising a plate, a vertically movable post supporting said plate, said post having a lateral projection, and cam means mounted in said frame or support and working against said projection to raise and lower said post and plate to thereby adjust said plate to present different portions of the piston skirt to said indenting roller.

6. A piston truing device comprising a frame or support, a standard on said frame comprising two vertically extending horizontally spaced jaws fixedly secured together in laterally spaced relation, a drive shaft journalled in one of said jaws and carrying an indenting roller, a slide horizontally movable in the other jaw toward and away from the indenting roller and carrying abutment roller means mounted to rotate on vertical axis, means for presenting a piston in upside down position with its skirt uppermost and between said abutment and said indenting roller, said supporting means comprising a vertically movable post, a plate carried at the upper end of said post for supporting a piston, a lug on said post, and means arranged in said frame and engaging said lug for vertically adjusting said post.

ALBERT P. FALL.