May 26, 1931. R. BOWN 1,806,666

RADIO BROADCASTING SYSTEM

Filed Dec. 11, 1928

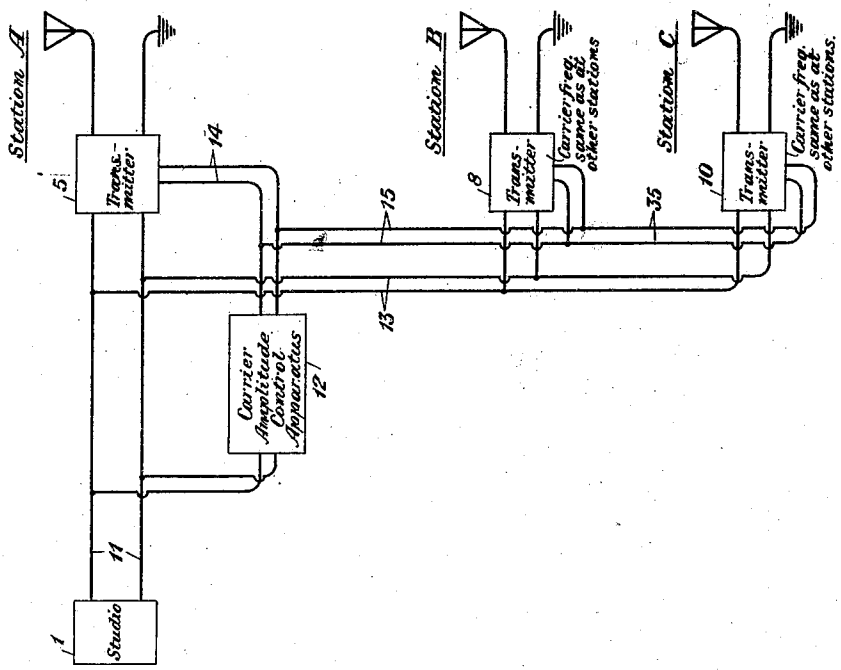

Fig. 2

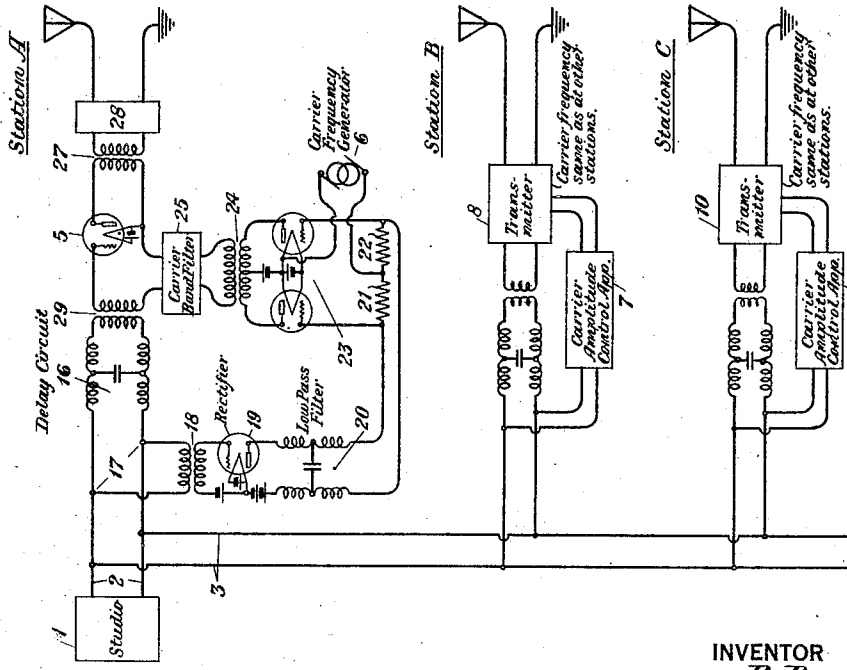

Fig. 1

INVENTOR
R. Bown
BY
ATTORNEY

Patented May 26, 1931

1,806,666

UNITED STATES PATENT OFFICE

RALPH BOWN, OF MAPLEWOOD, NEW JERSEY, ASSIGNOR TO AMERICAN TELEPHONE AND TELEGRAPH COMPANY, A CORPORATION OF NEW YORK

RADIO BROADCASTING SYSTEM

Application filed December 11, 1928. Serial No. 325,151.

This invention relates to radio broadcasting systems, and more particularly to a method of and means for reducing interference between broadcasting stations transmitting simultaneously a common program and all occupying the same carrier frequency channel assignment.

In order to mitigate congestion in the broadcasting field, it has at times been considered desirable to put on one carrier frequency channel all the stations in a chain which were simultaneously broadcasting the same program, thereby freeing the channels which these stations would normally occupy. One of the serious limitations in the way of doing this is the necessity that to avoid beat note interference between the carriers of the various stations, they must be very carefully synchronized in frequency. One of the advantages of the present invention consists in the fact that it will tend to materially reduce interference in systems of this type without there being necessity for synchronization of the carrier frequencies.

The arrangements of the present invention propose utilizing a system combining a plurality of radio volume compression stations operating to broadcast a common program on a common frequency. The method of operating these volume compression stations involves changing their carriers in accordance with the changing volume of the common program being broadcast. The volume compression type of system or the carrier amplitude control type of system is well known in the art. An illustration of one form thereof may be found in U. S. Patent No. 1,681,972, issued to O. B. Blackwell, et al., on August 28, 1928.

The use of the volume compression type of system, in accordance with the arrangements of the invention, will afford certain interference reducing properties. The interference reducing property resides in the fact that the carrier amplitude in a volume compression station is made proportional to the side band amplitude so that a substantially constant percentage modulation is maintained. Since beat note interference results from the interaction of the carrier of the station being received and the carrier of the station which is looked upon as interfering, the loudness of the beat note is proportional to the product of the amplitude of these two carriers. The fact that the carrier amplitude is reduced during the weaker parts of the program as transmitted from a volume compression station causes the beat note amplitude between it and any other station to be decreased during the weak parts of the program and the interfering effect thereby materially reduced. It is evident that if the two stations under consideration were both transmitting the same program and were both volume compression stations, both carriers would be reduced in amplitude during the weak parts of the program and the interference between them would be doubly decreased. Other features and objects of the invention will appear more fully from the detailed description thereof hereinafter given.

The invention may be more fully understood from the following description, together with the accompanying drawings, in the Figures 1 and 2 of which the invention is illustrated. In Fig. 1 is a circuit diagram showing a preferred form of the invention. In Fig. 2 is shown a modification thereof. Like reference characters have been utilized to denote like parts in both of the figures.

In Fig. 1 is shown a radio broadcasting system comprising a plurality of transmitting stations, such as stations A, B and C. These stations will all be simultaneously broadcasting a common program originating from the studio 1. In order to relieve congestion in the broadcasting field, all of these stations will be operating on the same carrier frequency channel. Station A will be connected to the studio by circuit 2 and will be arranged to operate as a volume compression system. Circuit 2 is connected with the modulator 5 by the transformer 29, the connection including a network 16 which may be designated a delay circuit, the function of which is to retard the signal from the studio which is about to be impressed upon the modulator 5 and to prevent its effect thereon until certain other operations have

taken place. Bridged across circuit 2 at the points 17 is a carrier amplitude control circuit comprising a rectifier 19, a low-pass filter 20, and a push-pull modulator 23 having a carrier frequency generator which is connected with the input side thereof. This carrier amplitude control circuit is connected with circuit 2 by means of the transformer 18, and the output side of this control circuit is connected with the input circuit of the modulator 5 by the transformer 24, the connection also including a filter or tuned circuit 25 which transmits substantially only the carrier frequency generated by the source 6. The output side of the modulator 5 is connected by the transformer 27 with a carrier circuit which may contain an amplifier and filter, such as 28, which may be connected to an antenna for broadcasting.

The manner in which the before-described circuit functions to transmit speech, or other signals, is a follows: A portion of the speech energy from the studio 1 is impressed at the points 17 across the primary of transformer 18. The tube 19, which is arranged to function as a rectifier, rectifies the signal wave, and the resultant rectified current is smoothed out by means of the network 20 constituting a low-pass filter so that only its major variations are transmitted. This rectified current, as smoothed out by the low-pass filter 20, flows through the resistances 21 and 22 in series across the grids of the push-pull modulator 23. The modulator grid is accordingly unbalanced so that a wave of carrier frequency from the source 6 will be impressed upon the secondary winding of the transformer 24, the amplitude of which will depend upon the degree of unbalance of the said modulator. This in turn depends upon the magnitude of the rectified current flowing through the resistances 21 and 22 in series, which establishes a potential difference across them with variations in the magnitude of the signal current. The relation between the amplitude of the carrier and that of the signal input may or may not be arranged to be exactly linear, as desired. The filter 25 is designed to pass only slow variations of the carrier frequency, thus eliminating any residual side band components that might be produced by signal variations in the rectified signal frequency not eliminated by low-pass filter 20. This carrier frequency will be modulated by the signal frequency impressed by the transformer 29 upon the modulator 5, and the resultant side bands and the carrier frequency will be impressed by the transformer 27 upon the antenna circuit. A filter 28 may be included to eliminate one of the side bands for transmission, and an amplifier may also be inserted in the antenna circuit. The delay circuit 16, by retarding the speech signal from the studio, enables the change in the amplitude of the carrier current to be effected before the signal reaches the input of the modulator 5. It will accordingly be seen that as the speech, or other signal, diminishes in intensity, the amplitude of the carrier is likewise reduced, and, by proper adjustment of the rectifier, entire suppression of the carrier in so far as it affects the input of the modulator 5 may be effected when there is a pause or cessation of the signal from the studio.

Other stations, such as B and C, may be connected by a common circuit 3 to the circuit 2 and thence to the studio. Station B will include transmitter apparatus 8 and a carrier amplitude control circuit 7. Station C will include transmitter apparatus 10 and a carrier amplitude control circuit 9. In detail, the arrangements at stations B and C will be substantially identical with those heretofore described with respect to station A, and hence the arrangements of stations B and C have been shown in schematic form only. It is pointed out that the carrier frequency generated at stations B and C will be the same as the carrier frequency produced by the generator 6 at station A.

As has been pointed out previously, beat note interference results from the interaction of the carrier of the station being received and the carrier of the station which is looked upon as interfering. Accordingly, the loudness of the beat note is proportional to the product of the amplitude of these two carriers. The fact that the carrier amplitude is reduced during the weaker parts of the program, as transmitted from a volume compression station, causes the beat note amplitude between it and any other station to be decreased during the weak parts of the program, and the interfering effect is thereby materially reduced. When all of the stations under consideration are transmitting the same program, and are of the volume compression type of station, it is evident that the carriers would all be reduced in amplitude during the weak parts of the program. and the interference between any two thereof would be further decreased.

A modification of the system shown in Fig. 1 is illustrated in Fig. 2. Similar reference characters have been utilized to denote like parts in both figures. Stations A, B and C are shown having transmitter apparatus, such as 5, 8 and 10. These transmitters may be connected to studio 1 by the circuits 11 and 13. At a station, such as A, there will be provided the carrier amplitude control apparatus 12. By means of circuits 14, 15 and 35, this carrier amplitude control apparatus may be made common to the transmitters of all of the stations. The apparatus will function in a manner substantially similar to that heretofore described.

While the invention has been disclosed as embodied in certain specific arrangements

which are deemed desirable, it is understood that it is capable of embodiment in many other widely varied forms. It is particularly pointed out that apparatus other than the type shown may be utilized for controlling the carrier amplitudes. Accordingly, the arrangements of the invention may be embodied in other forms without departing from the spirit of the invention, as defined by the appended claims.

What is claimed is:

1. In a radio broadcasting system the method of simultaneously transmitting from a plurality of stations each operating on substantially the same carrier frequency a set of signals from a single source, which comprises simultaneously causing the amplitudes of the unmodulated carrier frequency components transmitted from a plurality of said stations to vary with the amplitude of said set of signals, whereby the detected beat note resulting from two slightly different carriers will be the product of two carriers each of abnormally small amplitude when the amplitude of the desired signal is small.

2. In a radio broadcasting system the method of signaling which consists in generating voice frequency signals at one source, simultaneously superimposing said voice frequency signals on a plurality of carrier channels of substantially the same frequency, and simultaneously controlling the amplitudes of the resultant unmodulated carrier frequency components by the amplitude of said voice frequency signals, whereby the detected beat note resulting from two slightly different carriers will be the product of two carriers each of abnormally small amplitude when the amplitude of the desired signal is small.

3. In a signaling system the combination with a single source of low frequency signals, of a plurality of sources of substantially the same carrier frequency, means for simultaneously controlling the amplitudes of said carrier frequencies in accordance with the envelope of the low frequency signals, means for simultaneously modulating the controlled carrier frequencies by the low frequency signals for broadcasting purposes, means to receive the modulated carriers to reproduce said low frequency signals, said means producing a detected beat note from two slightly different carriers which is the product of two abnormally small carrier components when the amplitude of the desired signal is small.

4. A source of low frequency signals, a plurality of radio transmitters each operating on substantially the same carrier frequency, circuits for connecting each of said radio transmitters to said source so that the corresponding carriers will be modulated by said low frequency signals, means associated with said circuits for simultaneously controlling the amplitudes of the unmodulated carrier frequency components as transmitted from said transmitters in accordance with the amplitude of said low frequency signals, means to receive the modulated carriers to reproduce said low frequency signals, said means producing a detected beat note from two slightly different carriers which is the product of two abnormally small carrier components when the amplitude of the desired signal is small.

In testimony whereof, I have signed my name to this specification this 7th day of December, 1928.

RALPH BOWN.