US00D355896S

United States Patent [19]

Gaultier

[11] Patent Number: Des. 355,896

[45] Date of Patent: ** Feb. 28, 1995

[54] **DIALOG TERMINAL**

[75] Inventor: **Philippe Gaultier,** Le Chesnay, France

[73] Assignee: **Sextant Avionique,** Meudon La Foret, France

[**] Term: **14 Years**

[21] Appl. No.: **1,151**

[22] Filed: **Oct. 23, 1992**

[30] **Foreign Application Priority Data**

Apr. 23, 1992 [FR] France 92 2597

[52] **U.S. Cl.** **D14/100;** D19/52; D19/60

[58] **Field of Search** D19/59-64; 434/322, 323, 324, 327, 169, 159, 317, 343, 339; D21/13, 57, 48; D14/100

[56] **References Cited**

U.S. PATENT DOCUMENTS

D. 194,537	2/1963	Teeter	D19/59
D. 270,061	8/1983	Ackeret	D14/100 X
D. 321,174	10/1991	Tsuchiya	D14/100
D. 327,498	6/1992	Watson et al.	D19/59 X
D. 340,701	10/1993	Takeuchi	D14/100
D. 341,823	11/1993	Sakai	D14/100

Primary Examiner—Wallace R. Burke
Assistant Examiner—Pamela Burgess
Attorney, Agent, or Firm—Browdy and Neimark

[57] **CLAIM**

The ornamental design for a dialog terminal, as shown and described.

DESCRIPTION

FIG. **1** is a top plan view of the dialog terminal in accordance with the present design;
FIG. **2** is a top perspective view thereof;
FIG. **3** is a front elevation thereof;
FIG. **4** is a backside elevation view thereof;
FIG. **5** is a bottom plan view thereof;
FIG. **6** is a bottom perspective view thereof;
FIG. **7** is a left side view thereof; and,
FIG. **8** is a right side view thereof.

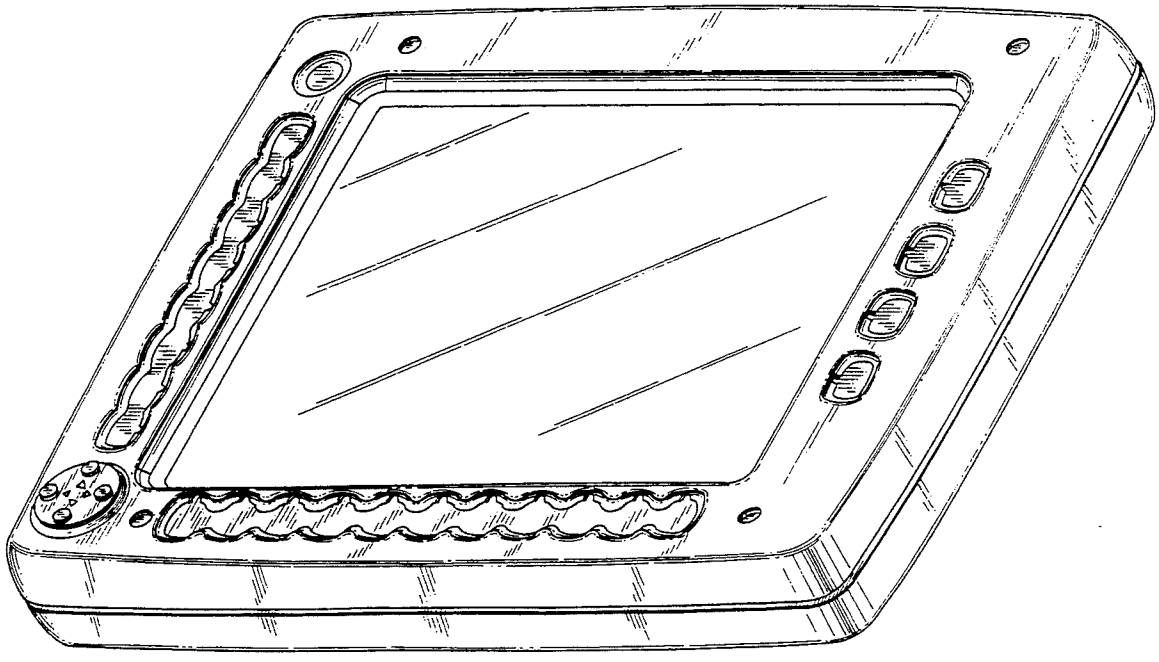

FIG. 1

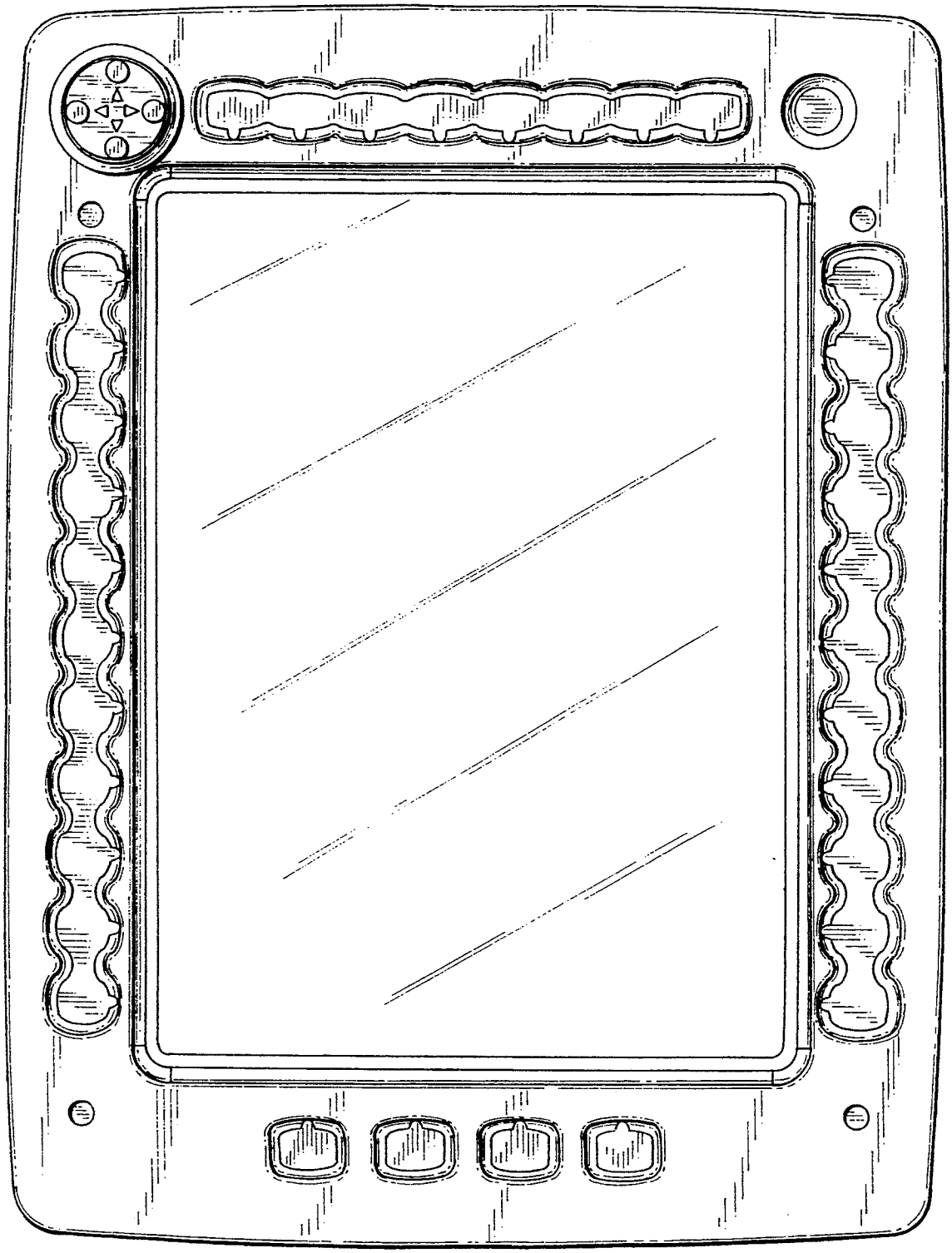

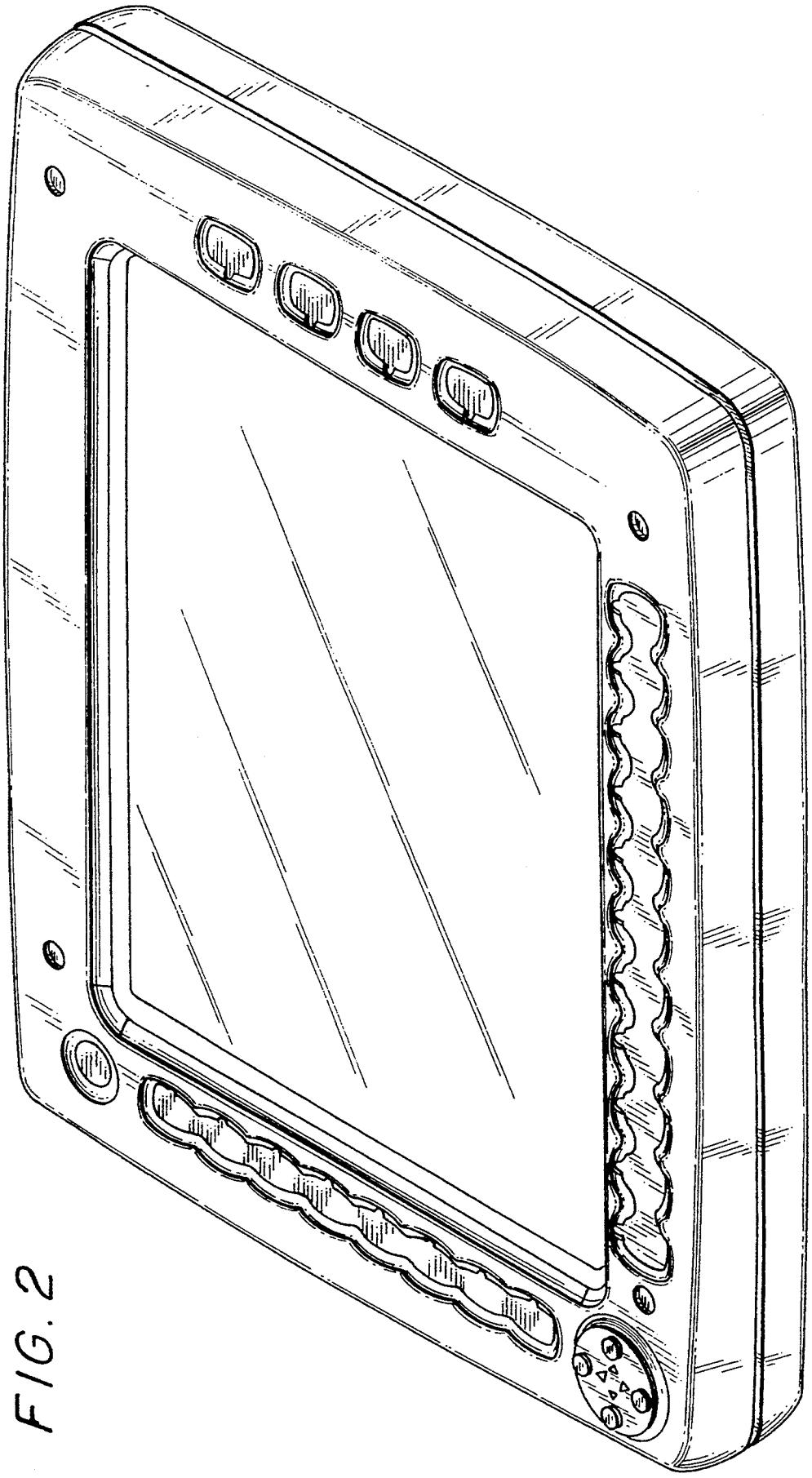

FIG. 2

FIG. 3

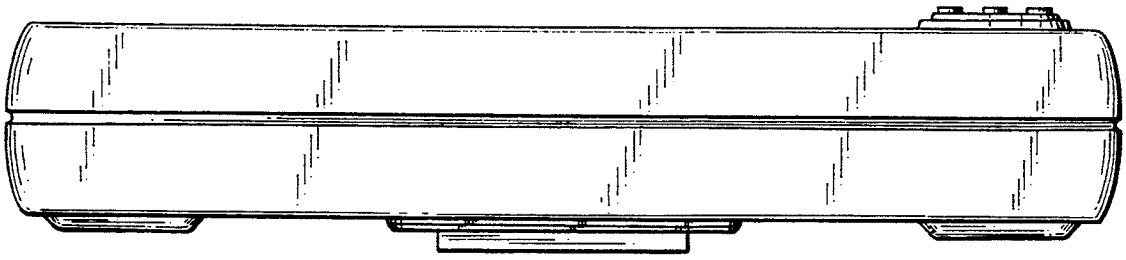

FIG. 4

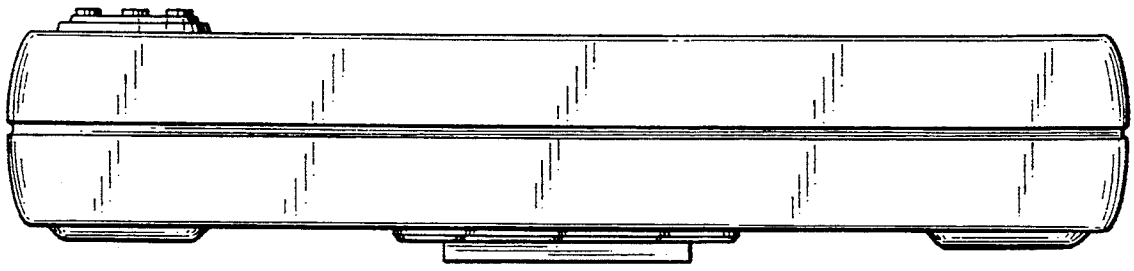

FIG. 5

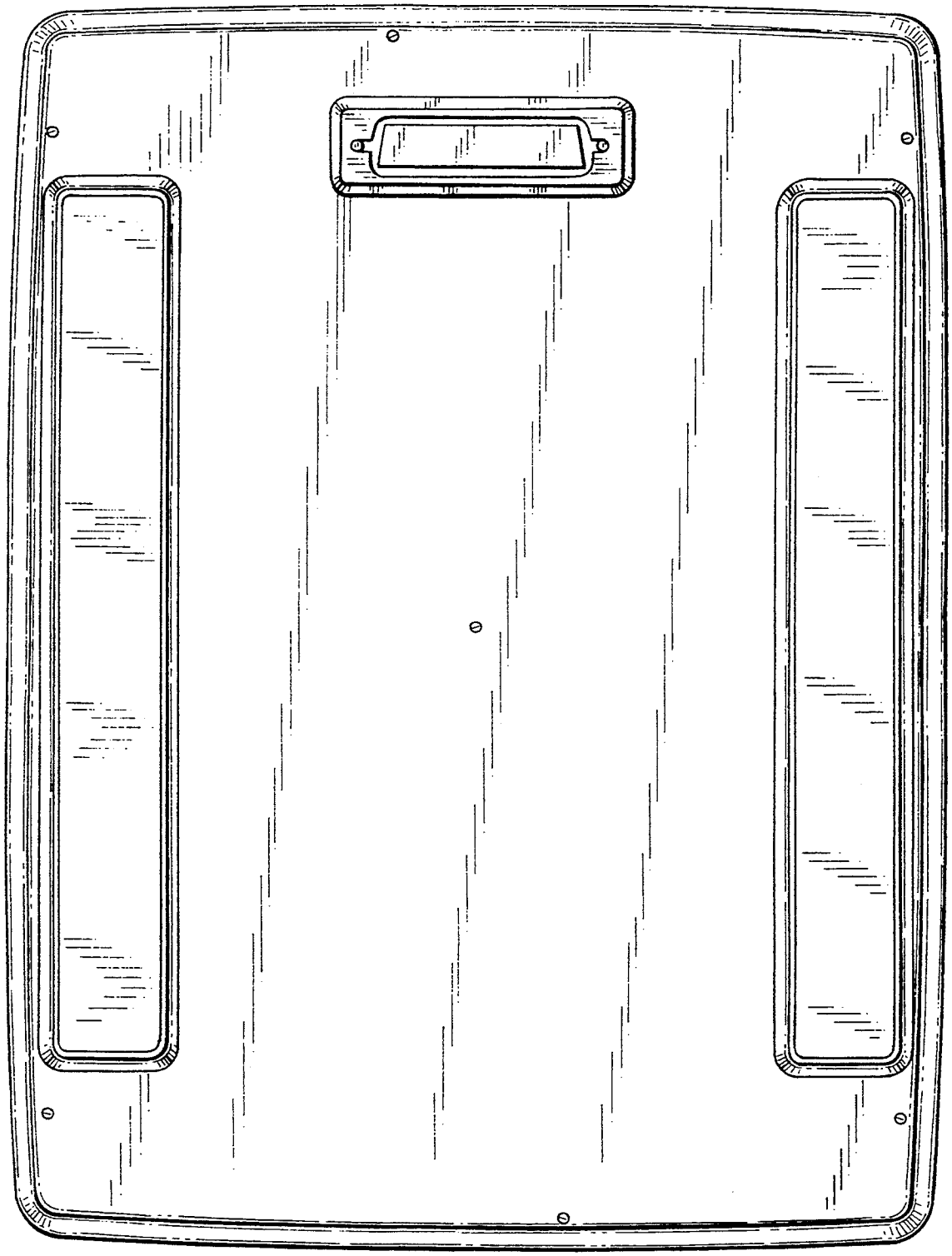

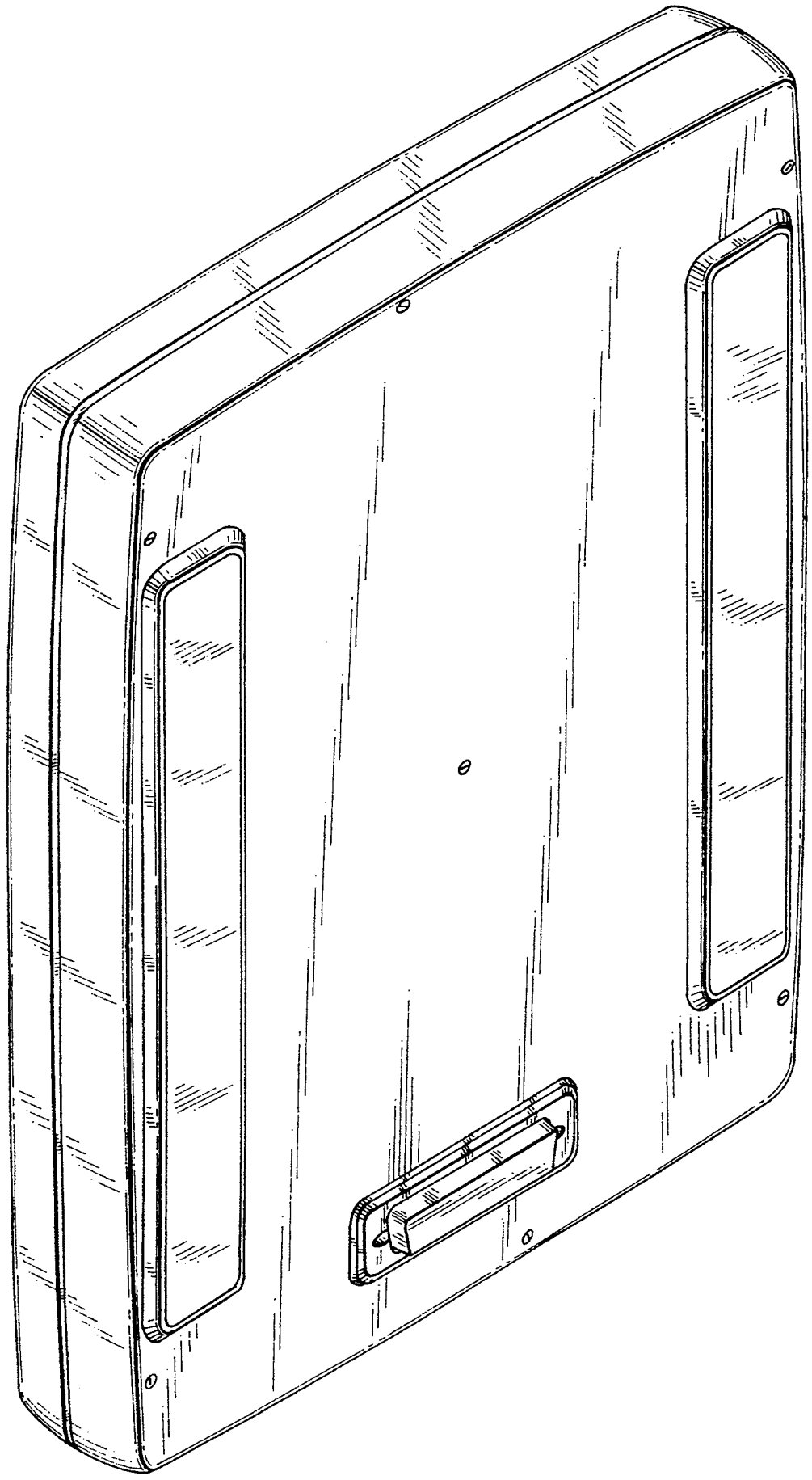

FIG. 6

FIG. 7

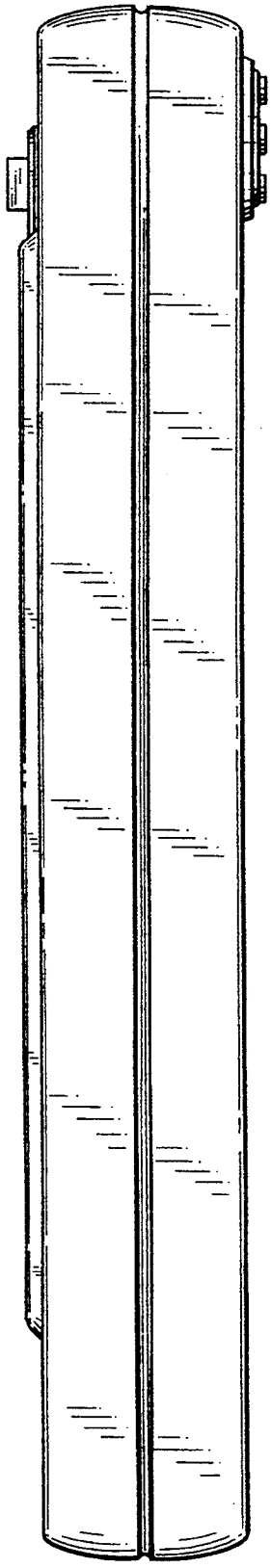

FIG. 8

