W. T. CLARK.

SHOCK ABSORBER FOR GEARING.

APPLICATION FILED APR. 3, 1912.

1,037,205.

Patented Sept. 3, 1912.

2 SHEETS—SHEET 1.

Fig. 1,

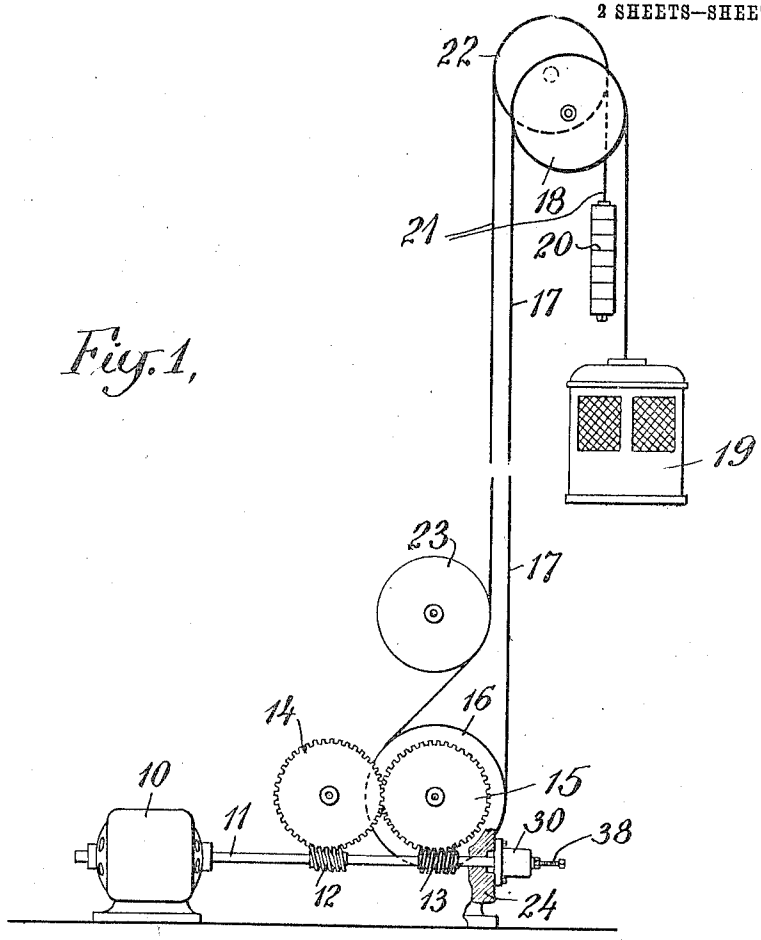

Fig. 2,

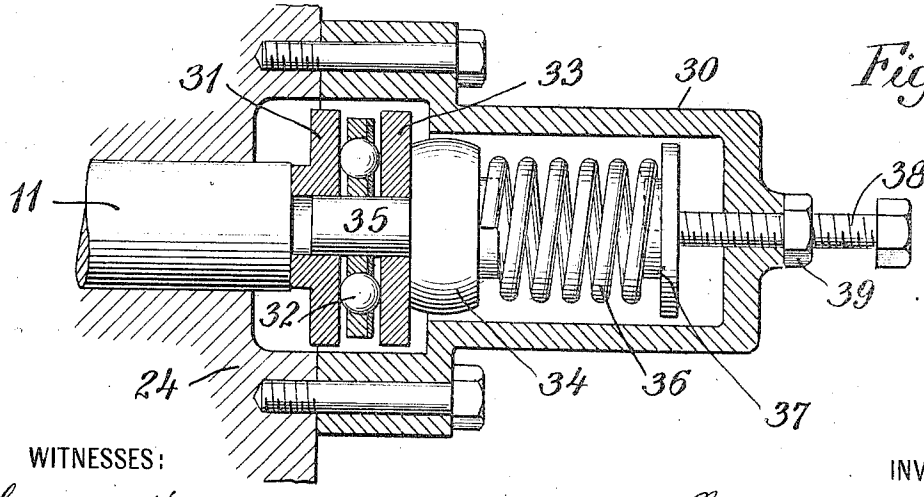

WITNESSES:

Leonard Hauerstein

F. Graves.

INVENTOR

William T. Clark

BY

E. W. Marshall

ATTORNEY

W. T. CLARK.

SHOCK ABSORBER FOR GEARING.

APPLICATION FILED APR. 3, 1912.

1,037,205.

Patented Sept. 3, 1912.

2 SHEETS—SHEET 2.

Fig. 3,

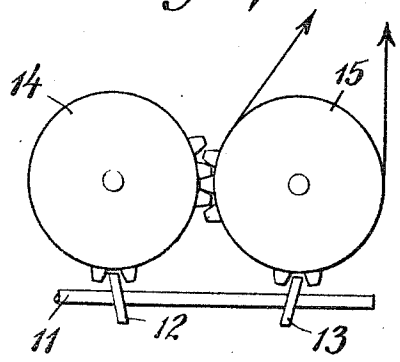

Fig. 4,

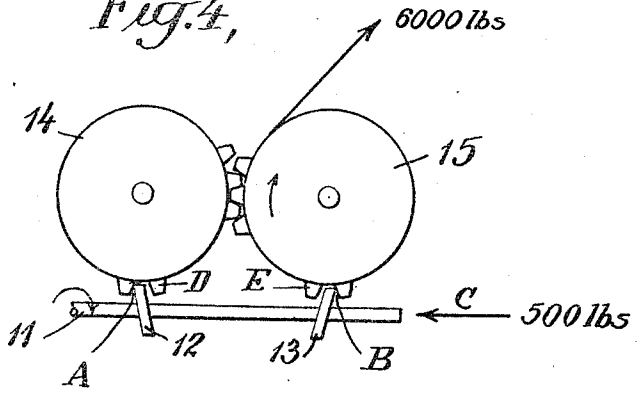

Fig. 5,

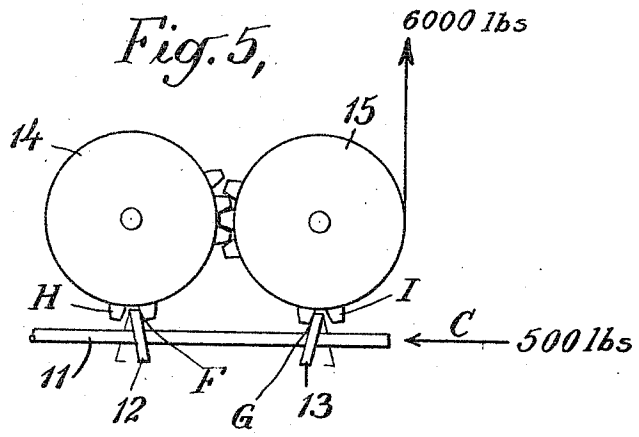

WITNESSES:

Leonard Hanerstein

F. Graves

INVENTOR

William T. Clark

BY

E. W. Marshall

ATTORNEY

UNITED STATES PATENT OFFICE.

WILLIAM T. CLARK, OF YONKERS, NEW YORK.

SHOCK-ABSORBER FOR GEARING.

1,037,205. Specification of Letters Patent. Patented Sept. 3, 1912.

Application filed April 3, 1912. Serial No. 688,209.

To all whom it may concern:

Be it known that I, WILLIAM T. CLARK, a citizen of the United States of America, and a resident of Yonkers, county of Westchester, and State of New York, have invented certain new and useful Improvements in Shock-Absorbers for Gearing, of which the following is a specification, reference being had to the accompanying drawings, forming a part thereof.

My invention relates to a shock absorber for gearing and its object is to provide a device especially applicable to that type of gears known as "tandem-gears" in common use with electric elevators, which device is simple in construction and has the effect of taking up any jar or shock which may be present in such gears. This and other objects of the invention will appear in the following specification in which I will describe an embodiment and at the end of which I will set forth its novel features in appended claims.

Referring to the drawings; Figure 1 is a diagrammatic view of certain parts of a common form of elevator employing tandem gearing, and shows my invention applied thereto. Fig. 2 is a sectional side elevation of a device embodying my invention. Figs. 3, 4 and 5 are diagrammatic views of certain parts of the gearing to which my invention is applied, and these figures are shown for the purpose of illustrating the operation of the device.

Like characters of reference designate corresponding parts in all of the figures.

10 designates a reversible motor which is connected to rotate a shaft 11 in both directions. Two oppositely pitched worms 12 and 13 are upon this shaft and these worms mesh respectively with gears 14 and 15 which are also in mesh with each other or are otherwise connected to run together. On the shaft of gear 15 is mounted a rope drum 16. From one side of this drum, a cable 17 runs up over a sheave 18 at the top of the hatchway, and to the car 19.

20 is a "back drum" counterweight, that is it is connected with the back of the hoisting drum 16 by a rope or cable 21 which runs over a supporting sheave 22 and a guiding sheave 23, to the drum. If, as is sometimes the case, the hoisting mechanism is at the top of the shaft, the sheaves 18, 22 and 23 may be omitted.

The foregoing parts have been described but briefly for they do not of themselves form any part of the present invention.

As is well known, gearing of this and similar character requires no end thrust bearings for the intermeshing gears balance each other so far as end thrust is concerned. But it has been found that if there is any play between the teeth of the gears and worms there is not only a disagreeable jar felt in the car, especially upon reversing but that the severe strains put upon the gears under present elevator practice due to sudden starting and stopping of the car increase this defect rapidly. I have found that the blow between the teeth may be cushioned and the resulting shock absorbed or eliminated by the use of some such simple device as that which I am about to describe herein. As will appear more fully, an unusual smoothness of operation is attained, and the wear on the gearing itself is greatly reduced as well as cable strains in starting and stopping cushioned.

Briefly my novel shock absorber comprises a pressure device with means for applying a resilient pressure longitudinally upon one end or the other of shaft 11.

By referring to Fig. 2, I will describe the construction of a simple form of my device.

24 designates the casing of the hoisting mechanism at the end of shaft 11 in which casing the shaft is supported. This device comprises a housing 30 which is adapted to be bolted onto the end of casing 24 in place of the cap which is usually placed over the end of the shaft-hole.

31 is a hardened collar one side of which abuts against the end of shaft 11 and the other side of which forms a bearing for a set of balls 32 held together in a ball cage of usual construction. These balls also bear against another hardened collar 33.

34 is a pressure member having a central lug 35 which passes through holes in collars 33 and 31 to keep them in alinement.

36 is a compression spring which abuts against this member and is held in position by a centrally disposed lug. At the other end of this spring is a collar 37 which is also provided with a centralizing lug for the spring. A regulating bolt 38 is threaded through the end of casing 30 and held in position by a lock nut 39.

It may be seen that this simple device may be readily placed upon elevator mechanisms even when they are already installed and that it may be made to exert an end pressure upon shaft 11 varying in amount in accordance with the strength of the spring 36, and the adjustment of bolt 38.

I will describe the operation of my invention by making reference to the diagrams, Figs. 3, 4 and 5.

It will be understood that the counterweighth 20 is heavier than the car 19 so that when there is but a light load in the car the pull on rope 21 will be greater than the pull on rope 17. When the car is fully loaded, this condition will be reversed. Let us assume first that the load on the car just balances weight 20. The weights then will have no tendency to rotate the drum 16 and the gears 14 and 15. Let us further assume that there is some play between the worms 12 and 13 and gears 14, 15 respectively. Without my device applied the shaft 11 is free to "float," that is move back and forth longitudinally. And with the conditions assumed and illustrated diagrammatically in Fig. 3, the shaft may assume a position with the teeth of the worms midway between the teeth of the gear. In starting shaft 11 in either direction, there will be a jar or shock when the teeth of the worms strike against the teeth of the gears. This difficulty will be greatly aggravated if the car and counterweight loads do not balance and the shaft 11 is rotated in a direction opposite to that of greatest pressure on the gearing.

Referring now to Fig. 4, it will be assumed for purposes of illustration, that there is 6000 pounds more strain put upon gears 14 and 15 by the weight than by the car. The condition then will be that this 6000 pounds will be taken up equally at the points A and B. But according to my invention I add at the end of shaft 11 a resilient end pressure in the direction of arrow C, say of 500 pounds. This will increase the pressure at A to 3500 pounds and decrease the pressure at B to 2500 pounds. Under these conditions it may be noted that the maximum work of driving the elevator in either direction comes upon worm 12 and gear 14. Now if the driving pressure is reversed, and the worm revolved, the tendency is for the worm-tooth to advance and strike tooth D of gear 14. But with resilient pressure applied at the end of shaft 11, the latter is caused to move longitudinally maintaining the contact between the worm and gear at A. It is in this manner that the jar of starting the elevator with gears of this general type is cushioned and overcome.

Now considering Fig. 5 and assuming that the pull of the car on gear 15 is 6000 pounds greater than that of the counterweight. This pull will be divided between the points F and G. But with 500 pounds resilient longitudinal pressure in the direction of the arrow C, the pressure will be unequally divided and there will be 2500 pounds pressure at F and 3500 pounds pressure at G. Running the elevator under these conditions will make worm 13 and gear 15 do the greater part of the work. When the driving pressure is reversed and the worm revolved the resilient end pressure at C will shift shaft 11 to prevent the back of the worm tooth of worm 13 striking against tooth I of gear 15.

In the usual constructions, the worms 12 and 13 are made of steel and the gears 14 and 15 of bronze. The latter are capable of long wear but are peculiarly susceptible to hammer blows such as they get as soon as there is a slight amount of back-lash between them and the worms. With my invention applied, the shocks or blows are eliminated so that the gears wear much longer. It is only necessary that sufficient pressure be applied at C to move the shaft longitudinally with an acceleration equal to the difference of accelerations of the gear teeth and of the worm teeth in the same direction, that is, the annular acceleration of the worm times the lead of the screw. The figures used in explaining the operation are arbitrarily selected for illustrative purposes only.

Not only does this invention decrease the wear of the gears, but it may now be seen that the operation on the car will be smoother when stopping and starting due to the fact that the worms and gears are held in contact and that sudden strains on the ropes will be greatly relieved.

I have illustrated one simple device for applying a resilient end pressure on the worm shaft but I do not limit myself to this specific structure.

What I claim is:

1. In an elevator hoisting apparatus, tandem gearing comprising a shaft having oppositely pitched worms thereon, and means for applying a longitudinal resilient pressure to one end of said shaft.

2. In an elevator hoisting apparatus, a shaft having right and left hand worms, gears meshing with said worms and connected with each other, and means for applying a resilient end pressure to one end of said shaft.

3. In an elevator hoisting apparatus, a shaft having right and left hand worms, gears meshing with said worms and with each other, and means for applying a resilient end pressure to one end of said shaft.

4. In an elevator hoisting apparatus, a shaft having right and left hand worms, gears meshing with said worms and con-

nected with each other, and a shock absorber comprising a compression spring arranged to apply a resilient pressure to one end of said shaft.

5. In an elevator hoisting apparatus, a shaft having right and left hand worms, gears meshing with said worms and connected with each other, a shock absorber comprising a compression spring arranged to apply a resilient pressure to one end of the shaft, and means for adjusting the amount of said pressure.

6. In an elevator hoisting apparatus, a shaft having right and left hand worms, gears meshing with said worms and connected with each other, and a shock absorber comprising a compression spring, means for adjusting the compression of the spring and an anti-friction bearing between the spring and the end of the shaft.

7. In an elevator hoisting apparatus, a shaft having right and left hand worms, a casing supporting said shaft, gears meshing with said worms and with each other, and a shock absorber comprising a housing adapted to be affixed to the shaft supporting casing, a compression spring, an adjusting bolt therefor projecting through the housing, and an anti-friction bearing between the spring and the end of the shaft.

In witness whereof, I have hereunto set my hand this 30th day of March 1912.

WILLIAM T. CLARK.

Witnesses:

DANIEL MCCARMACK,

D. P. WARREN.