(12) INTERNATIONAL APPLICATION PUBLISHED UNDER THE PATENT COOPERATION TREATY (PCT)

(19) World Intellectual Property Organization
International Bureau

(43) International Publication Date
2 October 2008 (02.10.2008)

PCT

(10) International Publication Number
WO 2008/118359 A1

(51) International Patent Classification:
G06F 17/50 (2006.01) *G06T 7/60* (2006.01)

(21) International Application Number:
PCT/US2008/003738

(22) International Filing Date: 21 March 2008 (21.03.2008)

(25) Filing Language: English

(26) Publication Language: English

(30) Priority Data:
60/896,709 23 March 2007 (23.03.2007) US
12/052,270 20 March 2008 (20.03.2008) US

(71) Applicant *(for all designated States except US)*: **SIEMENS PRODUCT LIFECYCLE MANAGEMENT SOFTWARE INC.** [US/US]; 5800 Granite Parkway, Suite 600, Plano, Texas 75024 (US).

(72) Inventors; and

(75) Inventors/Applicants *(for US only)*: **JOSHI, Nilesh** [IN/US]; 2000 Eastman Drive, Milford, Ohio 45150 (US). **MAHAJANI, Mandar** [IN/US]; 2000 Eastman Drive, Milford, Ohio 45150 (US).

(74) Agents: **HARLAN, James, I.** et al.; Siemens Corporation- Intellectual Property Dept., 170 Wood Avenue South, Iselin, New Jersey 08830 (US).

(81) Designated States *(unless otherwise indicated, for every kind of national protection available)*: AE, AG, AL, AM, AO, AT, AU, AZ, BA, BB, BG, BH, BR, BW, BY, BZ, CA, CH, CN, CO, CR, CU, CZ, DE, DK, DM, DO, DZ, EC, EE, EG, ES, FI, GB, GD, GE, GH, GM, GT, HN, HR, HU, ID, IL, IN, IS, JP, KE, KG, KM, KN, KP, KR, KZ, LA, LC, LK, LR, LS, LT, LU, LY, MA, MD, ME, MG, MK, MN, MW, MX, MY, MZ, NA, NG, NI, NO, NZ, OM, PG, PH, PL, PT, RO, RS, RU, SC, SD, SE, SG, SK, SL, SM, SV, SY, TJ, TM, TN, TR, TT, TZ, UA, UG, US, UZ, VC, VN, ZA, ZM, ZW.

(84) Designated States *(unless otherwise indicated, for every kind of regional protection available)*: ARIPO (BW, GH, GM, KE, LS, MW, MZ, NA, SD, SL, SZ, TZ, UG, ZM, ZW), Eurasian (AM, AZ, BY, KG, KZ, MD, RU, TJ, TM), European (AT, BE, BG, CH, CY, CZ, DE, DK, EE, ES, FI, FR, GB, GR, HR, HU, IE, IS, IT, LT, LU, LV, MC, MT, NL,

[Continued on next page]

(54) Title: SYSTEM AND METHOD FOR SECTION INERTIA ANALYSIS

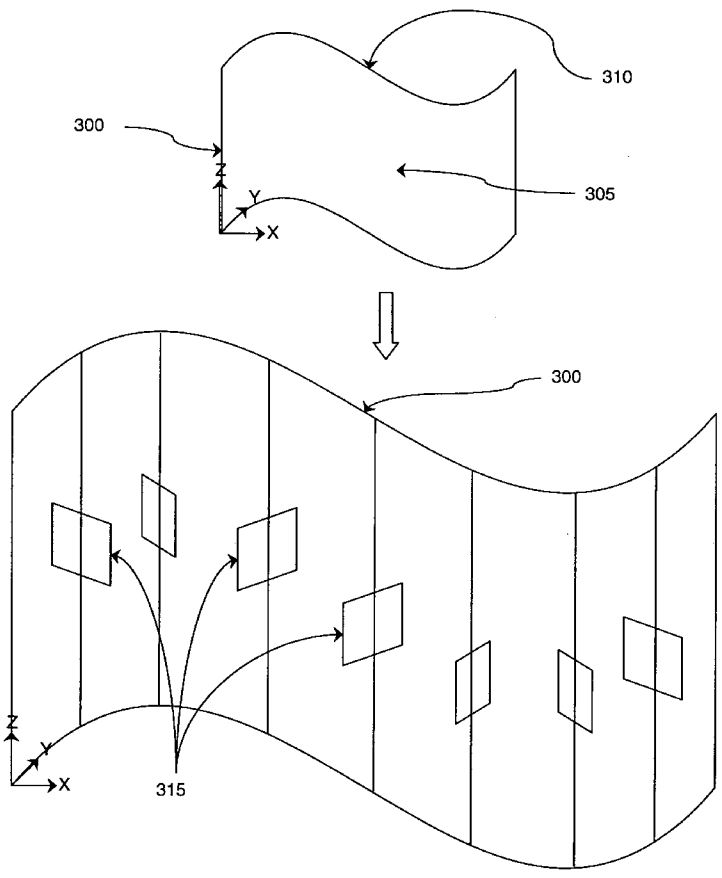

Fig. 3

(57) Abstract: A system, method, and computer program for section analysis, comprising selecting a set of topology on said model; generating a plurality of planar sections from said set of topology; and computing a section property for each of said planar sections; whereby a plurality of section properties are determined for said planar sections, and appropriate means and computer-readable instructions.

WO 2008/118359 A1

NO, PL, PT, RO, SE, SI, SK, TR), OAPI (BF, BJ, CF, CG, CI, CM, GA, GN, GQ, GW, ML, MR, NE, SN, TD, TG).

Published:
— *with international search report*

SYSTEM AND METHOD FOR SECTION INERTIA ANALYSIS

Cross-Reference to Related Applications

[Para 1] This Application claims priority to pending Provisional U.S. Application Ser. No. 60/896,709, filed on March 23, 2007.

Technical Field

[Para 2] The presently preferred embodiment of the innovations described herein relate generally to software applications. More specifically, the presently preferred embodiment relates to section inertia analysis for a geometry.

Background

[Para 3] Users working in a CAD application frequently design 3D shapes with various cross-sections. Having a shape with various cross-sections, there is often a need to analyze properties of the cross sections at different locations. The properties are geometric in nature and communicate to the user information such as strength under various load conditions. Unfortunately CAD design packages lack this capability.

[Para 4] What is needed is a system and method for section inertia analysis on cross-sections of various intricate shapes.

Summary

[Para 5] To achieve the foregoing, and in accordance with the purpose of the presently preferred embodiment as described herein, the present application provides a computer implemented method for section analysis, comprising selecting a set of topology on said model; generating a plurality of planar sections from said set of topology; and computing a section property for each of said

planar sections; whereby a plurality of section properties are determined for said planar sections. The method, further comprising calculating a variation of said section properties along a path. The method, further comprising determining a mode for a model. The method, wherein said mode is a principal axes. The method, wherein said mode is a set of curves. The method, wherein said section property is an area property. The method, wherein said section property is a mass property.

[Para 6] An advantage of the presently preferred embodiment is to provide a computer-program product tangibly embodied in a machine readable medium to perform a method for section analysis, comprising instructions operable to cause a computer to select a set of topology on said model; generate a plurality of planar sections from said set of topology; and compute a section property for each of said planar sections; whereby a plurality of section properties are determined for said planar sections. The computer-program product, further comprising instructions to calculate a variation of said section properties along a path. The computer-program product, further comprising instructions to determine a mode for a model. The computer-program product, wherein said mode is a principal axes. The computer-program product, wherein said mode is a set of curves. The computer-program product, wherein said section property is an area property. The computer-program product, wherein said section property is a mass property.

[Para 7] Another advantage of the presently preferred embodiment is to provide a computer implemented method to calculate geometric properties, comprising displaying a model; identifying a set of topologies on said model;

generating a plurality of planar sections derived from said set of topologies; calculating a plurality of geometric properties from said plurality of planar sections; analyzing a section inertia from said plurality of geometric properties. The method, wherein said model is one of a solid and a sheet-metal. The method, wherein said set of topologies is at least one of an edge and a face. The method, wherein one of said set of topologies is a curve. The method, wherein one of said geometric properties is a section area.

[Para 8] And another advantage of the presently preferred embodiment is to provide a data processing system having at least a processor and accessible memory to implement a method for section analysis, comprising means for determining a mode for a model; means for selecting a set of topology on said model; means for generating a plurality of planar sections from said set of topology; and means for computing a section property for an individual one of said planar sections.

[Para 9] Other advantages of the presently preferred embodiment will be set forth in part in the description and in the drawings that follow, and, in part will be learned by practice of the presently preferred embodiment. The presently preferred embodiment will now be described with reference made to the following Figures that form a part hereof. It is understood that other embodiments may be utilized and changes may be made without departing from the scope of the presently preferred embodiment.

Brief Description of the Drawings

[Para 10] A presently preferred embodiment will hereinafter be described in conjunction with the appended drawings, wherein like designations denote like elements, and:

[Para 11] **Figure 1** is a logic flow diagram of the method employed by the presently preferred embodiment;

[Para 12] **Figure 2** illustrates a model that has been sectioned;

[Para 13] **Figure 3** illustrates a model that has been sectioned;

[Para 14] **Figure 4** illustrates an example model that has been sectioned; and

[Para 15] **Figure 5** is a block diagram of a computer environment in which the presently preferred embodiment may be practiced.

Detailed Description of the Preferred Embodiments

[Para 16] The numerous innovative teachings of the present application will be described with particular reference to the presently preferred embodiments. It should be understood, however, that this class of embodiments provides a few examples of the many advantageous uses of the innovative teachings herein. The presently preferred embodiment provides, among other things, a system and method for section inertia analysis on a geometric shape. Now therefore, in accordance with the presently preferred embodiment, an operating system executes on a computer, such as a general-purpose personal computer.

System

[Para 17] **Figure 5** and the following discussion are intended to provide a brief, general description of a suitable computing environment in which the

presently preferred embodiment may be implemented. Although not required, the presently preferred embodiment will be described in the general context of computer-executable instructions, such as program modules, being executed by a personal computer. Generally program modules include routines, programs, objects, components, data structures, etc., that perform particular tasks or implementation particular abstract data types. The presently preferred embodiment may be performed in any of a variety of known computing environments. Referring to Figure 4, an exemplary system for implementing the presently preferred embodiment includes a general-purpose computing device in the form of a computer **500**, such as a desktop or laptop computer, including a plurality of related peripheral devices (not depicted). The computer 500 includes a microprocessor **505** and a bus **510** employed to connect and enable communication between the microprocessor 505 and a plurality of components of the computer 500 in accordance with known techniques. The bus 510 may be any of several types of bus structures including a memory bus or memory controller, a peripheral bus, and a local bus using any of a variety of bus architectures. The computer 500 typically includes a user interface adapter **515**, which connects the microprocessor 505 via the bus 510 to one or more interface devices, such as a keyboard **520**, mouse **525**, and/or other interface devices **530**, which can be any user interface device, such as a touch sensitive screen, digitized pen entry pad, etc. The bus 510 also connects a display device **535**, such as an LCD screen or monitor, to the microprocessor 505 via a display adapter **540**. The bus 510 also connects the microprocessor 505 to a memory **545**, which can include ROM, RAM,

etc.

[Para 18] The computer 500 further includes a drive interface **550** that couples at least one storage device **555** and/or at least one optical drive **560** to the bus. The storage device 555 can include a hard disk drive, not shown, for reading and writing to a disk, a magnetic disk drive, not shown, for reading from or writing to a removable magnetic disk drive. Likewise the optical drive 560 can include an optical disk drive, not shown, for reading from or writing to a removable optical disk such as a CD ROM or other optical media. The aforementioned drives and associated computer-readable media provide non-volatile storage of computer readable instructions, data structures, program modules, and other data for the computer 500.

[Para 19] The computer 500 can communicate via a communications channel **565** with other computers or networks of computers. The computer 500 may be associated with such other computers in a local area network (LAN) or a wide area network (WAN), or it can be a client in a client/server arrangement with another computer, etc. Furthermore, the presently preferred embodiment may also be practiced in distributed computing environments where tasks are performed by remote processing devices that are linked through a communications network. In a distributed computing environment, program modules may be located in both local and remote memory storage devices. These configurations, as well as the appropriate communications hardware and software, are known in the art.

[Para 20] Software programming code that embodies the presently preferred embodiment is typically stored in the memory 545 of the computer 500. In the

client/server arrangement, such software programming code may be stored with memory associated with a server. The software programming code may also be embodied on any of a variety of non-volatile data storage device, such as a hard-drive, a diskette or a CD-ROM. The code may be distributed on such media, or may be distributed to users from the memory of one computer system over a network of some type to other computer systems for use by users of such other systems. The techniques and methods for embodying software program code on physical media and/or distributing software code via networks are well known and will not be further discussed herein.

Section Inertia Analysis

[Para 21] **Figure 1** is a logic flow diagram of the method employed by the presently preferred embodiment. Referring to Figure 1 and explained in greater detail below, the method determines a mode for a model **(Step 105)** for section analysis **100**. Next, the method selects a set of topology on said model **(Step 110)**. Then, the method generates a plurality of planar sections from said set of topology **(Step 115)**. And lastly, the method computes a section property for an individual one of said planar sections **(Step 120)** so that a plurality of sectional properties are determined from said computed area of said planar sections. This method may be used during the initial design of structural (load bearing) sections for automotive body in white (BIW) components. Additionally, the functionality described may be used during the design of key sections to analyze section properties regarding the moments of inertia for use in bending and torsion analysis. This functionality exists in three modes comprising user selectable local

or global principal axes for slicing purposes, or, alternatively, a user predetermined set of curves to slice along. The user therefore has multiple configurations upon which to analyze the section inertial properties.

[Para 22] **Figure 2** illustrates a model that has been sectioned. Referring to Figure 2, the user begins with a model **200** for which the knowledge of certain solid properties are desired, such as section center of gravity, section length, section area, shear center, etc. The model may be a solid model with closed sections as depicted in Figure 2, or a sheet metal as depicted in Figure 3, below. The user determines a number of parallel sections **205** that are spaced a chosen distance apart within the model 200, for example, 20 millimeters, where the model 200 is oriented according to the users intent such as relative to the model. Alternatively, the user could have oriented the model relative to an absolute position known in the art of CAD software should the absolute position differ from the component position of the model. Executing a section analysis command takes the number of parallel sections 205 as an input, and outputs information pertaining to the desired properties as illustrated in Table 1.

Table 1

Section #	CG-XC	CG-YC	CG-ZC	CG-X	CG-Y	CG-Z	SL	SA
1	2.93	-0.23	1.98	2.93	-0.23	1.98	15.83	3.87
2	2.93	-0.23	1.98	2.93	-0.23	1.98	15.83	3.87
3	2.93	-0.23	1.98	2.93	-0.23	1.98	15.83	3.87

The properties can then be exported to another application for analysis, such as a spreadsheet to plot structural properties on graphs, for example.

[Para 23] **Figure 3** illustrates a model that has been sectioned. Referring to

Figure 3, the user begins with a sheet model **300** for which the knowledge of certain properties are desired, such as section center of gravity, section length, section area, shear center, etc. The user determines a topology **305** and a path **310**, the case the edge of the sheet metal, along which a number of parallel sections **315** that are spaced a certain distance apart within the sheet model 300, for example, 20 millimeters, where the sheet model 300 is oriented according to the users intent such as relative to the model. Alternatively, the user could have oriented the model relative to an absolute position should absolute differ from the model. It is understood in the art that topology references an edge, a face, a point or other topological construct, so a set of topology can include any combination such as a face and an edge, or multiple faces, etc.. Executing a section analysis command takes the number of parallel sections 315 as an input, and outputs information pertaining to the desired properties as illustrated in Table 2.

Table 2

Section #	CG-XC	CG-YC	CG-ZC	CG-X	CG-Y	CG-Z	SL	SA
1	82.34	-75.45	39.00	82.34	-75.45	39.00	156.08	3.12
2	66.06	-63.84	39.00	66.06	-63.84	39.00	156.08	3.12
3	50.82	-50.91	39.00	50.82	-50.91	39.00	156.08	3.12
4	40.03	-34.41	39.00	40.03	-34.41	39.00	156.08	3.12
5	64.69	-46.13	39.00	64.69	-46.13	39.00	312.16	6.24
6	69.29	-11.63	39.00	69.29	-11.63	39.00	156.08	3.12
7	86.47	-1.76	39.00	86.47	-1.76	39.00	156.08	3.12

[Para 24] The command may be used to analyze closed or open 2D sections for example in the field of structural engineering. When any complex solid / sheet is created, depending on the loading it is necessary for the user to make sure that

the strength is uniform. If the user has a 2D section, method described on that section to give quick area inertia properties. If the user inputs a set of 3D faces, the set of faces are sliced in required direction to produce multiple 2D sections so that an individual one of these sections may be analyzed for the same properties. The user can study the variation of these properties along the faces and accordingly enhance model design.

[Para 25] Previously discussed modes include solid and sheet modes. The solid analysis preferably requires a closed section (profile), and it assumes that the sliced section is a sheet while analyzing the area. On the other hand, for a sheet analysis, the hollow section analysis effectively thickens the profile on both sides to create an annular sheet. The area of the annular sheet is analyzed for the inertia properties.

[Para 26] The presently preferred embodiment also allows the user to compute the solid or hollow properties of the given section as explained above. In the case of solid analysis, the section is treated as a sheet. In the case of hollow analysis, the section is offset in both directions to create annular sheet. Sample properties that the user can select for computation are: section center of gravity, length, area, second principal (area) moments of inertia, principal axes for those moments of inertia, equivalent rectangle oriented along the principal axes. The user can optionally select for output the following: annotations documenting the above properties, datum planes where the slicing was performed, the curves resulted from slicing (the section analyzed), lines depicting principal axes and equivalent

rectangle. The output of data is beneficial as the user continues to design the model from the visual indicators as to properties of previous sections.

[Para 27] **Figure 4** illustrates an example model that has been sectioned. Referring to the example illustrated in Figure 4, an irregular shape **400** resembling a "filled-in" folded taco or potato chip is determined to have section properties determined by the methods employed in the presently preferred embodiment. The user determined a mode to be a set of curves, because the irregular shape 400 is comprised of one edge of irregular shape and two faces. To that end, the user selects two faces **405,410**, respectively, upon which to base the section determination; as well as a curve path **415**. In the prior examples, a distance of 20mm was selected to determine the distance between slices, however, in this example; the user has selected to request the properties on two sections. After executing the operation described above, the user is not only presented with a visual indication **420** of the slices taken on the irregular shape 400, but the user was also presented with section data that is a visible annotation **425** while continuing with the design process. This visual indication is particularly helpful when, as explained previously, the user desires to keep certain properties consistent from one section to the next, such as section area to keep volume consistent, for example.

Conclusion

[Para 28] The presently preferred embodiment may be implemented in digital electronic circuitry, or in computer hardware, firmware, software, or in combinations thereof. An apparatus of the presently preferred embodiment may

be implemented in a computer program product tangibly embodied in a machine-readable storage device for execution by a programmable processor; and method steps of the presently preferred embodiment may be performed by a programmable processor executing a program of instructions to perform functions of the presently preferred embodiment by operating on input data and generating output.

[Para 29] The presently preferred embodiment may advantageously be implemented in one or more computer programs that are executable on a programmable system including at least one programmable processor coupled to receive data and instructions from, and to transmit data and instructions to, a data storage system, at least one input device, and at least one output device. The application program may be implemented in a high-level procedural or object-oriented programming language, or in assembly or machine language if desired; and in any case, the language may be a compiled or interpreted language.

[Para 30] Generally, a processor will receive instructions and data from a read-only memory and/or a random access memory. Storage devices suitable for tangibly embodying computer program instructions and data include all forms of nonvolatile memory, including by way of example semiconductor memory devices, such as EPROM, EEPROM, and flash memory devices; magnetic disks such as internal hard disks and removable disks; magneto-optical disks; and CD-ROM disks. Any of the foregoing may be supplemented by, or incorporated in, specially-designed ASICs (application2-specific integrated circuits).

[Para 31] A number of embodiments have been described. It will be

understood that various modifications may be made without departing from the spirit and scope of the presently preferred embodiment. The user, for example, can select or create a curve path along which to analyze faces. It is further contemplated that once the use defines new sections from the ones already determined, the display of section properties is used to assist in the creation of sections that possess the desired packaging space. Therefore, other implementations are within the scope of the following claims.

What is claimed is:

[Claim 1] A computer implemented method for section analysis, comprising:

selecting a set of topology on said model;

generating a plurality of planar sections from said set of topology; and

computing a section property for each of said planar sections;

whereby a plurality of section properties are determined for said planar sections.

[Claim 2] The method of claim 1, further comprising calculating a variation of said section properties along a path.

[Claim 3] The method of claim 1, further comprising determining a mode for a model.

[Claim 4] The method of claim 3, wherein said mode is a principal axes.

[Claim 5] The method of claim 3, wherein said mode is a set of curves.

[Claim 6] The method of claim 1, wherein said section property is an area property.

[Claim 7] The method of claim 1, wherein said section property is a mass property.

[Claim 8] A computer-program product tangibly embodied in a machine readable medium to perform a method for section analysis, comprising instructions operable to cause a computer to:

select a set of topology on said model;

generate a plurality of planar sections from said set of topology; and

compute a section property for each of said planar sections;

whereby a plurality of section properties are determined for said planar sections.

[Claim 9] The computer-program product of claim 8, further comprising instructions to calculate a variation of said section properties along a path.

[Claim 10] The computer-program product of claim 8, further comprising instructions to determine a mode for a model.

[Claim 11] The computer-program product of claim 10, wherein said mode is a principal axes.

[Claim 12] The computer-program product of claim 10, wherein said mode is a set of curves.

[Claim 13] The computer-program product of claim 8, wherein said section property is an area property.

[Claim 14] The computer-program product of claim 8, wherein said section property is a mass property.

[Claim 15] A computer implemented method to calculate geometric properties, comprising:

displaying a model;

identifying a set of topologies on said model;

generating a plurality of planar sections derived from said set of topologies;

calculating a plurality of geometric properties from said plurality of planar

sections;

analyzing a section inertia from said plurality of geometric properties.

[Claim 16] The method of claim 15, wherein said model is one of a solid and a sheet-metal.

[Claim 17] The method of claim 15, wherein said set of topologies is at least one of an edge and a face.

[Claim 18] The method of claim 15, wherein one of said set of topologies is a curve.

[Claim 19] The method of claim 15, wherein one of said geometric properties is a section area.

[Claim 20] A data processing system having at least a processor and accessible memory to implement a method for section analysis, comprising:

means for selecting a set of topology on said model;

means for generating a plurality of planar sections from said set of topology; and

means for computing a section property for each of said planar sections.

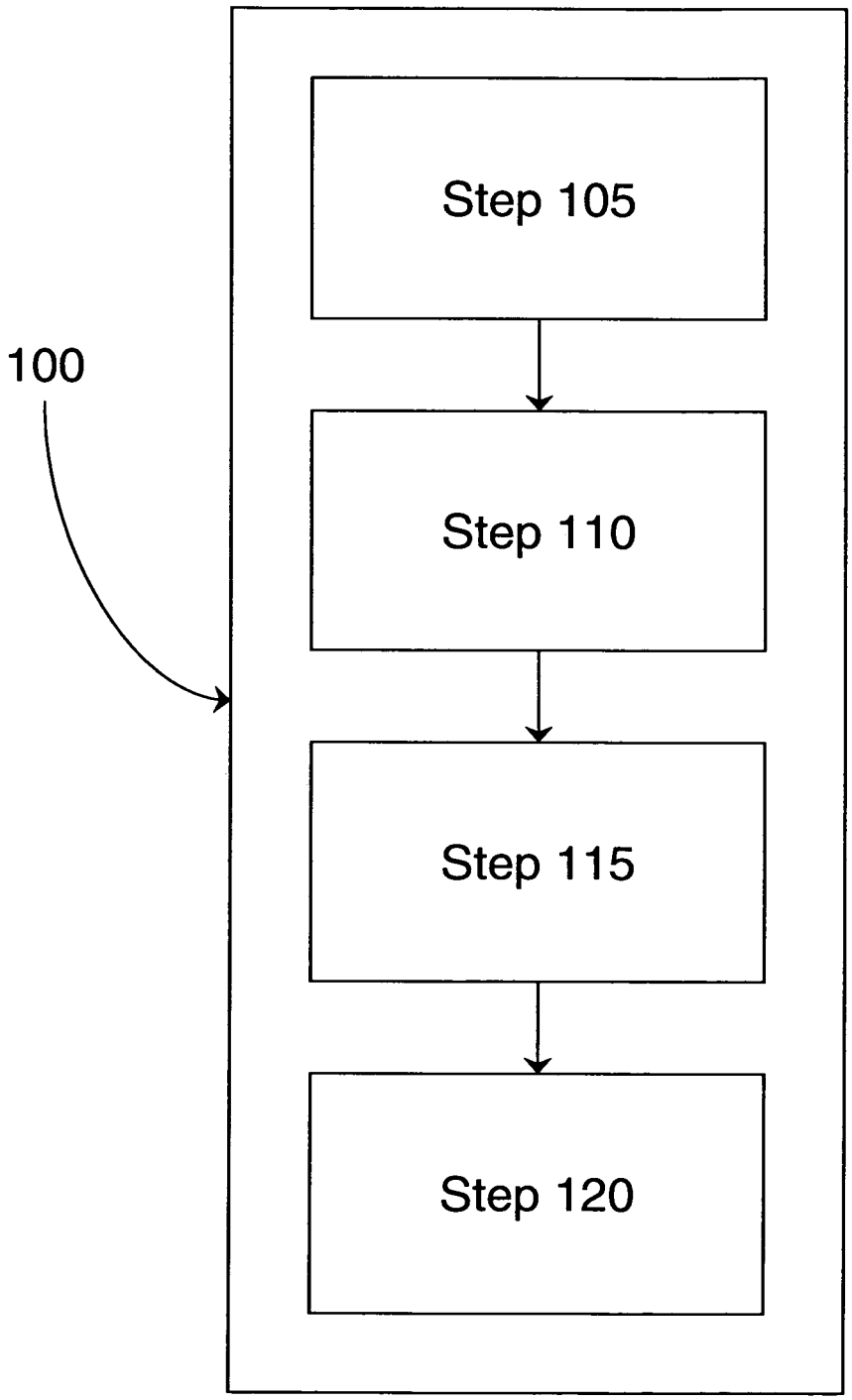

Fig. 1

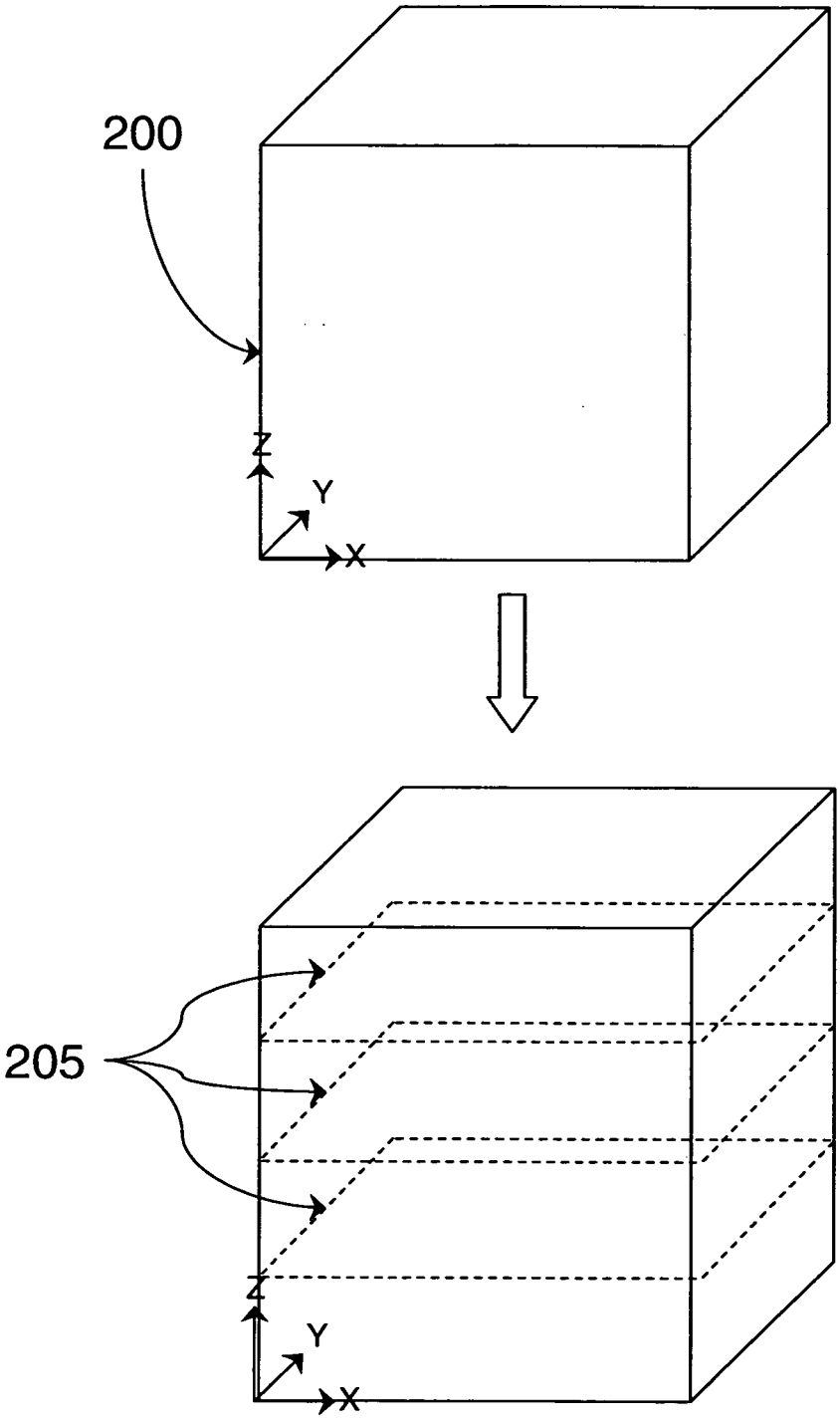

Fig. 2

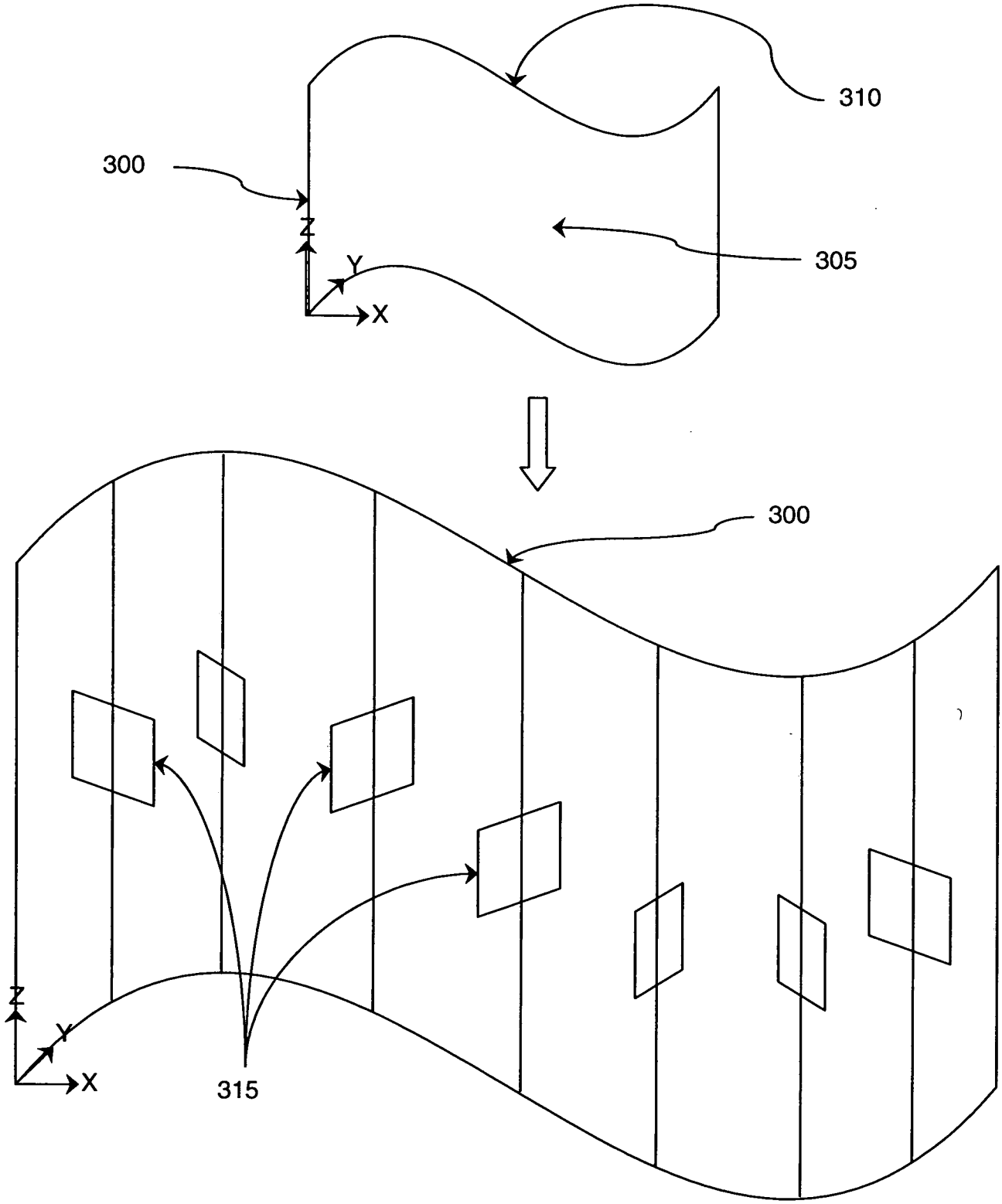

Fig. 3

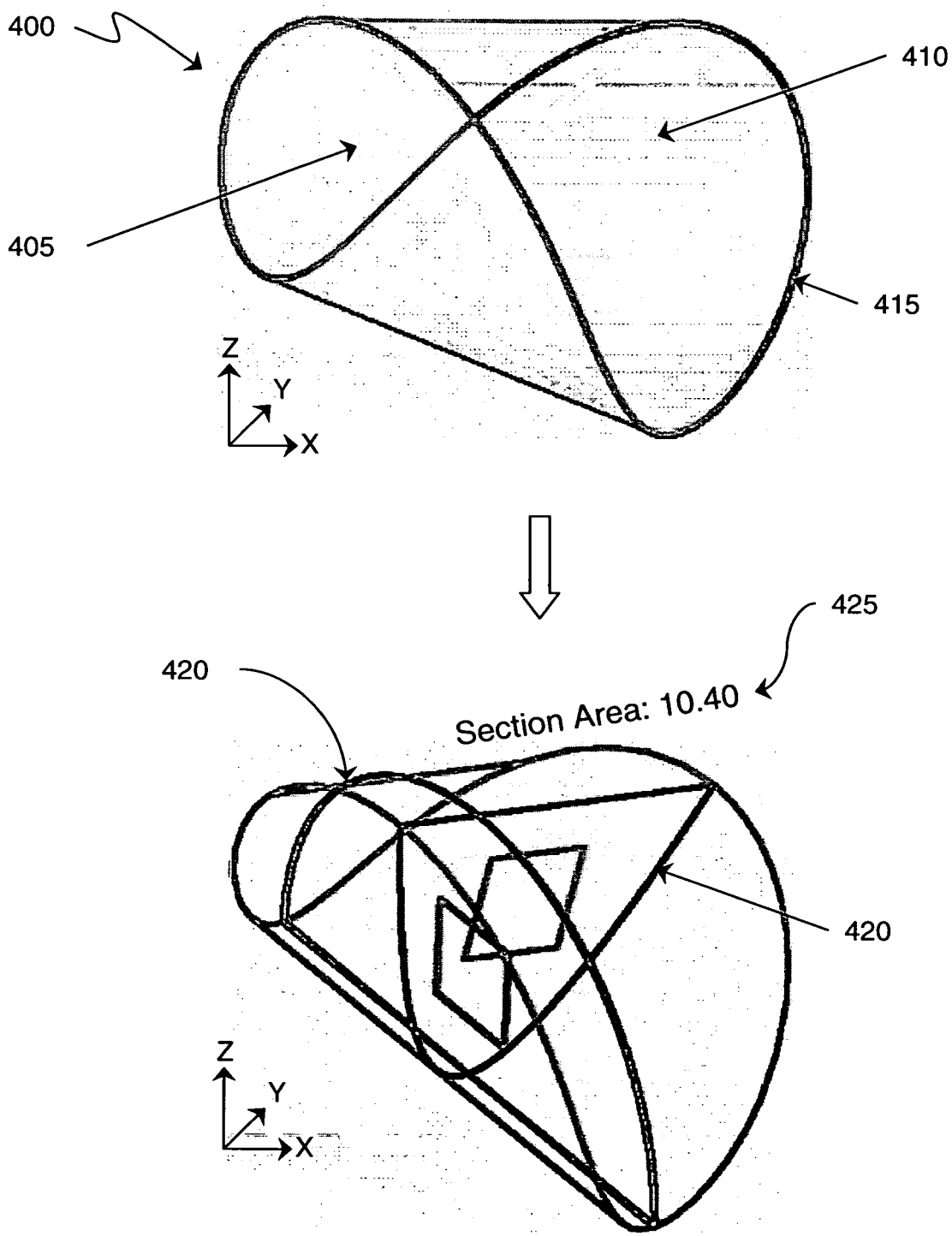

Fig. 4

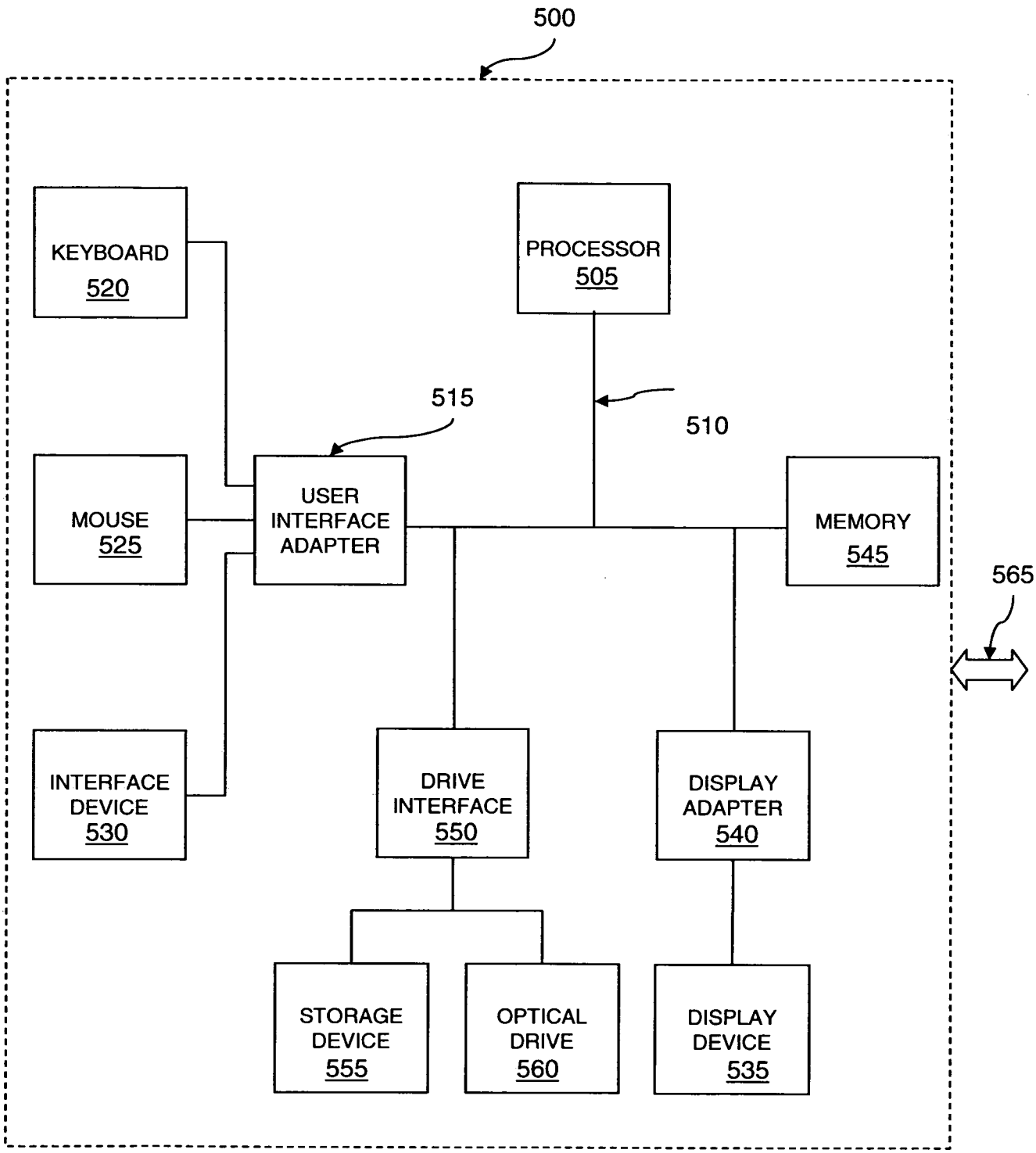
500
KEYBOARD
520
PROCESSOR
505
515
510
MOUSE
525
USER
INTERFACE
ADAPTER
MEMORY
545
565
INTERFACE
DEVICE
530
DRIVE
INTERFACE
550
DISPLAY
ADAPTER
540
STORAGE
DEVICE
555
OPTICAL
DRIVE
560
DISPLAY
DEVICE
535

Fig. 5

INTERNATIONAL SEARCH REPORT

International application No
PCT/US2008/003738

A. CLASSIFICATION OF SUBJECT MATTER
INV. G06F17/50
ADD. G06T7/60

According to International Patent Classification (IPC) or to both national classification and IPC

B. FIELDS SEARCHED

Minimum documentation searched (classification system followed by classification symbols)
G06F G06T

Documentation searched other than minimum documentation to the extent that such documents are included in the fields searched

Electronic data base consulted during the international search (name of data base and, where practical, search terms used)
EPO-Internal

C. DOCUMENTS CONSIDERED TO BE RELEVANT

Category*	Citation of document, with indication, where appropriate, of the relevant passages	Relevant to claim No.
X	PARAMETRIC TECHNOLOGY CORPORATION: "BEHAVIORAL MODELING TASK GUIDE" PRO/ENGINEER USER MANUAL, 1999, pages I-4-30, XP007904996 Waltham, MA., USA pages 1-2 pages 1-8 - pages 1-11 pages 2-1, paragraph 1 - pages 2-5, paragraph 2 pages 4-7 - pages 4-9; figures p.4-7	1-20
A,P	US 2007/078636 A1 (ELSBERG NATHAN [IL] ET AL) 5 April 2007 (2007-04-05) paragraphs [0092] - [0106]	1-20

☐ Further documents are listed in the continuation of Box C.

☒ See patent family annex.

* Special categories of cited documents :

"A" document defining the general state of the art which is not considered to be of particular relevance

"E" earlier document but published on or after the international filing date

"L" document which may throw doubts on priority claim(s) or which is cited to establish the publication date of another citation or other special reason (as specified)

"O" document referring to an oral disclosure, use, exhibition or other means

"P" document published prior to the international filing date but later than the priority date claimed

"T" later document published after the international filing date or priority date and not in conflict with the application but cited to understand the principle or theory underlying the invention

"X" document of particular relevance; the claimed invention cannot be considered novel or cannot be considered to involve an inventive step when the document is taken alone

"Y" document of particular relevance; the claimed invention cannot be considered to involve an inventive step when the document is combined with one or more other such documents, such combination being obvious to a person skilled in the art.

"&" document member of the same patent family

Date of the actual completion of the international search	Date of mailing of the international search report
20 June 2008	01/07/2008

Name and mailing address of the ISA/	Authorized officer
European Patent Office, P.B. 5818 Patentlaan 2 NL – 2280 HV Rijswijk Tel. (+31-70) 340-2040, Tx. 31 651 epo nl, Fax: (+31-70) 340-3016	Sohrt, Wolfgang

INTERNATIONAL SEARCH REPORT

Information on patent family members

International application No
PCT/US2008/003738

Patent document cited in search report	Publication date	Patent family member(s)	Publication date
US 2007078636 A1	05-04-2007	US 2008021680 A1	24-01-2008