235-382 SR

OR 3,744,027

United Stat[redacted]

Uemura et al.

[11] **3,744,027**

[45] **July 3, 1973**

RSD

[54] **MAGNETIC VERIFING SYSTEM**

[75] Inventors: **Saburo Uemura,** Kanagawa-ken; **Muneo Iwamoto,** Tokyo, both of Japan

[73] Assignee: **Sony Corporation,** Tokyo, Japan

[22] Filed: **Feb. 22, 1972**

[21] Appl. No.: **227,750**

[30] **Foreign Application Priority Data**

Feb. 25, 1971 Japan 46/1154

[52] **U.S. Cl.** ..... **340/147 MD,** 317/134

[51] **Int. Cl.** **H01h 47/34,** H04q 3/00

[58] **Field of Search** ..... 340/149 R, 164 R, 340/167 B, 168 S, 365 L, 147 MD; 317/134

[56] **References Cited**

UNITED STATES PATENTS

3,453,598	7/1969	Schweizer	340/149 A
3,327,290	6/1967	English	340/164 X
3,353,030	11/1967	Michel	340/365 L UX

Primary Examiner—Donald J. Yusko

Attorney—Lewis H. Eslinger et al.

[57] **ABSTRACT**

An electronic indicating device is responsive to a source of high frequency current transmitted through a plurality of cascade connected, saturable core transformers. The transmission of the current is blocked by the application of a first magnetic field of predetermined strength and direction to saturate selected transformers. The transmission of the current is restored by the application of a second magnetic field to the selected transformers which substantially cancels the effect of the first field.

8 Claims, 9 Drawing Figures

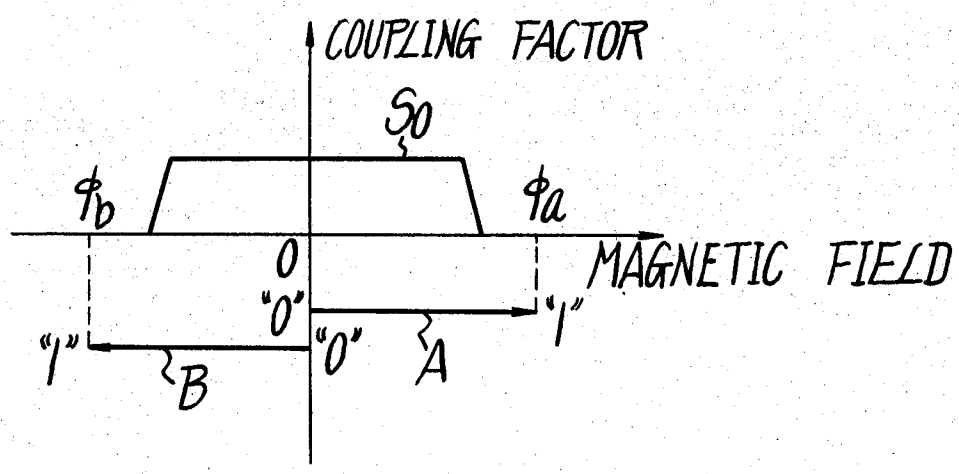

Fig. 1

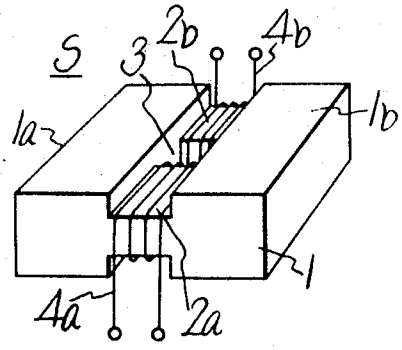

Fig. 2

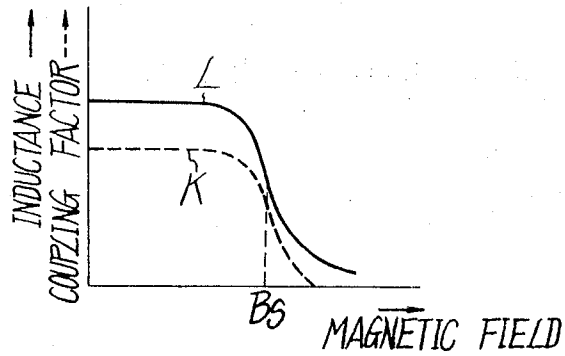

Fig. 3

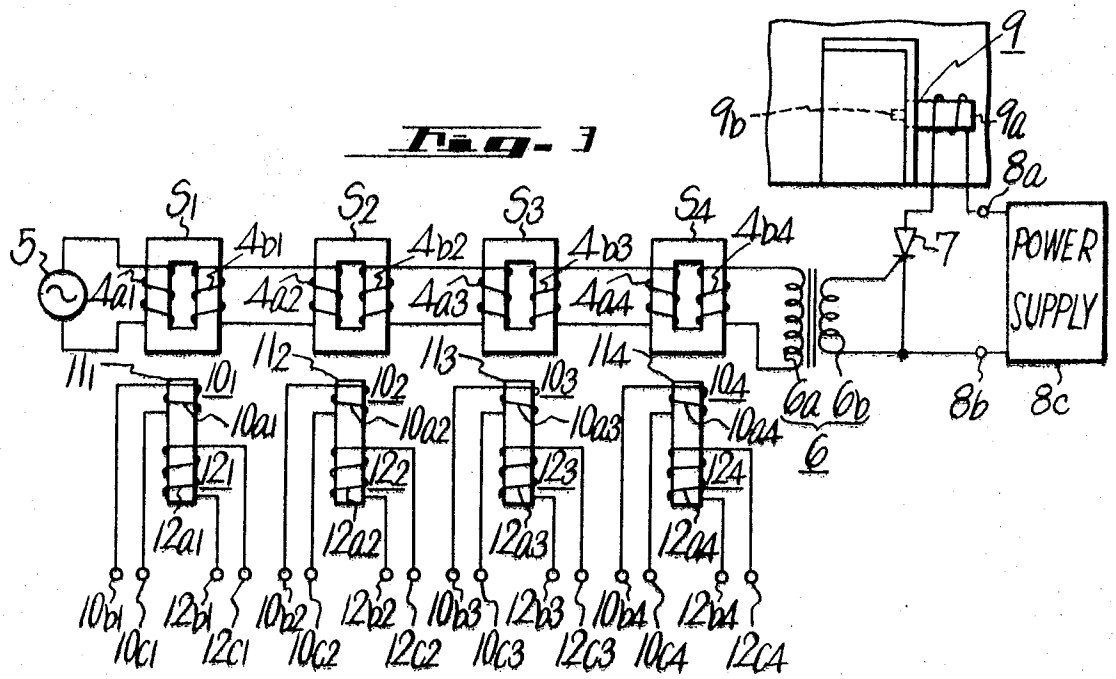

Fig. 4

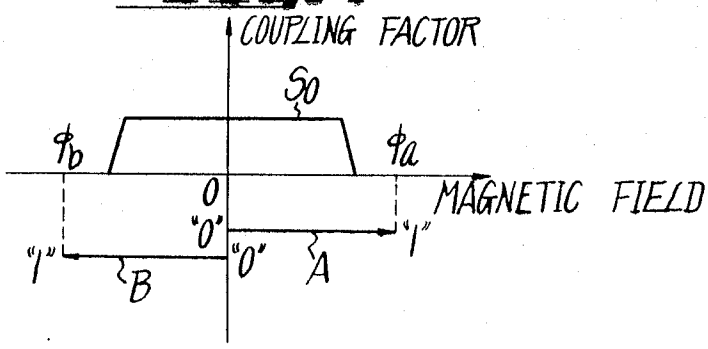

Fig. 5

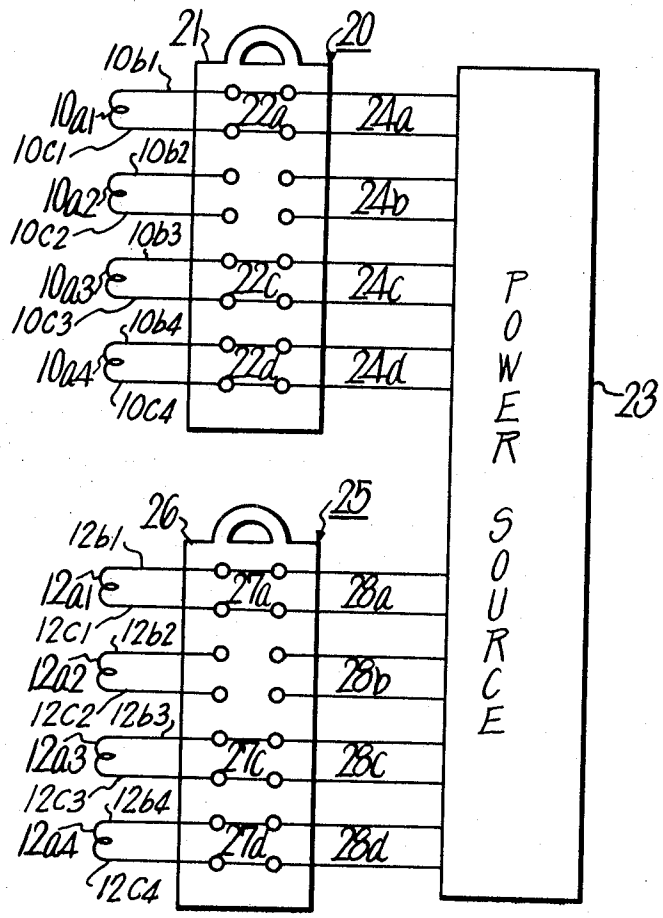
21
20
10b1
10a1
10c1
10b2
10a2
10c2
10b3
10a3
10c3
10b4
10a4
10c4
22a
22c
22d
24a
24b
24c
24d
POWER SOURCE
23
26
25
12b1
12a1
12c1
12b2
12a2
12c2
12b3
12a3
12c3
12b4
12a4
12c4
27a
27c
27d
28a
28b
28c
28d

Fig. 6

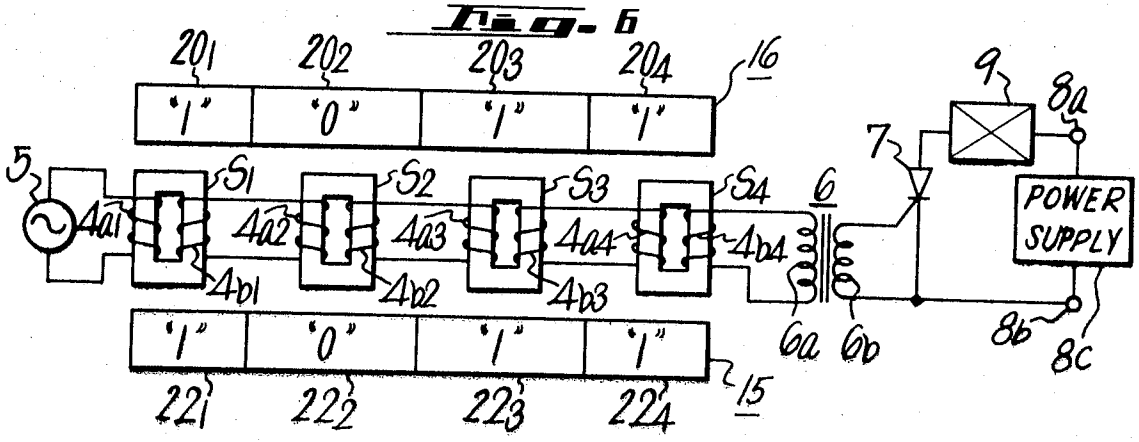
20₁
20₂
20₃
20₄
16
"1"
"0"
"1"
"1"
5
S1
S2
S3
S4
4a1
4a2
4a3
4a4
4b1
4b2
4b3
4b4
6
6a
6b
7
9
8a
8b
8c
POWER SUPPLY
"1"
"0"
"1"
"1"
22₁
22₂
22₃
22₄
15

Fig. 7

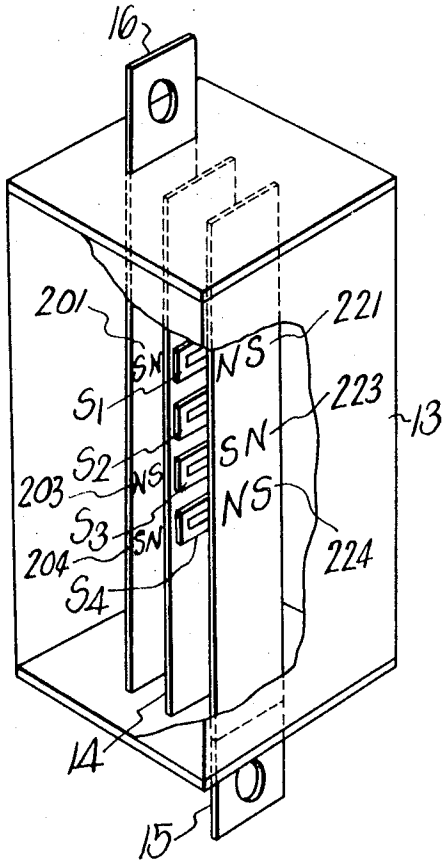

Fig. 8

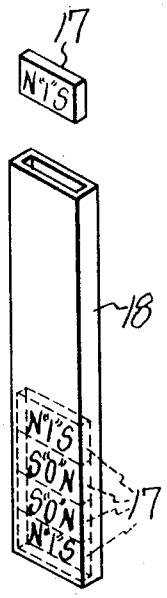

Fig. 9

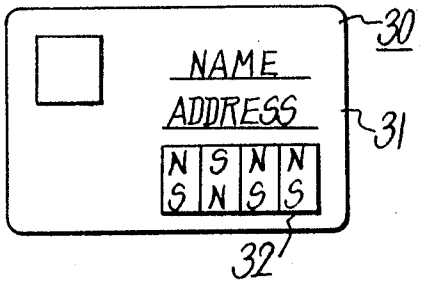

MAGNETIC VERIFING SYSTEM

BACKGROUND OF THE INVENTION

The invention relates to an improved magnetic verification system for use in controlling electronic indicating devices such as electronic locks by means of printed circuit keys, magnetically coated credit cards, checks, and the like.

There has been an increase in the requirement for electronic locking systems in place of prior art mechanical systems. Electronic locks have many advantages over mechanical methods such as being more difficult to pick and in allowing for a greater degree of sophistication in the coding of the lock and the key. A related application involves the verification of a code magnetically memorized on a credit card or check to determine whether, for example, the user of the card shall be entitled to purchase items on credit. One disadvantage of some prior art electronic locking or verification systems is that the code stored on the key or on the credit card must be read by complex electronic systems which are both expensive and impractical for ordinary use.

SUMMARY OF THE INVENTION

The above and other disadvantages are overcome by the magnetic verification system of the present invention which comprises a plurality of saturable core transformers cascade connected between the output of a source of high frequency current and an electronic indicating device such as a lock which is operated by the current. The transmission of the current to the lock through the transformers is controlled by a master magnetic biasing means which supplies magnetic fields in a predetermined direction to selected ones of the transformers such that they become saturated and incapable of transmitting the current and a key magnetic biasing means which supplies the selected transformers with individual magnetic fields in a direction opposite to that of the fields supplied by the master means so that the net magnetic fields are reduced to substantially zero, thereby unsaturating the selected transformers and allowing them to pass the current to the lock.

A control mechanism for the key magnetic biasing means is housed in a relatively small structure which may be easily carried by the user of the verification system. In some embodiments the control mechanisms for both magnetic biasing means are easily carried by the user of the system. In one preferred embodiment the control for the magnetic biasing means comprises printed circuit cards which allow a power source to be coupled to selected magnetic coils adjacent the transformer which generate the opposing magnetic fields. In another embodiment the magnetic biasing means comprise strips of material containing portions magnetized in predetermined directions which are placed adjacent the transformers. In still another embodiment the key magnetic biasing means comprises portions of a credit card which are magnetized in the predetermined directions and which are placed adjacent the transformers during the verification process.

It is therefore an object of the invention to provide a magnetic verification system which is simple in structure, reliable in operation, and compact in size.

It is another object of the invention to provide a magnetic verification system wherein binary codes are memorized in both a master key and a slave key such that the coding of the magnetic verification system may be easily changed.

The foregoing and other objections, features, and advantages of the invention will be more readily understood upon consideration of the following detailed description of certain preferred embodiments of the invention, taken in conjunction with the accompanying drawings.

BRIEF DESCRIPTION OF THE DRAWINGS

FIG. 1 is a perspective view of a saturable transformer employed in the invention;

FIG. 2 is a diagram illustrating the magnetic characteristics of the transformer of FIG. 1;

FIG. 3 is a schematic diagram of one embodiment of the invention;

FIG. 4 is a diagram for purposes of illustrating the operation of the embodiment of FIG. 3;

FIG. 5 is a schematic view of circuits for operating the magnetic biasing means of the embodiment of FIG. 3;

FIG. 6 is a schematic diagram of a second embodiment of the invention;

FIG. 7 is a perspective view, with portions broken away, to illustrate one method of mounting the embodiment of FIG. 6;

FIG. 8 is a perspective view illustrating an alternative magnetic biasing means for use with the embodiment of FIG. 6; and

FIG. 9 is a plan view of a credit card for use with the embodiment of FIG. 6.

DESCRIPTION OF CERTAIN PREFERRED EMBODIMENTS

Referring now more particularly to FIG. 1 a saturable core transformer for use in all of the embodiments of the invention is shown having a core 1 of a magnetic material having high permiability and low coercivity such as a ferrite or the like. Core 1 has two opposed magnetic flux convergence portions 1*a* and 1*b* which are spaced apart by two magnetic flux saturable portions 2*a* and 2*b* which are parallel to each other and which straddle a center hole 3. The two magnetic flux saturable portions 2*a* and 2*b* have smaller cross-sectional areas than the cross-sectional areas of the magnetic flux convergence portions 1*a* and 1*b*. A primary winding 4*a* is wound around the portion 2*a* and a secondary winding 4*b* is wound around the portion 2*b* of the transformer.

In FIG. 2 a curve designated "L" illustrates the inductance characteristics of the primary and secondary windings 4*a* and 4*b* when the core 1 is placed in the presence of a magnetic field B. When the magnetic field is of no intensity or a very small intensity the inductance of the transformer windings is relatively constant, however, when the magnetic field intensity reaches the predetermined value denoted Bs the inductance of the windings becomes extremely low as compared with the original value. This is due to the fact that the portions 2*a* and 2*b* of the transformer become saturated in magnetic flux.

The curve designated K illustrates the coupling characteristics between the coils 4*a* and 4*b* in the presence of the magnetic field. When the magnetic field is of a relatively low intensity the coupling is at a substantially constant value, however, when the magnetic field is increased to the point of saturating the portions 2*a* and

2b the coupling factor drops off drastically. When the portions 2a and 2b are completely saturated the coupling factor may be reduced to about one tenth of its original value. The effect of this reduction in the coupling factor is that an alternating current signal impressed upon the primary winding 4a will not be transmitted through to the secondary winding 4b and thus the signal is blocked. The transformer S therefore becomes a switching device. By selectively applying a magnetic field of a predetermined strength and direction to the transformer it may be switched on or off.

Referring now to FIG. 3 a preferred embodiment of the invention comprises a plurality of saturable core transformers S1, S2, S3 and S4 which are cascade connected between a source of high frequency current 5 and an output transformer 6. The transformer S1 has a primary winding 4a1 connected to the output of the high frequency current source 5 and a secondary winding 4b1 which is connected to the primary winding 4a2 of the transformer S2. The secondary winding 4b2 of the transformer S2 is connected to the primary winding 4a3 of the transformer S3. The secondary winding 4b3 of the transformer S3 is connected to the primary winding 4a4 of the transformer S4. The secondary winding 4b4 of the transformer S4 is connected to the primary winding 6a of the output transformer 6.

The secondary winding 6b of the output transformer 6 has one lead connected to the gate electrode of a silicon controlled rectifier 7 (hereinafter referred to as SCR) and its other lead connected to the cathode of SCR 7. The anode of SCR 7 is connected to one lead of a solenoid 9a. The other lead of the solenoid 9a is connected to a power supply terminal 8a. A power supply terminal 8b is connected to the cathode of the SCR 7. The terminals 8a and 8b are supplied with power from a source 8c. The solenoid 9a operates a locking bar 9b which controls the opening of a door or the like. Together the solenoid 9a and the locking bar 9b comprise an electronic lock 9.

With the transformers S1, S2, S3, and S4 in an unsaturated state the source of high frequency current 5 supplies a signal which is transmitted through the transformers S1, S2, S3, and S4 to the output transformer 6 which causes the SCR 7 to switch on and allow current to flow through the solenoid 9a from the power source 8c. This causes the locking bar to be withdrawn into the energized solenoid 9a thereby unlocking a door or the like.

It is one feature of the invention that the transformers S1–S4, inclusive, may be selectively put into a saturated state by the application of a magnetic field so as to block the transmission of the high frequency current to the electronic lock 9. This is accomplished by means of a master magnetic biasing supply located adjacent the transformers. Once the selected transformers are saturated the system is locked. The system is unlocked by a key magnetic biasing supply which counteracts the magnetic fields used to lock the system and unsaturates the selected transformers to allow the high frequency current to be transmitted to the electronic lock 9.

Magnetic field biasing means 101, 102, 103 and 104 are mounted adjacent the transformers S1, S2, S3 and S4, respectively, to provide individual magnetic fields for both the master and key magnetic biasing supplies. The magnetic field biasing means 101 includes a bar core 111 and a winding 10a1 and a winding 12a1 which are wound on the bar core 101. The magnetic field biasing means 102 includes a bar core 112 having wound thereon a coil 10a2 and a coil 12a2. The magnetic biasing means 113 includes a bar core 113 with a coil 10a3 and a coil 12a3 wound thereon. The magnetic biasing means 104 includes a bar core 114 with a coil 10a4 and a coil 12a4 wound thereon.

It should be noted that the coils 10a1–10a4, inclusive, are wound in one direction around their respective bar cores whereas the coils 12a1–12a4, inclusive, are wound in the opposite direction around their respective bar cores. Thus currents applied with a predetermined polarity to the coil 10a1, for example would produce a magnetic field in a predetermined direction whereas the same current applied with the same polarity to the coil 12a1 would produce a magnetic field in the opposite direction.

With reference now to FIG. 4 the coupling factor-magnetic field characteristics of the saturable transformers S1–S4 are diagrammatically illustrated in a curve designated So. The currents which are applied to the coils wound on the bar cores may be described in terms of binary codes designated "1" or "0." Thus when a magnetic field is applied in a predetermined direction designated A and has a magnetic intensity designated a which is sufficient to reduce the coupling factor to substantially zero in the positive direction then the coil may be said to be in the "1" state. When no current flows through the coil it may be said to be in the "0" state. When the current is applied to the other coil wound on the same bar so that a magnetic field is generated in the opposite direction designated B and is of an intensity B sufficient to reduce the coupling factor of the transformer to zero in the negative direction the second coil may be said to be in the "I" state. When no current flows through the second coil it is in the "0" state.

Referring now to FIG. 5 a master key and slave key for controlling the magnetic field biasing means of the embodiment of FIG. 3 are illustrated. The master key 20 is comprised of a printed circuit card having a base board 21 made of an insulating material and having lead pairs 22a, 22c, and 22d formed on the base board 21 by a printed circuit method. The ends of the lead pairs constitute contacts. The master key 20 is inserted into a socket (not shown) having matching contacts. The contacts are arranged such that a lead pair 24a is connected between the lead pair 22a and a power source 23. A lead pair 24c from the power source is connected to the lead pair 22c and a lead pair 24d is connected from the power source to the lead pair 22d. A lead pair 24b is connected from the power source to the card but the card has no corresponding printed circuit lead pair and thus the lead pair 24b is electrically unconnected.

The lead pair 22a is also connected to the leads 10b1 and 10c1 of the coil 10a1. The leads 10b3 and 10c3 of the coil 10a3 are connected to the lead pair 22c. The leads 10b4 and 10c4 of the coil 10a4 are connected to the lead pair 22d. The leads 10b2 and 10c2 of the coil 10a2 remain unconnected to the power source. Thus when power is applied from the source 23 the coils 10a1, 10a3 and 10a4 are energized into the "1" state and the coil 10a2 is in the "0" state. At this point the system of FIG. 3 is locked because transformer S2 is the only transformer which is in the unsaturated condition and thus the high frequency current from the

source 5 is not transmitted to energize the electronic lock 9.

A slave key 25 is needed to unlock the system. The slave key 25 includes an insulator board 26 having lead pairs 27*a*, 27*c*, and 27*d* printed thereon. It is inserted in a socket (not shown) so that the lead pair 27*a* is connected to the power source 23 through a lead pair 28*a*, the lead pair 27*c* is connected to the power source 23 through a lead pair 28*c* and the lead pair 27*d* is connected to the power source 23 through a lead pair 28*d*.

The ends 12b1 and 12c1 of the coil 12a1 are connected to the lead pair 27*a*. The ends 12b2 and 12c2 of the coil 12a2 are unconnected to a lead pair on the key 25. The ends 12b3 and 12c3 of the coil 12a3 are connected to the lead pair 27*c* and the ends 12b4 and 12c4 of the coil 12a4 are connected to the lead pair 27*d*. Thus when the key 25 is inserted in the socket power is supplied from the source 23 to energize the coils 12a1, 12a3 and 12a4 so that they are in the "1" binary state and the coil 12a2 is unenergized and in the "0" state. Since the coils 10a1–10a4 are wound in the opposite direction from the coils 12a1–12a4 the respective magnetic fields cancel each other out and leave the transformers S1–S4, inclusive, unsaturated. The high frequency current is then transmitted to energize the electronic lock 9.

The arrangement of the lead pairs on the master and slave keys illustrated in FIG. 5 may be varied to give any number of combinations of coding. One advantage of the system of the invention is that the master and slave keys together provide a pre-set coding pattern but the system is not limited to this coding pattern. Any number of master and slave key pairs may be utilized in the same system. Thus if the slave key is lost the system may be provided conveniently with a new coding simply by changing the master key.

Referring now to FIG. 6 another embodiment of the invention is shown in which the alternating current source 5, the cascade connected transformers S1–S4, the output transformer 6, the SCR 7 and the electronic lock 9 are utilized as in the embodiment of FIG. 3 but a different magnetic biasing system is supplied. In FIG. 6 the binary designation "1" refers to the presence of a magnetic field sufficient to saturate the transformer and the designation "0" refers to the absence of a magnetic field.

Referring now more particularly to FIG. 7 the magnetic biasing sources 15 and 16 are shown comprising metallic strips having portions of the strips magnetized in predetermined directions. The transformers S1–S4, inclusive, are mounted on a strip 14 which is secured in a housing 13 between the metallic strips 15 and 16 which are inserted through holes in the housing 13. The transformers are located on the strip 14 at predetermined intervals.

The strip 15 has a portion 221 which is magnetized north to south from left to right as viewed in FIG. 7. The portion 221 is situated directly opposite the transformer S1 when the strip 15 is fully inserted into the casing 13. The strip 15 also has a portion 223 located directly opposite the transformer S3 and magnetized south to north from left to right as viewed in FIG. 7. The strip 15 further has a portion 224 magnetized from north to south as viewed in FIG. 7 and located directly opposite the transformer S4. The strip 15 has no magnetized portion directly opposite the transformer S2. The magnetic field supplied by the portions 221, 223 and 224 cause the transformers S1, S3 and S4 to be saturated. Thus when the key 15 is inserted in the casing 13 the system is locked.

The system may be unlocked by the insertion of the key 16 into the casing 13. The key 16 has a portion 201 magnetized south to north from left to right as viewed in FIG. 7 which is located directly opposite the transformer S1 when the key 16 is fully inserted into the casing 13. The strip 16 also has a portion 203 located directly opposite the transformer S3 which is magnetized north to south from left to right as viewed in FIG. 7. A portion 204 of the strip 16 is magnetized south to north from left to right as viewed in FIG. 7 and is located directly opposite the transformer S4. It will be noted that the magnetic polarities of the portions 201, 203 and 204 are directly opposite to the magnetic polarities of the portions 221, 223 and 224 of the strip 15. The net effect is that the magnetic fields produced at the transformers by the strips 15 and 16 cancel each other leaving the transformers S1–S4, inclusive, unsaturated and the system unlocked.

The embodiment of FIGS. 6 and 7 provides a greater degree of coding than the embodiment of FIG. 5 in that not only may the portions of the keys be magnetized or unmagnetized but they may also be magnetized in a predetermined direction. If a key having a particular portion which is magnetized is placed opposite the transformer but the magnetic polarity of the portion is the same as the magnetic polarity of the opposing magnetized portion of the master key then the transformer is merely driven further into saturation rather than being unsaturated.

A modified form of a key suitable for use in the embodiment of FIG. 7 is shown in FIG. 8 comprising a hollow rectangular tube 18 which contains a plurality of magnetic bits 17. The bits 17 are magnetized in predetermined directions and correspond to the magnetized portions of the strips 15 and 16 in their purpose. Unmagnetized spacers may be inserted between the bits 17 to provide a further element of coding ability.

In FIG. 9 still another form of key is illustrated in the form of a credit card 30 made of an insulating material 31 and having a plurality of coded magnetic bits 32 having predetermined polarities. The purpose of the card 30 is similar to the purpose of the keys 15 and 16. It is inserted in a similar structure to saturate or unsaturate the transformers S1–S4. The coding may be in the form of predetermined magnetic polarities of the bits or the presence or absence of the magnetized bits. The card 30 may further carry a photograph of the user to provide additional identification.

While in all of the above embodiments the transformers and magnetic biasing means have been shown and described as being arranged in a straight line, in other embodiments they are arranged in other patterns. It should also be apparent that any sort of electronic control device may be operated by the system and the invention is not restricted to the control of electronic locks.

The terms and expressions which have been employed here are used as terms of description and not of limitation, and there is no intention, in the use of such terms and expressions of exclusing equivalents of the features shown and described, or portions thereof, it being recognized that various modifications are possible within the scope of the invention claimed.

What is claimed is:

1. A magnetic verification system comprising a source of alternating current, control means responsive to the flow of electrical current, a plurality of saturable core transformers cascade connected between the source of alternating current and the control means, the transformers forming a circuit for normally transmitting the alternating current to the control means and for blocking the transmission of the signal to the control means when at least one of the transformers is subjected to a magnetic field of a predetermined intensity which is sufficient to magnetically saturate the one transformer, first means for supplying a first magnetic field of the predetermined intensity to at least a select one of the transformers in a predetermined direction, second means for supplying a second magnetic field of the predetermined intensity to at least the select transformer in a direction opposite to that of the first magnetic field so as to substantially cancel it with respect to the select transformer.

2. A magnetic verification system as recited in claim 1 wherein at least one of the first and second magnetic field supplying means comprises a plurality of electromagnets, each electromagnet being mounted adjacent a separate transformer, a source of direct current of intensity sufficient that when coupled to any of the electromagnets a magnetic field of the predetermined intensity is generated therein, and means for selectively coupling certain of the electromagnets to the source of direct current.

3. A magnetic verification system as recited in claim 1 wherein the first and second magnetic field supplying means comprise a plurality of bar cores, each bar core being mounted adjacent a separate transformer, a plurality of coils, each bar core having a pair of the coils wound thereon, the coils of each pair being arranged to generate magnetic fields of substantially equal intensity but in opposition to each other, a source of direct current for energizing the coils, first means for electrically connecting one of the coils from select coil pairs to the direct current source, and second means for electrically connecting the opposite coil of the select coil pairs to the direct current source.

4. A magnetic verification system as recited in claim 1 wherein the control means includes an electronic lock operated in response to the alternating current.

5. A magnetic verification system as recited in claim 1 wherein at least one of the first and the second magnetic field supplying means includes a strip bearing portions of permanently magnetized material.

6. A magnetic verification system as recited in claim 1 comprising a housing, a frame positioned in the housing for mounting the transformers in a predetermined pattern, the first magnetic field supplying means including a first strip insertable in the housing adjacent to the frame, the first strip having portions permanently magnetized in predetermined directions and having the predetermined magnetic field intensity, each portion of the first strip being aligned with and spaced from a separate transformer, a second strip insertable in the housing adjacent to the frame, the second strip having portions permanently magnetized in directions which are opposite to the directions in which the portions of the first strip are magnetized and having the predetermined magnetic field intensity, each portion of the second strip being aligned with and opposed to a magnetized portion of the first strip such that the intensity of the net magnetic field asserted by the portions of the two strips on each transformer is less than the predetermined intensity.

7. A magnetic verification system as recited in claim 6 wherein at least one of the first and second strips comprises a hollow tube and a plurality of permanently magnetized bits insertable into the hollow tube, the relative dimensions of the hollow tube interior and the exterior of the bits being such that the bits are held within the tube in a pattern determined by their order of insertion into the tube.

8. A magnetic verification system as recited in claim 6 wherein at least one of the first and second strips comprises a card having permanently magnetized portions, the card further having additional physical features to identify the user of the card.

* * * * *

UNITED STATES PATENT OFFICE

CERTIFICATE OF CORRECTION

Patent No. 3,744,027 Dated July 3, 1973

Inventor(s) Saburo Uemura , Muneo Iwamoto

It is certified that error appears in the above-identified patent and that said Letters Patent are hereby corrected as shown below:

IN THE HEADING

Under Foreign Application Priority Data

change "46/1154" to --11554/71--.

Signed and sealed this 12th day of November 1974.

(SEAL)
Attest:

McCOY M. GIBSON JR.
Attesting Officer

C. MARSHALL DANN
Commissioner of Patents

USCOMM-DC 60376-P69
☆ U.S. GOVERNMENT PRINTING OFFICE : 1969 O—366-334.