G. W. WEBER.

DETACHABLE SPOUT FOR SHIPPING CANS.

APPLICATION FILED JUNE 29, 1907.

927,617. **Patented July 13, 1909.**

Fig. 1

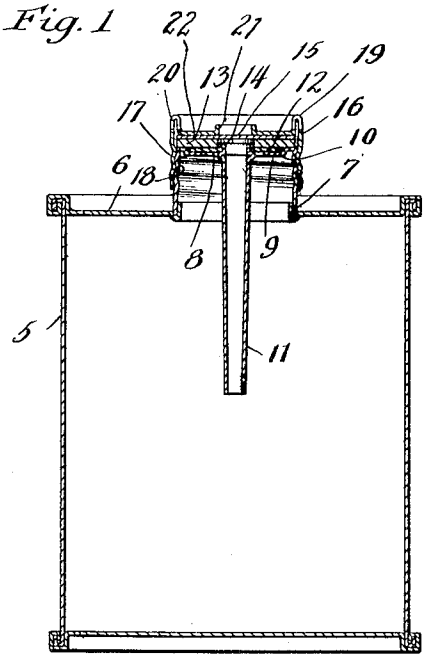

Fig. 2

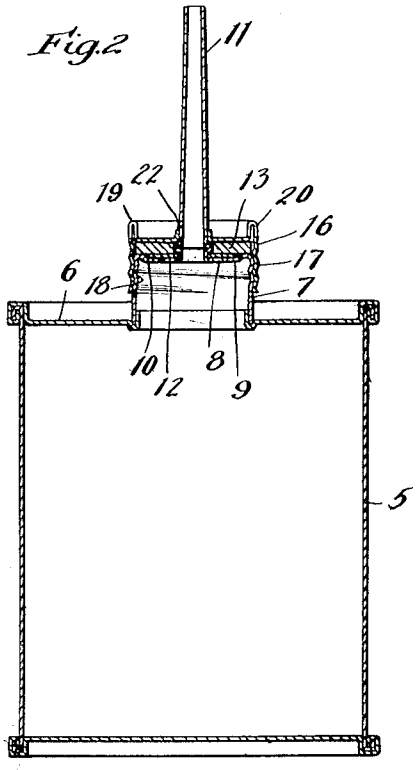

Fig. 3

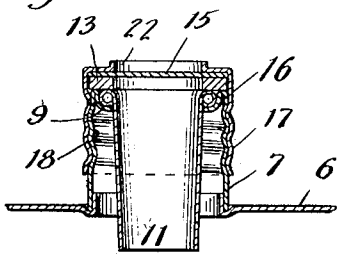

Fig. 4

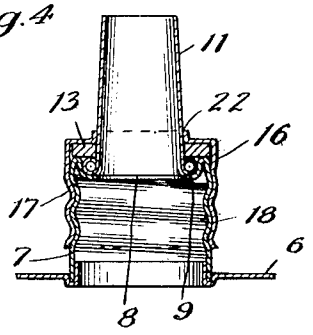

Witnesses:

Wm. Geiger

Chas. Abrams

Inventor:

George W. Weber

By Munday, Evarts, Adcock & Clarke

Attorneys

UNITED STATES PATENT OFFICE.

GEORGE W. WEBER, OF NEW YORK, N. Y., ASSIGNOR TO AMERICAN CAN COMPANY, OF NEW YORK, N. Y., A CORPORATION OF NEW JERSEY.

DETACHABLE SPOUT FOR SHIPPING-CANS.

No. 927,617. Specification of Letters Patent. Patented July 13, 1909.

Application filed June 29, 1907. Serial No. 381,499.

To all whom it may concern:

Be it known that I, GEORGE W. WEBER, a citizen of the United States, residing in New York, in the county of New York and State of New York, have invented a new and useful Improvement in Detachable Spouts for Shipping-Cans, of which the following is a specification.

My invention relates to shipping cans having nozzle spouts.

The object of my invention is to provide a detachable spout for shipping cans of a simple, efficient and durable construction, which may be securely sealed or closed for shipment or storage, in which the spout of the nozzle may project out of the way inside the can when it is sealed or closed for shipment or storage, and in which the spout will be held firmly and rigidly in place when the spout is desired for use.

My invention consists in the means I employ to practically accomplish this object or result, as herein shown and described, the same being more particularly specified in the claims.

In the accompanying drawing, forming a part of this specification, Figure 1 is a sectional view of a detachable spout for shipping cans embodying my invention, showing the can closed or sealed and the spout projecting out of the way inside the can; Fig. 2 is a similar view showing the spout extended for use; Figs. 3 and 4 are similar sectional views illustrating a modification.

In the drawing 5 represents the can, having its top head 6 furnished with an inverted screw threaded nozzle piece 7 soldered or otherwise secured thereto, and having a central opening 8 in its disk part 9, and an external countersink or recess 10 also therein.

11 is a separate piece spout, having a base flange 12, preferably disk-like, as shown in Figs. 1 and 2, and fitting in the countersink 10 of the nozzle piece 7.

13 is a sealing gasket or washer, preferably of cork or like material, and having a central opening 14 therein, through which the spout may project when the same is extended or upright.

15 is a metal closing disk, preferably flat, fitting on top of the sealing disk when the can is closed or sealed.

16 is a removable screw cap having internal screw threads 17 engaging the external screw threads 18 on the fixed nozzle piece 7. The movable threaded nozzle cap 16 has an integral upwardly projecting double wall or folded rim 19, furnished with diametric slots or notches 20 therein for unscrewing the nozzle. This cap is also provided with a central hole 21 through its top portion 22 for the spout to project through when the same is extended.

When the can is sealed or closed, the closing disk is inserted between the removable screw cap and the sealing disk, and is clamped with the sealing disk between the screw cap and the fixed screw threaded nozzle piece on the can, thus producing a tight and secure closure, the spout of the nozzle at this time projecting inside the can out of the way.

When the spout is extended for use, as shown in Fig. 2, the closing disk is removed, and the spout projects through the central opening in the removable screw cap, and its base or flange is firmly clamped between the removable screw cap and the fixed nozzle piece of the can, thus holding the spout very firmly and rigidly in place. The sealing disk at this time produces a tight closure between the fixed nozzle piece and the removable screw cap, so that the only escape for the contents of the can is through the spout.

In the modification illustrated in Figs. 3 and 4, the base flange of the nozzle is curved into a roll, and the external countersink or recess in the top portion of the nozzle piece is correspondingly shaped to fit the curved or roll form of the spout base. In this modification the rolled or curved spout base is made in one piece with the spout. In the construction shown in Figs. 1 and 2 the base of the spout is preferably in a separate piece, and soldered or seamed thereto.

I claim:

1. The shipping can having detachable spout, comprising a can furnished with a fixed nozzle piece having a top portion provided with an opening and an external countersink, a removable screw cap having an opening in its top or disk portion, a sealing disk having an opening therein, a closing disk, and a separate reversible spout having a base fitting in and directly against the countersink of said fixed nozzle piece and clamped between the screw cap and nozzle piece, said sealing disk and closing disk being between the base of said spout piece and said screw cap, substantially as specified.

2. The shipping can having detachable spout, comprising a can furnished with a fixed nozzle piece having a top portion provided with an opening and an external countersink, a removable screw cap having an opening in its top or disk portion, a sealing disk having an opening therein, a closing disk, and a separate reversible spout having a base fitting in and directly against the countersink of said fixed nozzle piece and clamped between the screw cap and nozzle piece, said screw cap having an upwardly projecting slotted rim for unscrewing the same, said sealing disk and closing disk being between the base of said spout piece and said screw cap, substantially as specified.

3. In a can, the combination with a fixed screw nozzle piece having an opening therein, of a removable screw cap having an opening therein, and a removable spout having a base fitting directly against said nozzle piece and clamped between said nozzle piece and screw cap, a sealing disk between the screw cap and the base of said spout, substantially as specified.

4. In a can, the combination with a fixed screw nozzle piece having an opening therein, of a removable screw cap having an opening therein, a removable spout having a base fitting directly against said nozzle piece and clamped between said nozzle piece and screw cap, a sealing disk between the screw cap and the base of said spout and a clamp disk also between said nozzle piece and screw cap, substantially as specified.

5. In a can, the combination with a fixed screw nozzle piece having an opening therein, of a removable screw cap having an opening therein, and a removable spout having a base fitting directly against said nozzle piece and clamped between said nozzle piece and screw cap, a sealing disk between the screw cap and the base of said spout, said screw cap having an upwardly projecting slotted rim, substantially as specified.

6. In a can, the combination with a fixed screw nozzle piece having an opening therein, of a removable screw cap having an opening therein, and a removable spout having a base fitting directly against said nozzle piece and clamped between said nozzle piece and screw cap, a sealing disk between the screw cap and the base of said spout, said nozzle piece having an external countersink in its top portion to receive the base of said spout, substantially as specified.

7. In a can, the combination of a screw nozzle piece with a screw cap, and a reversible spout having a base fitting directly against said nozzle piece and clamped between said nozzle piece and screw cap, a sealing disk between the screw cap and the base of said spout, substantially as specified.

8. In a can, the combination of a screw nozzle piece with a screw cap, and a reversible spout having a base fitting directly against said nozzle piece and clamped between said nozzle piece and screw cap, a sealing disk between the screw cap and the base of said spout, said nozzle piece and screw cap having openings for the spout to project through, substantially as specified.

9. In a can, the combination of a screw nozzle piece with a screw cap, a reversible spout having a base fitting directly against said nozzle piece and clamped between said nozzle piece and screw cap, said nozzle piece and screw cap having openings for the spout to project through, and a sealing means between said screw cap and nozzle piece, substantially as specified.

GEORGE W. WEBER.

Witnesses:
EDMUND ADCOCK,
H. M. MUNDAY.