Dec. 20, 1955 J. W. PRESTON 2,727,541

WIRE TWISTING APPARATUS

Filed Feb. 1, 1952

2 Sheets-Sheet 1

FIG. 1.

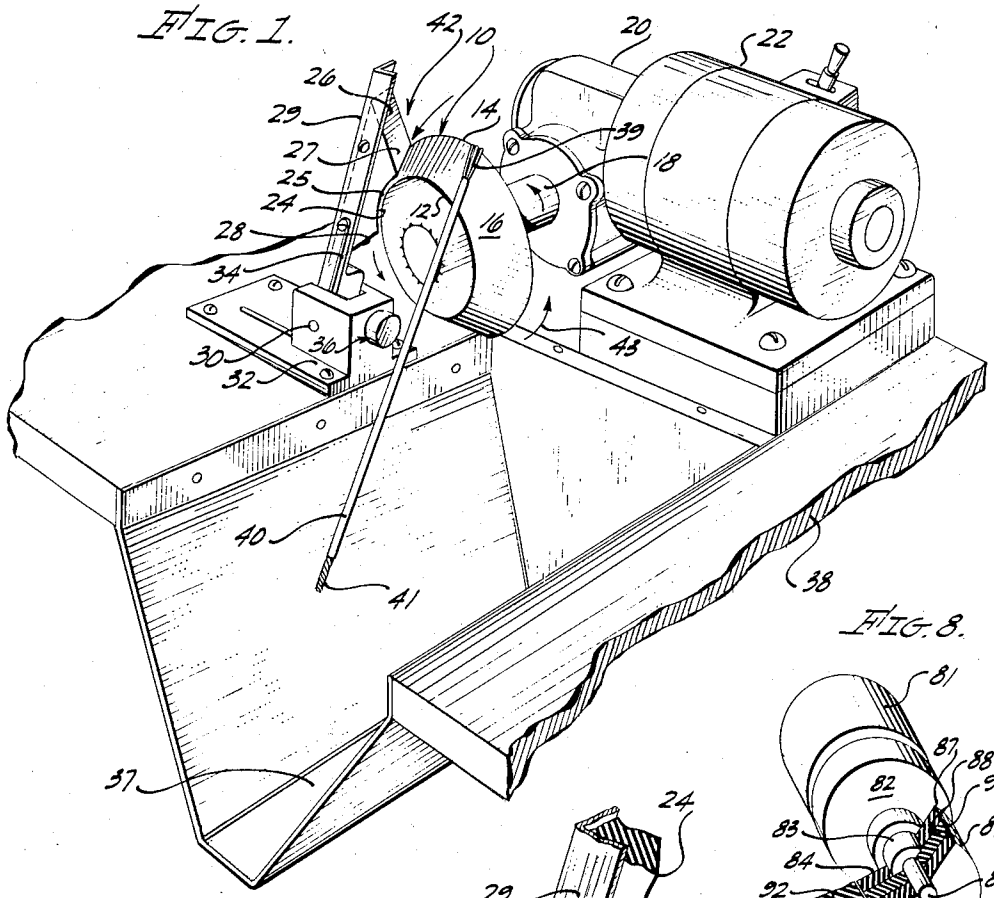

FIG. 8.

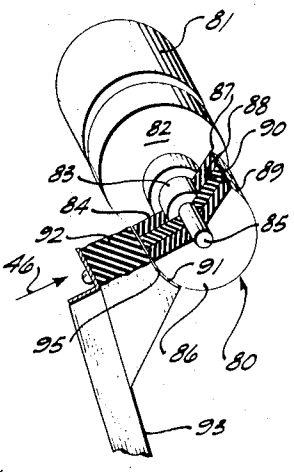

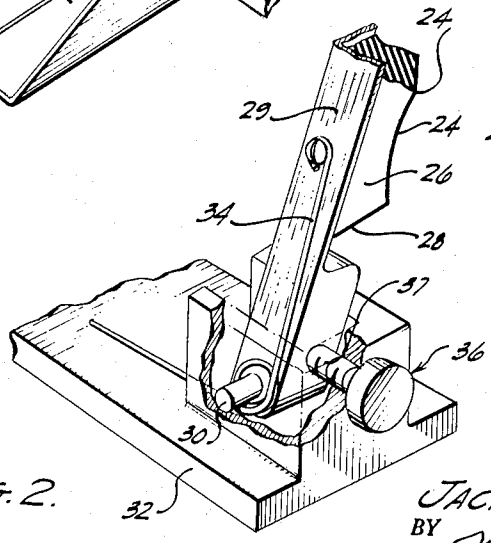

FIG. 2.

INVENTOR.
JACK W. PRESTON,
BY Nicholas T Vohk
ATTORNEY.

Dec. 20, 1955 J. W. PRESTON 2,727,541

WIRE TWISTING APPARATUS

Filed Feb. 1, 1952

2 Sheets-Sheet 2

FIG. 3.

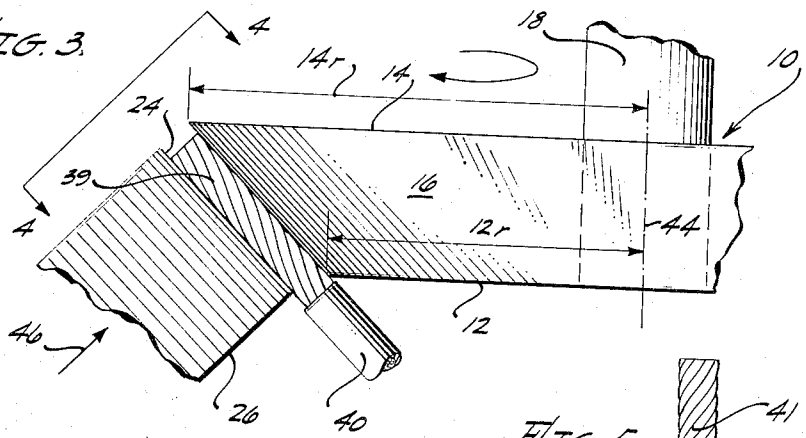

FIG. 4.

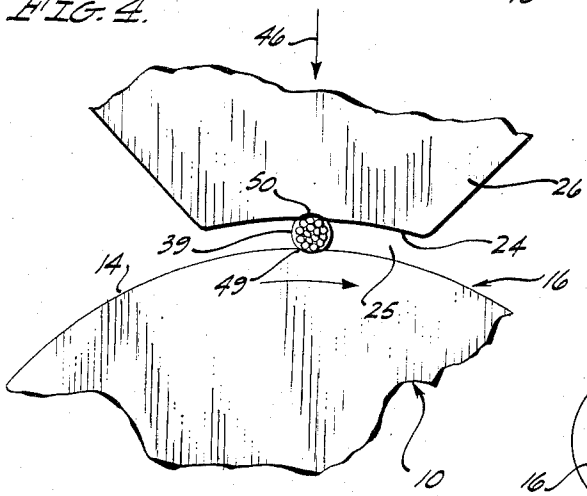

FIG. 5.

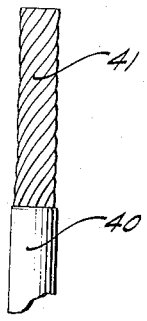

FIG. 7.

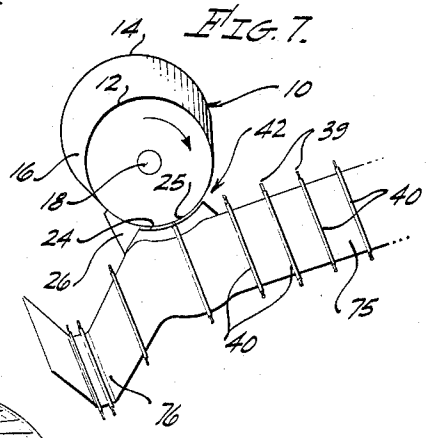

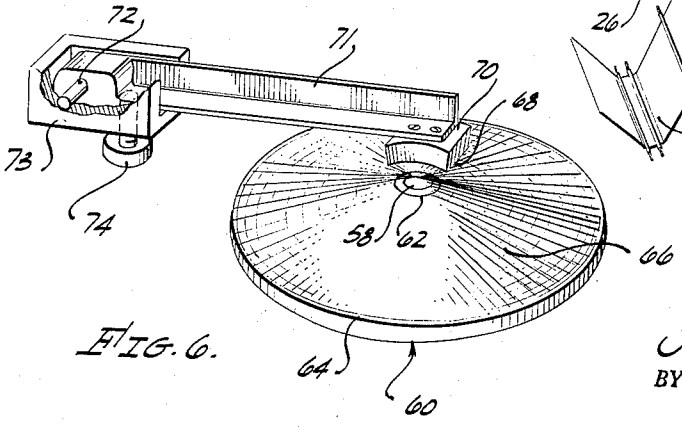

FIG. 6.

INVENTOR.
JACK W. PRESTON,
BY Nicholas T Volak
ATTORNEY.

United States Patent Office 2,727,541
Patented Dec. 20, 1955

2,727,541

WIRE TWISTING APPARATUS

Jack W. Preston, Van Nuys, Calif., assignor, by mesne assignments, to Hughes Aircraft Company, a corporation of Delaware

Application February 1, 1952, Serial No. 269,533

8 Claims. (Cl. 140—149)

This invention relates to apparatus for twisting a predetermined length of stranded wire, and more particularly to apparatus for twisting the ends of stranded electrical conductors from which the insulation has been stripped.

It is customary to twist the ends of stranded wire to prevent the strands from spreading or becoming frayed during subsequent handling after the wire has been cut. This is especially true of insulated electrical conductors that are cut to length and stripped of insulation to expose a sufficient length of bare wire for making appropriate electrical connections. Ordinarily the process of stripping insulation from the ends of stranded wire causes the strands to separate and open the bundle. In this condition, the individual strands are easily spread from the bundle to become damaged in later handling.

Twisting the strands into a tight bundle, before binding them with solder, is most commonly performed as a manual operation, which includes holding the cut length of wire in one hand, then gripping and rolling the bare strands between the thumb and forefinger of the other hand. Even with the most skilled operators, this manual operation is slow and expensive, and produces non-uniform results.

The apparatus embodying this invention performs the operation of twisting a selected length of stranded wire by applying the twisting action in a manner comparable to the manual operation previously described. In other words, the apparatus actually lays the outside strands of the wire into a short twist to adequately bind the wires into a tight bundle. However, with the apparatus of this invention, the operation may be performed rapidly and efficiently, and with uniform results.

Accordingly, it is an object of this invention to provide apparatus for twisting a predetermined length of stranded wire by simultaneously subjecting axially adjacent portions of the predetermined length to the forces of rolling friction.

It is another object to provide an apparatus for twisting a predetermined length of stranded wire by forcibly rolling axially adjacent portions of the predetermined length at different angular velocities.

It is a further object to provide a device for twisting the bare ends of stranded wire conductors by applying the forces of conic rolling to the ends of the wire.

It is another object to provide a device for twisting a predetermined length of stranded wire by forcibly rolling the predetermined length between complementary traction and driving surfaces.

It is a further object to provide such a device in which the complementary surfaces are parallel single-curved surfaces.

It is a further object to provide such a device in which the parallel single-curved surfaces are coaxial conical surfaces.

It is also an object to provide such a device in which one of the conical surfaces is rotatable with respect to another conical surface.

It is a further object to provide such a device in which the complementary traction and driving surfaces are coaxial cylindrical surfaces.

It is an additional object to provide such a device in which the cylindrical driving surfaces includes two or more transverse portions which revolve at different velocities.

The novel features which are believed to be characteristic of the invention, both as to its organization and method of operation, together with further objects and advantages thereof, will be better understood from the following description considered in connection with the accompanying drawings in which several embodiments of the invention are illustrated by way of examples. It is to be expressly understood, however, that the drawings are for the purpose of illustration and description only, and are not intended as a definition of the limits of the invention.

Fig. 1 is a perspective view of a wire twisting apparatus embodying the invention;

Fig. 2 is an enlarged perspective view of the yieldable support in Fig. 1;

Fig. 3 is a plan view of the complementary traction and driving members used in Fig. 1, illustrating the principles of conic rolling applied to the bare end of an insulated stranded conductor wire;

Fig. 4 is an elevation taken on line 4—4, Fig. 3;

Fig. 5 is an enlarged view of a predetermined length of stranded electrical conductor wire illustrating the twist imparted to the strands thereof;

Fig. 6 is a modification of the embodiment illustrated in Fig. 1;

Fig. 7 is a schematic illustration of the embodiment of Fig. 1 adapted for continuous or automatic operation; and

Fig. 8 is an oblique view of another embodiment of the invention.

Referring now to the drawings, there is shown in Fig. 1 one embodiment of this invention, which includes a driving member **10** having a driving surface **16**. Driving member **10** is in the form of a right circular cone having a minor perimeter **12** and a major perimeter **14** which define a convex conic section forming driving surface **16**. Driving member **10** and driving surface **16** are driven by a drive motor **22** through an intermediate drive shaft **18** on which member **10** is fixedly mounted, and a speed reducer **20** coupled between motor **22** and drive shaft **18**.

Positioned adjacent to driving member **10** is a traction member **26** having a traction surface **24** in the form of a concave conic section complementary to the convex conic section forming driving surface **16**. Member **26** is yieldably supported on a block **32** by means of an arm **29** pivoted on a pin **30** mounted in block **32**. Traction surface **24** is normally urged into contact with driving surface **16** by means of a torsion spring **34**.

To prevent actual contact between driving surface **16** and traction surface **24**, an adjustable stop **36** is provided to limit the travel of arm **29** toward driving member **10**. As shown in Fig. 2, stop **36** has a shank **37** threaded through a tapped hole, not designated, in the body of block **32**, so that shank **37** engages arm **29** above pin **30**. Stop **36** may be adjusted to adjust the predetermined space **25** between driving surface **16** and traction surface **24** in order to accommodate different sizes of stranded wires. As shown in Fig. 1, driving surface **16** and the leading edge **27** of traction member **26** form a V-shaped notch, generally designated by arrow **42**, which provides an entrance for the wire to space **25**.

The operation of twisting a predetermined length of stranded wire, such as stripped end **39** of insulated conductor **40**, may be summarized as follows: End **39**, comprising a bundle of loose strands, is placed in V-shaped notch **42** where driving surface **16**, rotating in the direction of arrow **43**, forces end **39** into space

25 forcibly rolling the strands over traction surface 24 until they reach trailing edge 28 of traction member 26. At this point, the loose bundle of strands forming the end of the wire drops from engagement with the driving and traction surfaces as a tightly twisted bundle represented by end 41 of conductor 40. The operator loosely holds conductor 40 while first one end and then the other is rolled between surfaces 16 and 24, after which conductor 40 is dropped into a bin 37 for accumulation with others of like nature.

To obtain the desired rolling action of the wire, driving member 10 and traction member 26 are preferably made of elastic material for providing elasticity to surfaces 16 and 24 of the quality characteristic of vulcanized rubber. Vulcanized rubber compounds as well as several rubber substitutes are ideally suited for this purpose, since a variety of driving members and traction members having different degrees of elasticity can be provided to meet different wire twisting requirements.

Reference is now made to Figs. 3 and 4 in order to explain more fully the twisting action applied to the ends of stranded conductor 40. Fig. 3 is an enlarged plan view of traction member 26 and driving member 10 illustrating minor perimeter 12 and major perimeter 14 in terms of their radii 12*r* and 14*r*, respectively, from the axis 44 of rotation of shaft 18 and driving member 10. When shaft 18 is revolved, radii 12*r* and 14*r* revolve with the shaft at the same angular velocity, and, therefore, all points on perimeters 12 and 14 revolve at the same angular velocity. However, since radius 14*r* is longer than radius 12*r*, the arc traversed by radius 14*r* will be longer than the arc traversed by radius 12*r*. Therefore, the linear velocity of each point on perimeter 14 will be greater than the linear velocity of each point on perimeter 12. Since both perimeters define the boundaries of surface 16, it follows that adjacent transverse portions of surface 16 will move at different linear velocities when shaft 18 rotates member 10.

Since, as previously described in connection with Figs. 1 and 2, spring 34 applies a force to traction member 26 urging traction surface 24 into spaced relationship with driving surface 16, this force, represented by arrow 46 in Figs. 3 and 4, applies pressure to the bare end 39 of stranded conductor 40. In this manner the forces of rolling friction are applied to the strands in contact with the traction and driving surfaces. Because of this force and the elasticity of members 10 and 26, end 39 of conductor 40 deforms surfaces 16 and 24, as at 49 and 50 in Fig. 4. Such deformation of the two surfaces occurs progressively as the conductor moves through space 25 between them. Furthermore, such deformation is not permanent or lingering, because the elasticity of the material permits surfaces 16 and 24 to recover their normal shape as the conductor progresses in its movement through space 25. In other words, as the conductor rolls over these surfaces, there is a progressive gripping and releasing action between each surface and the wire.

Because of the gripping action just described, and the different linear velocities of adjacent transverse portions of surface 16, when member 10 is rotated, axially adjacent portions of end 39 of conductor 40 will be forcibly rolled over surface 24 at different linear velocities. Since the effective diameter of the bare end of the conductor is uniform, rolling axially adjacent portions thereof at different linear velocities will effectively roll the conductor at different angular velocities and produce a twist to the strands as clearly shown at 41 in Fig. 5.

A modification of the wire twisting apparatus of Fig. 1 is illustrated in Fig. 6, the difference between the two apparatuses residing in the difference between their driving members and the means for yieldably supporting the traction member. In Fig. 6, a driving member 60 is mounted on a shaft 58 extending from a motorized speed reducer (not shown), member 60 having a minor perimeter 62 and a major perimeter 64 which define a conical convex driving surface 66. Owing to the marked difference between major and minor perimeters 64 and 62, respectively, driving surface 66 is substantially a right circular cone with the included angle closely approaching 180°.

Positioned adjacent driving member 60 is a traction member 70 having a segmentary concave conical traction surface 68 complementary to convex conical driving surface 66. Member 70 is yieldably supported by an arm 71 pivoted on a pin 72 mounted in a block 73 which is attachable to a framework (not shown) along with the motorized speed reducer (not shown). The force of gravity acting on arm 71 normally urges traction surface 68 into contact with driving surface 66. To prevent actual contact between the traction and driving surfaces and to obtain a predetermined spaced relationship between the surfaces, an adjustable stop 74, similar to stop 36, is provided to limit the travel of arm 71 toward driving member 60.

Because of the similarity between the operation of the apparatus illustrated in Fig. 6 and the apparatus illustrated in Fig. 1, reference is made to the descriptions relating to materials of construction and the cooperative wire twisting functions of driving member 10 with its driving surface 16 and traction member 26 with its traction surface 24, which descriptions apply equally well to driving member 60 with its driving surface 66, and traction member 70 with its traction surface 68.

In the two embodiments of this invention thus far described, the operator holds the conductor to be twisted until the twisting operation is completed. It should be apparent, however, that the twisting operation of this invention may be performed automatically, without the assistance of the operator. For example, in Fig. 7, the driving and traction members of the apparatus illustrated in Fig. 1, are included in an apparatus shown schematically for performing the twisting operation without holding the conductor.

In Fig. 7, conductors 40 are placed on an inclined surface 75 in spaced relationship to each other, depending upon the rotational speed of driving member 10, and as the conductors roll down the incline, stripped bare ends 39 enter space 25 between driving surface 16 and traction surface 24 by way of notch 42. Driving member 10, being driven in the direction of the arrow by a motorized speed reducer (not shown), moves end 39 through space 25 after which conductor 40 falls into a trough or bin 76 to accumulate with other conductors which have already been twisted. While conductors 40 may be manually placed on inclined surface 75, any one of several well-known hopper designs having automatic releasing means may be used to place conductors in suitable position and in proper timed sequence for entry in space 25 between the driving and traction surfaces.

Referring now to Fig. 8, there is shown another embodiment of this invention in which the driving member includes a plurality of elements driven at different angular velocities as well as at different linear velocities. In Fig. 8, a composite driving member 80 includes two independent driving discs or elements 84 and 86 having convex cylindrical driving surfaces 87 and 89, respectively. Element 84 is mounted on and keyed to a cylindrical sleeve 83, while element 86 is mounted on and keyed to a shaft 85 concentric with and extending through sleeve 83.

Sleeve 83 and shaft 85 are coupled to a drive motor 81 through a differential speed reducer 82 which includes any suitable differential gearing for simultaneously rotating the sleeve and the shaft at different angular velocities. The ratio between the angular velocities of sleeve 83 and shaft 85 may be varied, by changing the gears within speed reducer 82, to thereby vary the ratio between the linear velocities of driving surfaces 87 and 89. For example, if the diameters of elements 84 and 86 are equal,

the ratio between the angular velocities of sleeve **83** and shaft **85** should be the same as the ratio of the lengths of radii **14***r* and **12***r*, in order that the apparatus of Fig. 8 produce the same twisting effect as the apparatus of Fig. 1.

Driving member **80** further includes a third disc or element **88** rotatably mounted on shaft **85** between elements **84** and **86**. Element **88** has a convex cylindrical driving surface **90**, and a diameter equal to the diameters of elements **84** and **86**.

The traction member **92** of Fig. 8 includes a concave cylindrical traction surface **91** complementary and equal in width to the composite driving surfaces **87**, **89** and **90** of driving member **80**. Traction member **92** is supported on an arm **93**, and is normally urged into contact with driving member **80** by means of a torsion spring (not shown) similar to torsion spring **34** of Fig. 1. In order to prevent actual contact between the traction and driving surfaces and to insure the desired predetermined space **95** therebetween, a stop (not shown), similar to stop **36** of Fig. 1, is employed.

The twisting action on a predetermined length of stranded conductor wire performed by the apparatus illustrated in Fig. 8 is similar to the twisting action performed by the apparatus illustrated in the other figures. In Fig. 8, force **46** urges traction surface **91** into spaced relationship with driving surfaces **87**, **89** and **90** of driving elements **84**, **88** and **86**, respectively. Therefore, when a bare wire of proper length is inserted in space **95**, pressure is applied by force **46** to the wire in a manner previously described for end **39** of conductor **40**. In Fig. 8, however, the traction and driving surfaces are cylindrical and not conical, but the twisting action is performed in a similar manner. In Fig. 3, perimeters **12** and **14** revolve at the same angular velocity, but different linear velocities; while in Fig. 8, driving surfaces **87** and **89**, having equal and uniform perimeters revolve at different angular velocities producing different linear velocities for the driving surfaces.

The angular velocity of sleeve **83** is preferably greater than the angular velocity of shaft **85**, and for this reason, the linear velocity of driving surface **87** of element **84** is greater than the linear velocity of driving surface **89** of element **86**. Since the traction and all the driving surfaces are formed on material possessing elasticity for developing a maximum coefficient of adhesion to provide a gripping action, it follows that this gripping action, in combination with the difference in linear velocities of drving surfaces **87** and **89** will forcibly roll axially adjacent portions of the bare wire over surface **91** at different linear velocities. Because the effective diameter of the bare wire is uniform, rolling axially adjacent portions thereof at different linear velocities will effectively roll the wire at different angular velocities and produce a twist to the strands as previously set forth in describing Figs. 3, 4 and 5.

Element **88**, freely rotatable on shaft **85**, provides pressure to the length of wire between driving elements **84** and **86** during the twisting operation while the wire is forcibly rolled over surface **91**. It, therefore, becomes an effective means for controlling that portion of the wire in between driving surfaces **87** and **89**.

What is claimed as new is:

1. Apparatus for twisting a predetermined length of stranded wire, said apparatus comprising: a first member having a traction surface; a second member having a driving surface for cooperation with said traction surface, said driving surface having adjacent transverse portions movable at different linear velocities with respect to said traction surface; first means yieldably supporting said first member for yieldably holding the traction surface thereof in spaced opposition with the driving surface of said second member; second means supporting said second member, said second means including a motor for moving the driving surface of said second member for forcibly rolling axially adjacent portions of the predetermined length of stranded wire at different angular velocities over the traction surface of said first member when said length of wire is placed between the traction and driving surfaces of said first and second members, respectively; said first means constituting means for applying pressure to said wire as said wire passes between said traction and driving surfaces.

2. A combination as defined in claim 1 in which said first and second members include elastic portions to provide elasticity to their respective traction and driving surfaces for applying the forces of rolling friction at different angular velocities to axially adjacent portions of the predetermined length of stranded wire.

3. Apparatus for twisting a predetermined length of stranded wire, said apparatus comprising: a first member rotatable about a fixed axis, said first member having a single-curved convex driving surface coaxially disposed with respect to said fixed axis, said driving surface having adjacent transverse portions rotatable at different linear velocities when said first member is rotated; a second member having a single-curved concave traction surface for cooperation with said driving surface, said traction surface being complementary to the convex driving surface of said first member; a yieldable support for said second member, said support normally urging the concave traction surface of said second member into spaced opposition with the convex driving surface of said first member; and means for rotating said first member to rotate the convex driving surface thereof, whereby axially adjacent portions of the length of stranded wire are forcibly rolled by said driving surface at different angular velocities over the traction surface of said second member when the length of wire is placed between said driving and traction surfaces.

4. The apparatus defined in claim 3 in which said first member includes a conical portion having a single-curved surface constituting said driving surface; and in which the traction surface of said second member matches the curved surface of said conical portion.

5. The apparatus defined in claim 4 in which said first and second members include elastic portions to provide elasticity to their respective driving and traction surfaces for applying the forces of rolling friction at different angular velocities to axially adjacent portions of said length of stranded wire.

6. Apparatus for twisting a predetermined length of stranded wire, said apparatus comprising: a first member including a plurality of driving elements mounted in tandem for simultaneous rotation about a fixed axis, each of said driving elements having a convex cylindrical driving surface; a second member having a concave traction surface for cooperation with the driving surfaces of said driving elements, said traction surface being complementary to the convex cylindrical driving surfaces of said driving elements; a yieldable support for said second member, said support normally urging the concave traction surface of said second member into spaced opposition substantially parallel with the convex driving surfaces of said driving elements; and means for simultaneously rotating said driving elements in the same direction about said axis at different angular velocities for forcibly rolling axially adjacent portions of the predetermined length of stranded wire at different angular velocities over the traction surface of said second member when the predetermined length of wire is placed between the traction surface and the driving surfaces.

7. Apparatus for twisting a predetermined length of stranded wire, said apparatus comprising: a first member having a traction surface; a second member having a driving surface for cooperation with said traction surface, said driving surface having adjacent transverse portions movable at different linear velocities; means connected to said members for yieldably supporting said surfaces in predetermined spaced opposition with respect to each other to permit the predetermined length of

wire to be placed between said surfaces; and means for driving said driving surface for rolling axially adjacent portions of said wire at different angular velocities over said traction surface.

8. In apparatus for twisting a predetermined length of stranded wire, the combination comprising: a first member having a first elastic friction surface; a second elastic friction member having a second surface positioned in predetermined spaced opposition substantially parallel to said first surface to permit the predetermined length of wire to be placed between said first and second surfaces, said second surface having adjacent transverse portions movable at different linear velocities for forcibly rolling axially adjacent portions of the predetermined length of wire at different angular velocities over said first surface when the predetermined length of wire is placed between said first and second surfaces; and means for driving said second member such that the adjacent transverse portions of the second surface move at different linear velocities with respect to each other and with respect to the first surface.

References Cited in the file of this patent

UNITED STATES PATENTS

72,388	Gissinger	Dec. 17, 1867
1,612,564	Brenzinger	Dec. 28, 1926
1,674,112	Hering	June 19, 1928
1,863,223	Kantor	June 14, 1932
2,124,618	Johnson	July 26, 1938
2,472,510	Bennett	June 7, 1949