United States Patent [19]

Klamer

[11] **Patent Number: Des. 289,074**

[45] **Date of Patent: ** Mar. 31, 1987**

[54] **ROLLER SKATE**

[75] Inventor: **Reuben B. Klamer,** Los Angeles, Calif.

[73] Assignee: **The Quaker Oats Company,** Chicago, Ill.

[**] Term: **14 Years**

[21] Appl. No.: **862,422**

[22] Filed: **May 7, 1986**

Related U.S. Application Data

[62] Division of Ser. No. 547,648, Nov. 1, 1983.

[52] **U.S. Cl.** **D21/226**

[58] **Field of Search** D21/226, 227; 280/11.12, 11.19, 11.20, 11.27, 11.28

[56] **References Cited**

U.S. PATENT DOCUMENTS

D. 106,323	10/1937	Norman	D21/226
D. 180,333	5/1957	Jones et al.	D21/226
D. 191,363	9/1961	Williams	D21/226

Primary Examiner—Charles A. Rademaker
Attorney, Agent, or Firm—Cushman, Darby & Cushman

[57] **CLAIM**

The ornamental design for a roller skate, as shown and described.

DESCRIPTION

FIG. **1** is a top plan view of a roller skate showing my new design.
FIG. **2** is a left side elevational view thereof;
FIG. **3** is a bottom plan view thereof;
FIG. **4** is a rear elevational view thereof;
FIG. **5** is a right side elevational view thereof;
FIG. **6** is a front elevational view thereof.

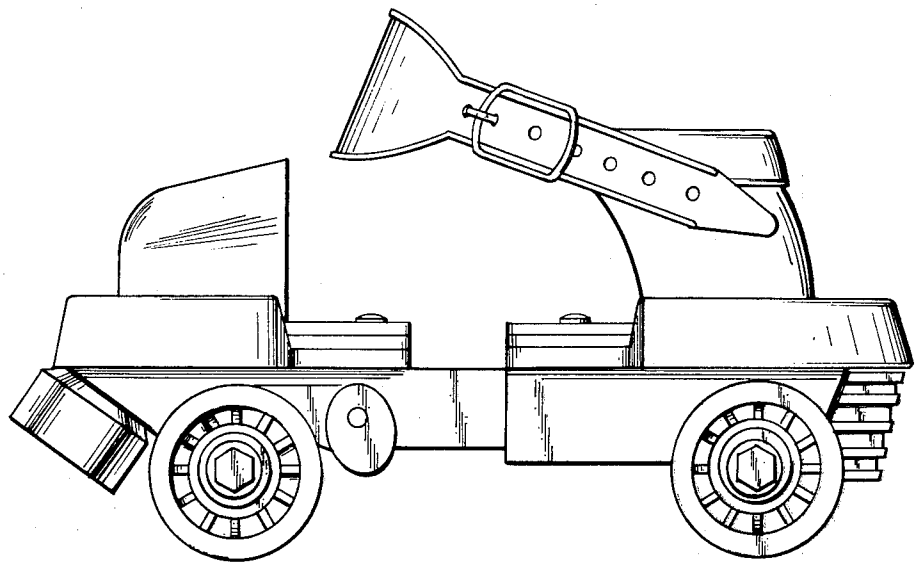

Fig. 1

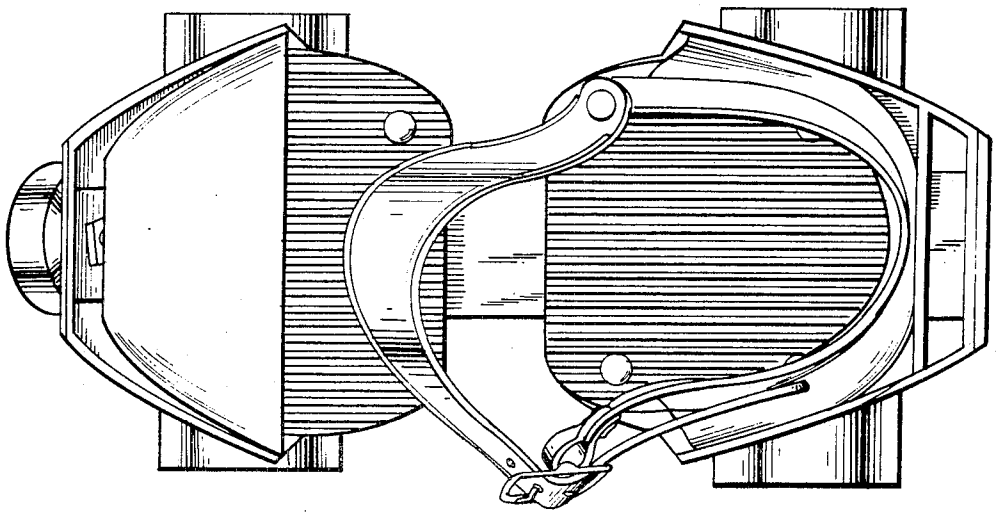

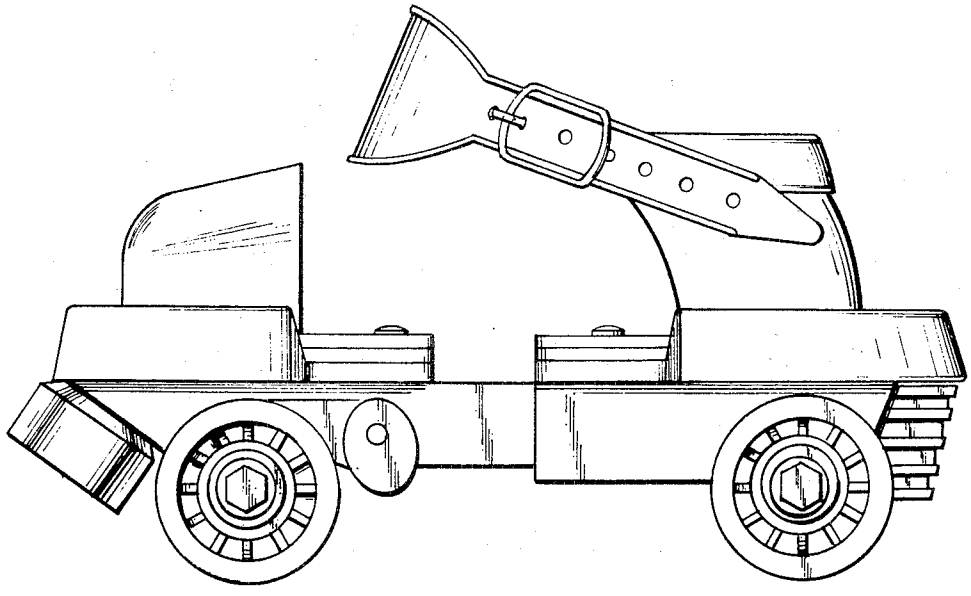

Fig. 2

Fig. 3

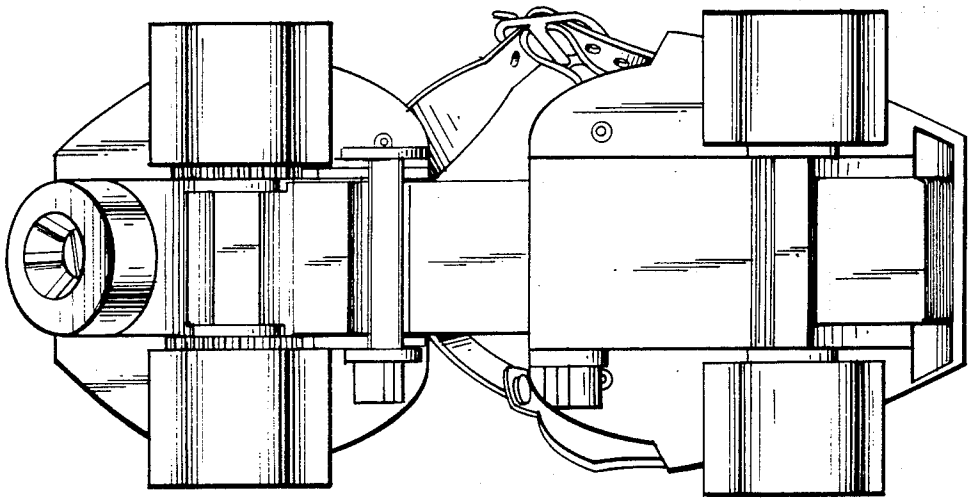

Fig. 4

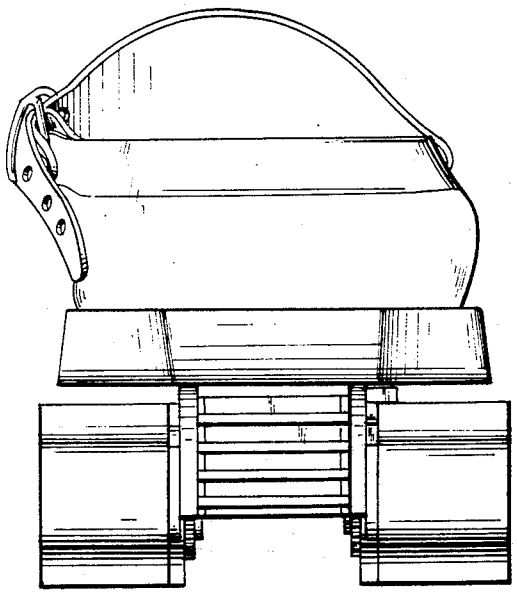

Fig. 5

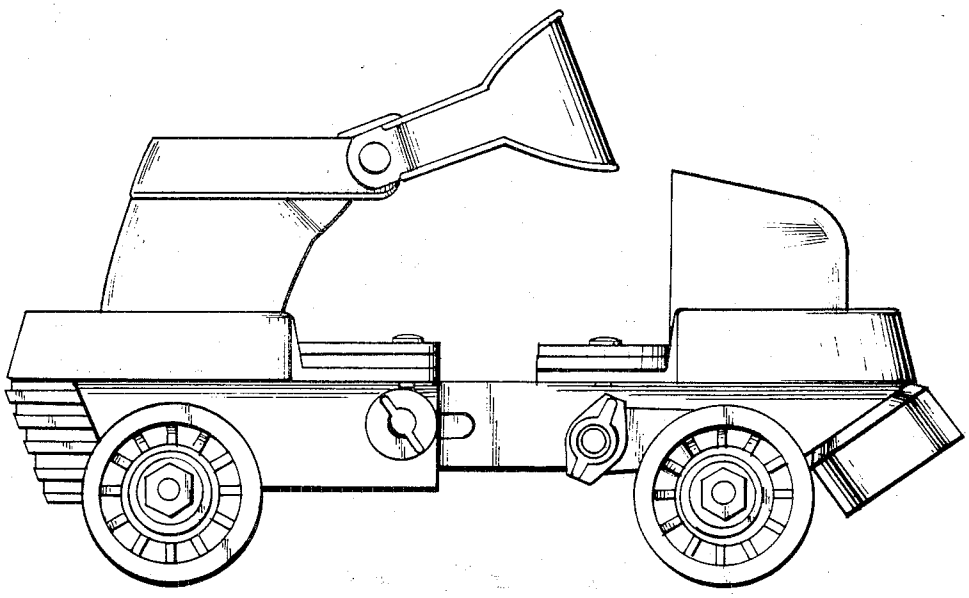

Fig. 6

