July 31, 1956 H. C. SIMMONS 2,756,810

SPEED LIMITING GOVERNORS FOR CONTINUOUS COMBUSTION TURBINE ENGINES

Filed March 31, 1952 3 Sheets-Sheet 1

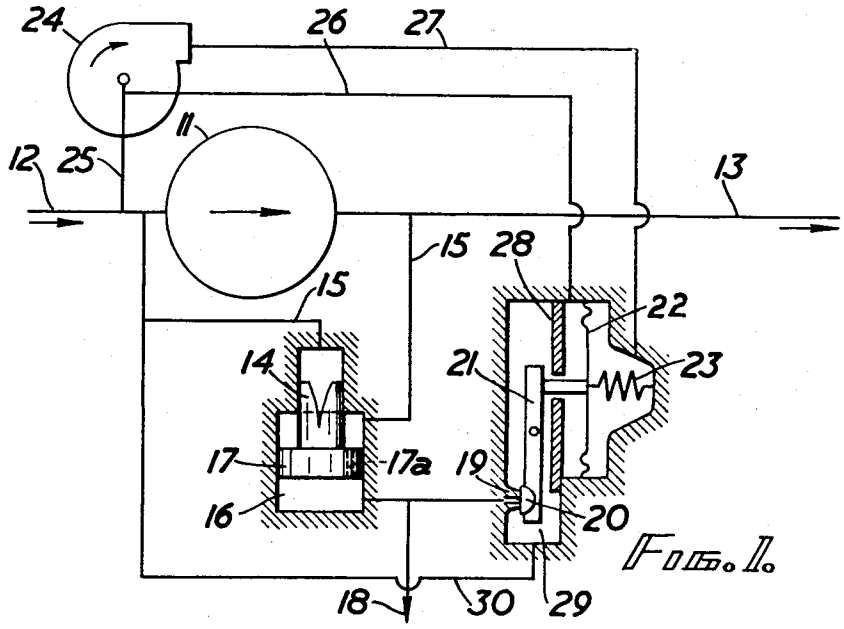

FIG. 1.

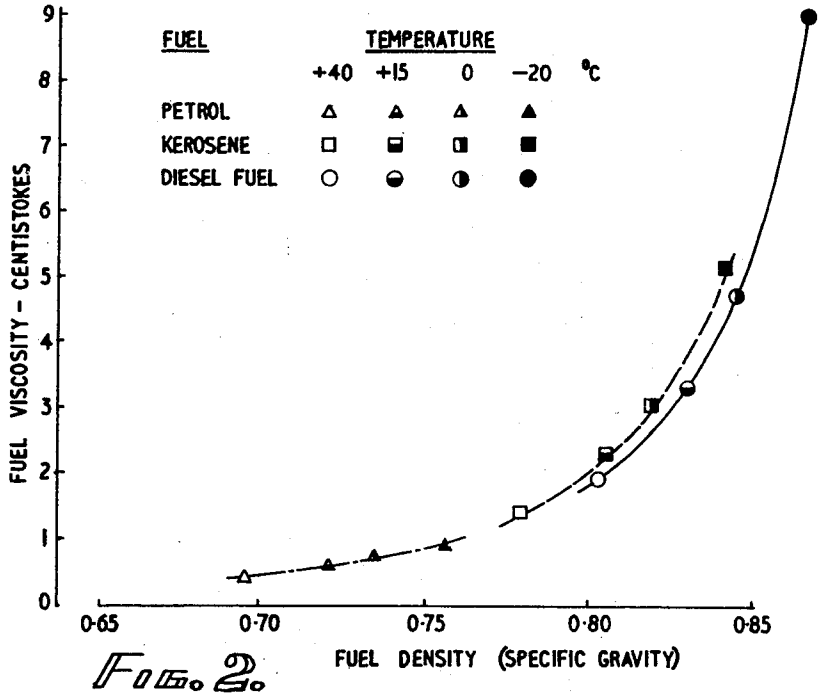

FIG. 2.

Inventor
Harold C. Simmons
By Reynolds, Beard & Christensen
Attorneys

July 31, 1956 H. C. SIMMONS 2,756,810

SPEED LIMITING GOVERNORS FOR CONTINUOUS COMBUSTION TURBINE ENGINES

Filed March 31, 1952 3 Sheets-Sheet 2

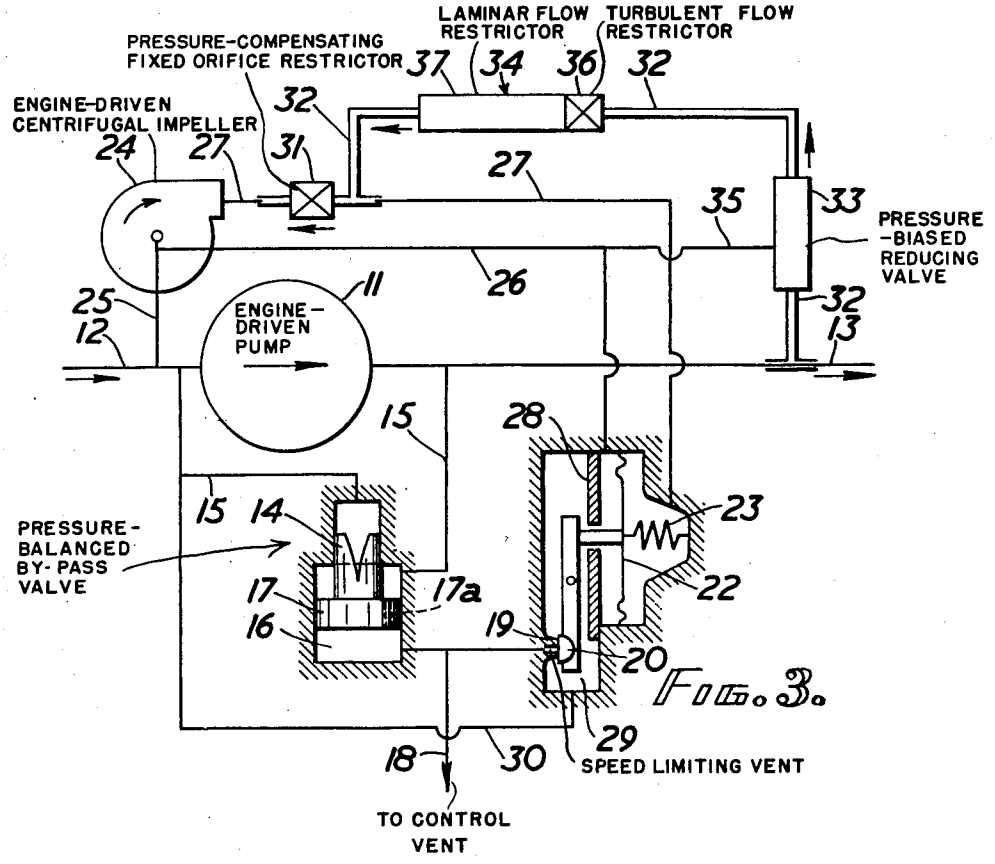

Fig. 3.

Inventor
Harold C. Simmons
By Reynolds, Brandt & Christensen
Attorneys

July 31, 1956 H. C. SIMMONS 2,756,810

SPEED LIMITING GOVERNORS FOR CONTINUOUS COMBUSTION TURBINE ENGINES

Filed March 31, 1952 3 Sheets-Sheet 3

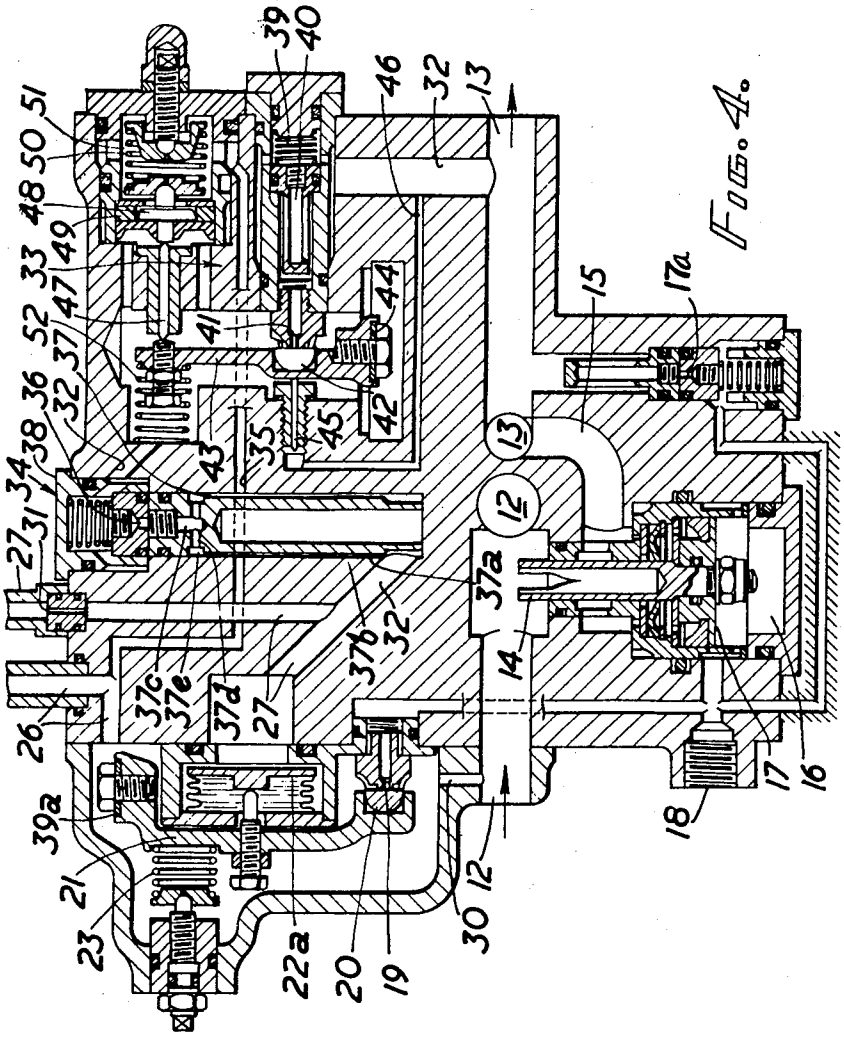

FIG. 4.

Inventor
Harold C. Simmons

By Reynolds, Beach & Christensen
Attorneys

United States Patent Office

2,756,810

Patented July 31, 1956

2,756,810

SPEED LIMITING GOVERNORS FOR CONTINUOUS COMBUSTION TURBINE ENGINES

Harold C. Simmons, Bristol, England, assignor to Dowty Equipment Limited, Cheltenham, England

Application March 31, 1952, Serial No. 279,633

Claims priority, application Great Britain April 9, 1951

7 Claims. (Cl. 158—36.4)

This invention relates to speed limiting governors of continuous combustion turbine engines, of the known kind in which the supply of fuel from an engine-driven pump can be limited by control of a vent of a servo mechanism associated with the pump, said vent, hereinafter referred to as the speed limiting vent, having a closure member which is subjected to opposed loadings of which one is supplied by a spring and the other of which is supplied by the pressure difference across an engine-driven centrifugal impeller as an index of engine speed and acting upon the closure member through a diaphragm or equivalent member, which equivalent member is implied as included hereinafter when the term "diaphragm" is used. When the centrifugal impeller has reached a speed at which the speed of the engine is to be limited the output pressure of the centrifugal impeller acting on the diaphragm will open the speed limiting vent and thereby limit the fuel supply to the engine. This speed will be designated the control point speed.

It is desirable that the speed limiting governor above defined shall operate critically and not permit of appreciable errors in its function and it is ordinarily designed to operate on a fluid of known density. For practical considerations it is convenient and usual to employ in the governing centrifugal impeller system the same fuel as is being used in the main fuel supply system of the engine and as will flow through the speed limiting vent when the latter is opened to limit the engine speed, and the governor is therefore designed to operate with this fuel.

As one of the factors which determines the pressure rise across the centrifugal impeller is the density of the fuel in the system wherein that impeller is incorporated, a speed limiting governor designed for use with one fuel may be unsuitable for use with another fuel of different density, and the present invention seeks to provide an improved speed limiting governor of the kind referred to which can be designed so that without further adjustment it can be used satisfactorily with a number of fuels of different densities.

The invention is based on the realization that there exists a unique relationship between the density and viscosity of a number of fuels which would be suitable for use in the engine fuel system, such fuels including diesel fuel, kerosene and petrol.

According to this invention, a pressure-compensating fixed restriction is provided in series with the centrifugal impeller, and there is also provided between said restriction and high pressure side of the diaphragm of the governor a branch connection with a source of fuel at a pressure greater than the pressure at the low pressure side of the diaphragm by a predetermined constant amount, said branch connection including flow regulating means for giving appropriate compensating flow through the pressure-compensating restriction, and said flow regulating means comprising flow restrictor means the characteristics of which are determined in part by the viscosity of the fuel in order to give a flow of fuel therethrough and hence through the pressure-compensating restriction such as will bring about, despite differences of fuel density, a constant total pressure difference across the centrifugal impeller and pressure-compensating restriction when the engine is operating at, or substantially at, its control point speed.

The branch connection will generally be connected with a source of high pressure fuel, e. g. the delivery line of the engine-driven main fuel supply pump, and will include a pressure-reducing valve for maintaining in the branch at the outlet of said valve the predetermined constant pressure above the pressure at the inlet of the centrifugal impeller.

If for instance the fuel in the engine fuel system and in the governing centrifugal impeller system is changed for a fuel of lower density, there will be a correspondingly lower difference of pressure across the centrifugal impeller and also a correspondingly increased flow through the pressure-compensating fixed restriction which will bring about a correspondingly increased pressure drop through said restriction, with the result that the total pressure difference across the centrifugal impeller and pressure-compensating restriction will remain unchanged for the engine's control point speed. In this way the invention provides an engine speed governor signal which is fuel density compensated.

In order that the invention may be more readily understood and carried into effect, the preferred embodiment thereof will now be described with reference to the accompanying diagrammatic drawings, of which:

Figure 1 represents diagrammatically a typical engine speed limiting governor of the kind referred to, and already known;

Figure 2 is a graphical representation of the relationship between the density and viscosity of a number of fuels suitable for use in the engine and governor systems;

Figure 3 shows diagrammatically how the invention is applied to the known governor of Figure 1; and

Figure 4 is a sectional elevation showing in detail the component parts which in Figure 3 are only indicated as to location and arrangement.

As shown in the typical system of Figure 1, an engine-driven pump **11** withdraws fuel from a tank (not shown) along an inlet line **12** and delivers the fuel along a delivery line **13** to the engine. The amount of fuel that flows along the delivery line **13** is regulated by a by-pass valve **14** in a by-pass passageway **15** between the outlet and inlet sides of the pump **11**. The by-pass valve **14** is of the known pressure-balanced type and the position of the valve element is determined by the rate at which fuel, admitted to the space **16** below the piston **17** of the valve by passage **17***a*, is permitted to leak from that space. Up to maximum speed the by-pass valve is controlled by means including a vent (not shown) at the end of a line **18** leading from the pressure space **16**. Such vent will have a control member controlled by various factors to determine the rate of leakage of fuel from the space **16**. For any given rate of leakage, the by-pass valve will assume a corresponding position of equilibrium determining how much fuel is allowed to return along the by-pass **15** and how much passes along the delivery line **13** to the engine. When the engine has reached its control point speed, the fuel supply is limited by the opening of a speed limiting vent **19** which is also connected with the pressure space **16** of the by-pass valve. The speed limiting vent **19** has a closure member **20** on a lever **21** connected with a diaphragm **22** which is loaded by a tension spring **23** tending to pull the diaphragm to the right to maintain the closure member **20** on the seating of the speed limiting vent **19**. An engine-driven centrifugal impeller **24** has its inlet or

eye connected with the inlet line 12 by a branch line 25 and the pressure rise across the centrifugal impeller 24 will be a function of the speed of the engine. The diaphragm 22 is exposed at its left-hand side to the pressure at the inlet of the centrifugal impeller 24 along a pipe line 26, and is exposed at its other side along the pipe line 27 to the outlet of the centrifugal impeller. The diaphragm 22 operates in a compartment which is defined in part by a baffle 28, and the space 29 into which the vent 19 opens has a drain connection 30 with the inlet line 12. The diaphragm 22 is thus loaded to close the vent 19 by the tension spring 23 and is loaded to tend to open said vent by the pressure difference across the centrifugal impeller 24. When this pressure difference has reached a predetermined value corresponding to the setting of the spring loading 23, it will overcome the effect of the spring loading and cause the lever 21 to move in a counter-clockwise direction to uncover the speed limiting vent 19. The by-pass valve 14 will respond by enlarging the by-pass 15 to limit the quantity of fuel that can flow to the engine.

The speed limiting vent 19 could equally well control a pressure-balanced device which, instead of controlling a by-pass across a pump of the fixed stroke type, governs the setting of the stroke-controlling member of a pump of the variable stroke type, in known manner.

Because the pressure rise across the centrifugal impeller 24 is dependent upon the density or specific gravity of the fuel being impelled thereby, the predetermined pressure difference across the centrifugal impeller required to open the vent 19 will be attained at different engine speeds for different fuel densities, and the governor above described will therefore limit the speed of the engine at these different speeds. A change in fuel density may be brought about by a temperature change, though this may not introduce too great an irregularity in the functioning of the governor, but may also result from different fuels being used in the main pump and governing centrifugal impeller systems which would result in unduly large variations from the desired maximum engine speed, which should remain at one fixed value, regardless of what fuel is used.

The present invention provides means for use in conjunction with the known governor described above, for compensating for changes in fuel density, and is based upon the realization that there exists a unique relationship between viscosity and density of a number of fuels suitable for use in the engine fuel system. This relationship is shown graphically by Figure 2, from which it will be seen that the three curves showing the relationship between viscosity and density for petrol, kerosene and diesel fuel oil over a range of temperatures, lie substantially upon a common curve. In designing an apparatus to provide an effect compensating for changes in fuel density, use can therefore be made of the changes in the viscosity of the fuel arising with changes in density, and such a compensating apparatus will now be described with reference to Figures 3 and 4 in which like reference numerals are used to denote like parts throughout all the figures.

Referring to Figure 3, wherein are combined diagrammatically the known governor of Figure 1 and the novel fuel density compensating means which are shown in detail in Figure 4, a pressure-compensating fixed restriction 31 is provided in the line 27 extending between the outlet of the centrifugal impeller 24 and the diaphragm 22 of the governor, and there is also provided between said restriction 31 and diaphragm 22 a branch line 32 connected with a source of high pressure fuel which in this case is the fuel in the delivery line 13 from the supply pump 11. The branch line 32 includes flow regulating means for giving appropriate compensating flow through the pressure compensating restriction 31, said flow regulating means comprising a pressure-reducing valve 33 and flow restrictor means indicated generally

at 34. The pressure-reducing valve 33, hereinafter more fully described, maintains in the branch line 32 at the outlet of said valve a pressure greater than the pressure at the inlet of the centrifugal impeller 24 by a predetermined constant amount, there being a connection 35 with the line 26 whereby use is made of centrifugal impeller inlet pressure to serve as a datum pressure for the valve 33. The characteristic of the flow restrictor means 34 is in part determined by the viscosity of the fuel common to the centrifugal impeller 24 and to the fuel supply pump 11. For this purpose said flow restrictor means 34 comprises a restriction 36 of the turbulent flow type, that is to say of the type substantially insensitive to the viscosity of the fuel, and in series therewith a restriction 37 of the laminar flow type, that is to say of the type sensitive to the viscosity of the fuel. The restrictions 36 and 37, as hereinafter more fully explained, together give a satisfactory relationship between flow and viscosity, and hence between flow and density, as to bring about through the pressure-compensating restriction 31 the required compensating flow which, despite differences in fuel density, will result in a constant total pressure difference across the centrifugal impeller 24 and pressure-compensating restriction 31 when the engine is operating at, or substantially at, its control point speed. This pressure difference acting upon the diaphragm 22 in opposition to the loading of the spring 23 will overcome the spring and rock the lever 21 to open the speed limiting vent 19 resulting in movement of the by-pass valve 14 to prevent any further increase in the rate of fuel supply to the engine. It should be noted that the compensating flow will give a reverse flow through the centrifugal impeller 24 against the pressure head in the latter, and this will tend to prevent development of an air core in the centrifugal impeller such as might introduce an error in the governor.

The duties performed by the restrictions 36 and 37 will now be explained in more detail. In designing the system, the fuel of highest density that is likely to be used is taken as a datum. When the engine reaches the governing or control point speed, the pressure difference across the centrifugal impeller 24 and across the pressure-compensating restriction 31 adds up to the pressure difference at which the governor operates. Thus the flow through the flow restrictor means 34 must be such as to give the requisite pressure difference across the restriction 31. When there is a change of fuel, the lower density of the fuel will give a reduced pressure difference across the centrifugal impeller 24 at the control point speed of the engine. In order that the governor will operate at this speed, the pressure difference across the restriction 31 must, when added to the centrifugal impeller pressure difference, equal the critical pressure difference across the governor, which is the same pressure difference as with the previous fuel. In other words, there must be an increased pressure difference and hence an increased flow through the restriction 31. The viscosity-sensitive restriction 37 will, by its nature, provide an increased flow resulting from a reduction in the viscosity of the fuel. The law governing changes of flow with changes of viscosity through the restriction 37 is not the same law as that which governs pressure drop and flow through the restriction 31. By itself, the restriction 37 would provide an increased flow through the restriction 31 whenever an increased flow is necessary for making good the reduced pressure rise across the centrifugal impeller, but the increased flow would be too great so that the mechanism would over-compensate. In other words, as the density of the fuel becomes lower, so the governor would progressively over-compensate. The function of the restriction 36 is to regulate this increased flow substantially to the required value in order that the compensation shall be accurate for all fuels. It will be appreciated that the pressure difference across the centrifugal impeller 24 and restriction 31 should be

constant at the control point speed irrespective of the density or viscosity of the fuel in the system. It therefore follows that as the pressure at the outlet of the pressure-reducing valve **33** is in excess of the pressure at the inlet of the centrifuge by a constant amount, the pressure difference across the flow restrictor means **34** comprising the restrictions **36** and **37** will likewise be constant at the control point speed irrespective of the density or viscosity of the fuel. The restriction **36** which is to all intents insensitive to the viscosity of the fuel, acts as a resistance in series with the viscosity-sensitive restriction **37** and, in accordance with the pressure drop available as between the outlet of the pressure-reducing valve **33** and the inlet side of the restriction **31**, controls the rate of flow through the viscosity-sensitive restriction **37** so that there will be the correct pressure at the governor side of the restriction **31** when the engine is operating at the control point speed. Without the viscosity-sensitive restriction **37** there would not be the needed increased flow with fuels of lower density, and without the restriction **36** the increased flow would be excessive and tend to cause over-compensation. The relative values of the restrictions **36** and **37** can be determined by known methods to give to the flow restrictor means **34** the required pressure-flow characteristic necessary for proper compensation.

Considering the governor when the engine and hence the centrifugal impeller is operating at the desired control point speed, there will be for fuels of lower density a correspondingly lower pressure rise across the centrifugal impeller **24** with a correspondingly higher flow and pressure drop through the pressure-compensating restriction **31**, whereas for fuels of higher density there will be a correspondingly higher pressure rise across the centrifugal impeller **24** with a correspondingly reduced flow and pressure drop across the restriction **31**, affording in all cases a constant total pressure difference across the centrifugal impeller **24** and restriction **31**. Thus any variation that would have been introduced by a change of fuel density is compensated by the pressure head across the pressure-compensating restriction as developed by the regulated flow.

The rate of flow along the branch line **32** at or near the engine's control point speed will subtract from the output of the pump **11** and thus from the maximum rate at which fuel can be received in the engine. The various restrictions and the effect of the pressure-reducing valve are thus calculated on the basis of a minimum satisfactory flow along the branch line **32** under this condition.

Referring now to Figure 4 in which the centrifugal impeller **24** and the fuel supply pump **11** are omitted, **17***a* indicates a fixed restriction in a communication extending between opposite sides of the piston **17** of the by-pass valve **14**, which restriction is indicated diagrammatically in the piston itself in Figures 1 and 3. The closure member **20** of the speed limiting vent **19** is mounted at the free end of a rocking lever **21** which is supported at its opposite end by a torsion spring **39**[a] forming the pivotal mounting of the lever. The diaphragm **22** of Figures 1 and 3 is replaced by an equivalent bellows device **22***a*. One side of the bellows **22***a* is exposed to fuel in the line **27** which includes the pressure-compensating restriction **31** and leads from the outlet of the centrifugal impeller (not shown), whilst the other side of the bellows is exposed to pressure in the line **26** which leads from the eye of the centrifugal impeller.

The restriction **36** of the flow restrictor means **34** is similar to the restriction **31** in that its restricted passage is a small central opening in a cylindrical member. The laminar flow restriction **37** however differs in that its restricted passage is of annular form defined between a cylindrical bore **37***a* and a cylindrical stem **37***b* of slightly smaller diameter than the bore. Fuel reaches the annular restricted passage by way of a central bore **37***c*, radiating bores **37***d*, and an annular groove **37***e*. The restrictions **36** and **37** are held in place by the pressure of a spring in the hollow of an end cap **38**. It may be stated that in the example given the required pressure-flow characteristic of the restrictions **36** and **37**, taken together, is obtained when the pressure differences across the individual restrictions **36** and **37** are in the ratio of one to three for the mean fuel density, i. e. the mean of the highest and lowest densities of fuels likely to be used.

The pressure-reducing valve **33** has an inlet chamber **39** containing a filter **40** and terminating in a valve opening **41** controlled by a closure member **42** on a lever **43** which is pivotally mounted at one end by a torsion spring **44**. Fuel at the pressure in the delivery line **13** has access to the valve opening **41** and impinges upon the closure member **42** tending to move it away from the seating around the valve opening **41**. A plunger **45** is arranged co-axially in line with the axis of the valve opening **41** and engages the lever **43** and is exposed at its outer end to fuel tapped from the branch line **32** along a further branch line **46**. The diameter of the plunger **45** is substantially equal to the area of the valve opening **41**, so that as regards the fuel inlet pressure the closure member **42** is in balance. The lever **43** is engaged by a stem **47** extending from a double-acting piston **48** which is slidably mounted in a cylinder **49**. A compression spring **50**, which is adjustable, bears upon the piston **48** and thereby urges the stem **47** against the lever **43**. The space **51** at the right-hand or rear side of the piston **48** is vented along the pipe line **35** to the inlet of the centrifugal impeller **24**. A light spring **52** maintains the lever **43** in engagement with the stem **47**. When the whole of the system is dead, the spring **50** maintains the closure member **42** away from the seating of the valve opening **41**. When the fuel supply pump **11** is pumping fuel along the delivery line **13**, some of the fuel will flow through the valve opening **41** and through the restrictions, and a back pressure will be created by the restrictions which will act upon the forward side of the piston **48**. This back pressure will continue to rise until it balances the loading on the piston **48** which is opposing such back pressure. The closure member **42** will now be so positioned in relation to the seating around the valve opening **41** that the flow of fuel through the valve opening will be just sufficient to maintain this load-balancing back pressure and so to give the requisite pressure reduction across the valve. In this way the pressure in the branch line **32'** at the outlet of the reducing valve **33** will be maintained at the requisite predetermined value which is a constant amount above that prevailing at the inlet of the centrifugal impeller.

The engine speed signal which in accordance with the invention is compensated for changes in fuel density, may be employed in a governor having means for varying a loading forming part of the force balance of which the engine speed signal is also a part. For example provision may be made for varying the effect of the spring loading **23** to alter slightly the governed engine speed with changes in altitude.

The centrifugal impeller **24** and the pressure-compensating fixed restriction **31** may be interchanged so that the restriction is at the inlet side of the centrifugal impeller. In such a case the position of the branch connection **32** in the line **27** will preferably remain unchanged but it may conceivably be moved to a junction between the centrifugal impeller **24** and the restriction **31**. With the preferred arrangement as shown, however, the centrifugal impeller **24** may be constituted by the rotor of the fuel pump, whereas in the alternative arrangements just referred to, a separate centrifugal impeller must be employed.

I claim:

1. In conjunction with the fuel supply system of a continuous combustion turbine engine, such as includes an

engine-driven fuel pump to deliver fuel from a low pressure fuel source to the burners of the engine, a centrifugal impeller to be driven by such engine and the delivery pressure whereof constitutes an index of engine speed, vent-controlled servo mechanism arranged to limit the delivery of fuel from the pump, and including (*a*) a closure for the vent, (*b*) pressureresponsive means arranged to control the closure in accordance with the pressure difference acting across such pressure-responsive means, (*c*) a first conduit means connected between the low pressure source and one side of such pressure-responsive means, and (*d*) a second conduit means connected between the low pressure source and the other side of the pressure-responsive means, and including the centrifugal impeller: the improvement which comprises governing apparatus for limiting the speed of such engine to a predetermined control point speed regardless of the density of the fuel supplied by such fuel system and through such centrifugal impeller and the vent-controlled servo mechanism; said governing apparatus comprising, in combination: (1) a pressure-compensating restriction connected in series with the centrifugal impeller in the second conduit means; (2) means to deliver from the fuel source a constant pressure head which is at all times in excess of centrifugal impeller delivery pressure and which is in excess of pressure at the centrifugal impeller inlet by a constant amount; (3) flow-regulating means connected for supply from said constant-pressure means and connected to the second conduit means for delivery to the latter at a point on the side of said pressure-compensating restriction remote from the low pressure source; said flow-regulating means including restrictor means having the characteristic of being sensitive in predetermined degree to the viscosity of fuel flowing therethrough, whereby to produce a total pressure difference across the centrifugal impeller and said pressure-compensating restriction which is constant, regardless of fuel density, when the engine is operating substantially at its control point speed.

2. Governing apparatus of the character and in conjunction with the fuel supply system as set forth in claim 1, wherein the flow-regulating means includes two flow restrictor means connected in series, one whereof is highly sensitive to fuel viscosity, and the other whereof, in predetermined relation to the first, is largely insensitive to fuel viscosity.

3. Critical-speed governing apparatus as in claim 2, wherein said restrictor means sensitive to viscosity comprises a cylindrical bore and a cylindrical stem, said bore and stem defining between them an annular flow path of small radial width.

4. Governing apparatus of the character and in conjunction with the fuel supply system as set forth in claim 1, characterized further in that said pressure-compensating restriction is located at the delivery side of the centrifugal impeller, within the second conduit means, and said flow-regulating means is connected to the second conduit means at that side of said pressure-compensating restriction which is remote from the delivery side of the centrifugal impeller.

5. Governing apparatus of the character and in conjunction with the fuel system as set forth in claim 1, wherein the constant-pressure means comprises a pressure-reducing valve connected to the delivery side of the pump as its source, and connected for delivery to the flow-regulating means and thence to the second conduit means.

6. In conjunction with the fuel supply system of a continuous combustion turbine engine, such as includes an engine-driven fuel pump to deliver fuel from a low pressure fuel source to the burners of the engine, and a centrifugal impeller driven by such engine and the delivery pressure whereof constitutes an index of engine speed, the improvement which comprises: vent-controlled servo mechanism arranged to limit the delivery of fuel from the pump, and including a vent and a closure therefor, pressure-responsive means operatively connected to said closure to control the same in accordance with the pressure difference acting across said pressure-responsive means, a first conduit means connected to the low pressure source and leading to one side of the pressure-responsive means, and a second conduit means also connected to the low pressure source and leading through the centrifugal impeller to the opposite side of said pressure-responsive means; a pressure-compensating restriction also connected in said second conduit means; a pressure-reducing valve means to deliver fuel at a constant pressure head which is of a value in excess at all times of centrifugal impeller delivery pressure and which is in excess of pressure at the centrifugal impeller inlet by a constant amount; and two flow restrictor means connected in series, for supply from said pressure-reducing valve means and for delivery to said second conduit means at a point on the side of said pressure-compensating restriction remote from the low pressure source, the characteristics of said two flow restrictor means being so chosen, relatively, that one thereof is highly sensitive to fuel viscosity and the other is largely insensitive to the same.

7. A fuel system for delivering fuel from a low pressure fuel supply source to the burners of a continuous combustion turbine engine, which fuel system comprises: an engine-driven fuel pump connected for supply from the fuel source and for delivery to the engine's burners; a centrifugal impeller also driven from the engine, whereby its delivery pressure constitutes an index of engine speed, and connected for supply from the fuel source; vent-controlled servo mechanism arranged to limit the delivery of fuel from the pump, and including a vent and a closure therefor, pressure-responsive means operatively connected to said closure to control the same in accordance with the pressure difference acting across said pressure-responsive means, a first conduit means connected to the low pressure source and leading to one side of said pressure-responsive means, and a second conduit means also connected to the low pressure source and leading to the opposite side of said pressure-responsive means; said centrifugal impeller being connected in said second conduit means intermediate the low pressure source and said pressure-responsive means; a pressure-compensating restriction also connected in said second conduit means; means to deliver fuel at a constant pressure head which is at all times in excess of centrifugal impeller delivery pressure and which is in excess of pressure at the centrifugal impeller inlet by a constant amount; and flow-regulating means connected for supply from said constant-pressure means and to said second conduit means for delivery into the latter at a point on the side of said pressure-compensating restriction which is remote from the low pressure source, and said flow-regulating means having the characteristic of being sensitive in predetermined degree to the viscosity of fuel flow therethrough, whereby to produce a total pressure difference across said centrifugal impeller and said pressure-compensating restriction which is constant, regardless of variations in fuel density, when the engine is operating substantially at its control point speed.

References Cited in the file of this patent

UNITED STATES PATENTS

2,231,764	Laing	Feb. 11, 1941
2,407,139	Clothier et al.	Sept. 3, 1946
2,419,171	Simpson et al.	Apr. 15, 1947
2,559,938	Carey	July 10, 1951