(19) Europäisches Patentamt
European Patent Office
Office européen des brevets

(11) EP 1 188 386 A1

(12) EUROPEAN PATENT APPLICATION
published in accordance with Art. 158(3) EPC

(43) Date of publication:
20.03.2002 Bulletin 2002/12

(21) Application number: **00935557.9**

(22) Date of filing: **06.06.2000**

(51) Int Cl.[7]: **A24C 5/39**

(86) International application number:
PCT/JP00/03670

(87) International publication number:
WO 00/74506 (14.12.2000 Gazette 2000/50)

(84) Designated Contracting States:
AT BE CH CY DE DK ES FI FR GB GR IE IT LI LU MC NL PT SE
Designated Extension States:
AL LT LV MK RO SI

(30) Priority: **08.06.1999 JP 16101699**

(71) Applicant: **Japan Tobacco Inc.**
Tokyo 105-8422 (JP)

(72) Inventors:
- **MASHINO, Shigemi**
Kita-ku, Tokyo 114-0004 (JP)
- **AIZAWA, Toshio**
Kita-ku, Tokyo 114-0004 (JP)

(74) Representative: **Weise, Reinhard, Dipl.-Ing.**
Reinhard-Skuhra-Weise & Partner
Patentanwälte
Postfach 44 01 51
80750 München (DE)

(54) CUT CIGARETTE FEEDING DEVICE OF CIGARETTE PRODUCING MACHINE

(57) A shredded tobacco supply apparatus of a cigarette manufacturing machine comprises two tobacco feeders 4 arranged along a tobacco band. Each of these tobacco feeders includes shredded tobacco reservoirs (12; 13), a deposition chute (26) receiving shredded tobacco from the reservoir through a bottom conveyor (18) and an ascending conveyor (22), and depositing the shredded tobacco, a feed roller unit (34) for delivering shredded tobacco, an acceleration roller (43) for accelerating the delivered shredded tobacco, and a jet diffuser (46) for blowing up the shredded tobacco toward a chimney (10). The chimney (10) adjoins the tobacco band in its traveling direction and inclines at an angle to the traveling direction.

FIG. 2

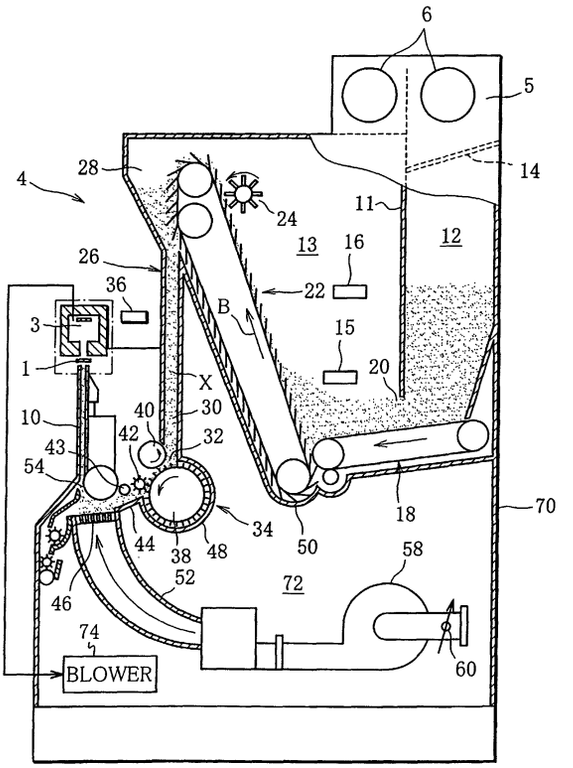

EP 1 188 386 A1

Description

TECHNICAL FIELD

[0001] The present invention relates to a supply apparatus for supplying shredded tobacco to a tobacco band of a cigarette manufacturing machine.

BACKGROUND ART

[0002] In general, a trough-type shredded tobacco supply apparatus (refer to Jpn. Pat. Appln. KOKOKU Publication No. 4-73992 or Jpn. Pat. Appln. KOKOKU Publication No. 5-70422, for example) or a chimney-type shredded tobacco supply apparatus is used in a cigarette manufacturing machine.

[0003] According to the trough-type supply apparatus, shredded tobacco is transferred from a reservoir to a feed roller unit by means of a slope conveyor and a gravity chute, further transferred together with an air current along a trough from the feed roller unit, and supplied to a tobacco band of the cigarette manufacturing machine.

[0004] According to the chimney-type supply apparatus, on the other hand, shredded tobacco is transferred from a reservoir to the interior of a chimney by way of passing between a pair of delivery drums, then blown up by means of an ascending air current in the chimney, and supplied to a tobacco band.

[0005] With the development of modern higher-speed cigarette manufacturing machines, it is becoming hard to maintain the flavor and taste, and quality of manufactured cigarettes with stability. This can be supposed to be caused by fragmentation of the shredded tobacco in the aforesaid supply apparatus or volatilization of a top flavor that is added to the shredded tobacco, for example.

[0006] More specifically, in the case of the chimney-type supply apparatus, the rotational speed of the paired delivery drums increases as the cigarette manufacturing machine is speeded up. Therefore, fragmentation of the shredded tobacco increases when the shredded tobacco passes between the delivery drums. This increase of fragmentation is liable to cause the shredded tobacco to slip out of the cut ends of cigarettes during manufacturing processes for cigarettes or filter cigarettes, thus being a principal factor that lowers the quality of the cigarettes.

[0007] In the case of the trough-type supply apparatus, on the other hand, the velocity of air that flows along the trough increases as the cigarette manufacturing machine is speeded up. As the shredded tobacco is transferred in the trough, the quantity of air that directly touches the shredded tobacco, that is, the exposure to air, increases.

[0008] If the exposure to air increases, the volatilization of the top flavor that is added to the shredded tobacco increases. Accordingly, the top flavor of the manufactured cigarettes is reduced, so that a smoker feels a reduction of tobacco smoke or astringency and acridity of tobacco smoke.

[0009] If the exposure to air in the supply apparatus is determined by the quantity of air that touches the shredded tobacco while the shredded tobacco is being supplied from the reservoir to the tobacco band, the exposure Q to air is given by

$$Q = S \int (Va - Vt)dt, \quad (1)$$

where S is the area of contact between the shredded tobacco and air, Va is the flow rate of air that transfers the shredded tobacco, Vt is the moving speed of the shredded tobacco, and t is time.

[0010] If the exposure to air in the chimney-type supply apparatus obtained according to Expression (1) is 1.0, the exposure to air in the trough-type supply apparatus obtained from Expression (1) is 1.7. The exposure to air in a long-trough supply apparatus of the same type that is provided with a 1.4-time longer trough is 1.9.

[0011] The difference in the exposure to air between the chimney-type supply apparatus and the trough-type supply apparatus can be supposed to be attributable to variation in the transfer distance of the shredded tobacco that is caused by the air current. More specifically, the transfer distance from the feed roller unit to the inlet of the trough of the trough-type supply apparatus ranges from about 600 to 800 mm, while the transfer distance from the delivery drums to the inlet of the chimney of the chimney-type supply apparatus ranges from about 100 to 150 mm. Thus, the transfer distance of the chimney-type supply apparatus is shorter than the transfer distance of the trough-type supply apparatus. Therefore, the exposure to air of the chimney-type supply apparatus is less than that of the trough-type supply apparatus.

[0012] FIG. 4 shows estimates of the flavor/taste of cigarettes that are manufactured by using the chimney- and trough-type supply apparatuses, individually. In FIG. 4, larger values for estimated rank indicate better flavor/taste of cigarettes. In FIG. 4, A, B and C individually represent results of evaluation on cigarettes that are manufactured by using the chimney-type, trough-type, and long-trough supply apparatuses, respectively. As seen from FIG. 4, there is a negative correlation between the flavor/taste and exposure to air. More specifically, the flavor/taste of a cigarette worsens if the exposure to air increases.

[0013] In order to reduce the exposure to air, moreover, it is necessary also to reduce the trim of the shredded tobacco out of a shredded tobacco layer that is formed on the tobacco band. To attain this, the supply apparatus must ensure stable constant-rate shredded tobacco supply.

DISCLOSURE OF THE INVENTION

[0014] The object of the present invention is to provide a shredded tobacco supply apparatus of a cigarette manufacturing machine, capable of reducing the exposure of shredded tobacco to air and fragmentation thereof and ensuring outstanding constant-rate shredded tobacco supply.

[0015] The above object is achieved by a shredded tobacco supply apparatus of the present invention, and this supply apparatus comprises a tobacco feeder. This tobacco feeder includes a reservoir stored with shredded tobacco, an ascending conveyor capable of receiving the shredded tobacco from the reservoir and transferring the shredded tobacco upward, a deposition chute capable of receiving the shredded tobacco from the ascending conveyor and depositing the received shredded tobacco, a feed roller unit of a constant-rate supply type for delivering the shredded tobacco from the deposition chute, acceleration means for accelerating the shredded tobacco delivered from the feed roller unit without using pneumatic pressure, and pneumatic transportation means for transporting the shredded tobacco accelerated by means of the acceleration means, along with an air current, toward a tobacco band of the cigarette manufacturing machine. The pneumatic transportation means includes a chimney for guiding the shredded tobacco and the air current toward the tobacco band, the chimney inclining at an angle to the traveling direction of the tobacco band.

[0016] In the aforesaid supply apparatus, the shredded tobacco in the deposition chute is deposited, so that the exposure of the shredded tobacco to air in the deposition can be reduced considerably. Further, the deposition chute permits stable shredded tobacco supply to the feed roller unit and ensures the constant-rate supply performance of the feed roller unit and reduction of fragmentation of the shredded tobacco.

[0017] Since the acceleration means never pneumatically accelerates the shredded tobacco, an acceleration path from the feed roller unit to the pneumatic transportation means need not be long. Thus, there is no possibility of the acceleration means increasing the exposure of the shredded tobacco to air.

[0018] If the chimney is inclined, a speed component in the traveling direction of the tobacco band is applied to the shredded tobacco that ascends together with the air current in the chimney, so that the shredded tobacco can be steadily attracted in a layer to the tobacco band. In consequence, the exposure of the shredded tobacco to air is reduced.

[0019] Thus, the supply apparatus of the present invention can reduce both the exposure of the shredded tobacco to air and fragmentation thereof, thereby favorably maintaining the flavor/taste, and quality of cigarettes.

[0020] Preferably, the supply apparatus may further comprise a bottom conveyor. This bottom conveyor forms the bottom wall of the reservoir and transfers the shredded tobacco from the reservoir toward the ascending conveyor. The bottom conveyor serves to supply the shredded tobacco smoothly from the reservoir to the ascending conveyor and reduce fragmentation of the shredded tobacco.

[0021] Further, the supply apparatus may be provided with a plurality of tobacco feeders. In this case, the respective chimneys of these tobacco feeders are arranged adjacent to one another in the traveling direction of the tobacco band. If the shredded tobacco is supplied from the chimneys to the tobacco band in this manner, the required rate of shredded tobacco supply for each chimney can be lowered, so that the constant-rate supply performance for the shredded tobacco is improved, and the exposure of the shredded tobacco to air is reduced.

[0022] The pneumatic transportation means includes a jet diffuser for jetting out an air current toward the chimney, the jet diffuser being capable of jetting out the air current at an angle of inclination equal to the angle of inclination of the chimney. In this case, the shredded tobacco in the chimney can uniformly receive a speed component in the traveling direction of the tobacco band.

[0023] The acceleration means may include an acceleration roller located for rotation between the feed roller unit and the jet diffuser. The acceleration roller can mechanically accelerate the shredded tobacco by rotating, and never increases the exposure of the shredded tobacco to air.

[0024] Further, the pneumatic transportation means can circulate the air current. In this case, a top flavor that is volatilized from the shredded tobacco can never escape from the supply apparatus.

BRIEF DESCRIPTION OF THE DRAWINGS

[0025]

FIG. 1 is a cutaway front view of a supply apparatus according to one embodiment;
FIG. 2 is a sectional view of a tobacco feeder of FIG. 1;
FIG. 3 is an enlarged perspective view showing a part of an acceleration roller of FIG. 2; and
FIG. 4 is a graph showing the relationship between the exposure to air and the flavor/taste rank of cigarettes.

BEST MODE FOR CARRYING OUT THE INVENTION

[0026] Referring to FIG. 1, there is shown a cigarette manufacturing machine, which is provided with an endless tobacco band 1. The tobacco band 1 extends toward a rod forming section 2 of the cigarette manufacturing machine and travels in the direction of arrow A. While it is traveling, the tobacco band 1 passes through

a suction chamber 3 and is supplied with sucking force from the suction chamber 3. The suction chamber 3 is connected to a blower, and this blower keeps the interior of the suction chamber 3 at a given negative pressure. As seen from FIG. 1, the tobacco band 2 is slightly downwardly inclined toward the rod forming section 2.

[0027] The cigarette manufacturing machine is provided with a supply apparatus for supplying shredded tobacco to the tobacco band 1, and this supply apparatus includes two tobacco feeders 4. These tobacco feeders 4 are arranged in the traveling direction of the tobacco band 1. Since these tobacco feeders 4 have the same construction, one of the tobacco feeders 4 will be described below.

[0028] The tobacco feeder 4 is provided with a hopper 5 over the tobacco band 1, and the hopper 5 is stored with shredded tobacco. More specifically, the hopper 5 is connected to a shredded tobacco distributor (not shown) by means of two lines 6. This distributor supplies the shredded tobacco through the lines 6 to the hopper 5 immediately after the shredded tobacco is dressed with a high-volatility top flavor.

[0029] On the other hand, a chimney 10 is located right under the tobacco band 2. As mentioned later, the shredded tobacco in the hopper 5 is introduced into the chimney 10 and blown up in the chimney 10 toward the tobacco band 1. Accordingly, the blown-up shredded tobacco is attracted in a layer to the lower surface of the tobacco band 1, whereupon a shredded tobacco layer (not shown) is formed on the tobacco band 1. As seen from FIG. 1, the respective chimneys 10 of the two tobacco feeders 4 are located adjacent to each other in the traveling direction of the tobacco band 1.

[0030] The shredded tobacco layer, along with the tobacco band 1, is moved toward the rod forming section 2 and supplied to the same. As is generally known, the rod forming section wraps the shredded tobacco layer in paper (not shown), thereby continuously forming a tobacco rod.

[0031] As seen from FIG. 1, the chimney 10 is inclined at a given angle α (e.g., $\alpha = 45°$) to the traveling direction of the tobacco band 1.

[0032] With respect to the traveling direction of the tobacco band 1, moreover, the width of the chimney 10 is shorter than the width of a trough of a conventional trough-type supply apparatus. However, a total width W of the two adjacent chimneys 10 is greater than the width (e.g., 620 mm) of a chimney of the conventional chimney-type supply apparatus. Incidentally, the width of the conventional trough is 1,100 mm, while the total width W of the two chimneys 10 is 1,730 mm, so that the width of each chimney 10 is 865 mm.

[0033] Referring to FIG. 2, there is shown a supply path for the shredded tobacco that extends from the aforesaid hopper 5 to the chimney 10. The supply path is provided with a first reservoir 12 and a second reservoir 13 under the hopper 5. The first and second reservoir 12 and 13 are divided by means of a partition wall 11. As seen from FIG. 2, the hopper 5, first reservoir 12, and second reservoir 13 are located in the back portion of the tobacco feeder 4.

[0034] The hopper 5 has an openable gate 14. When the gate 14 is opened, the shredded tobacco is thrown from the hopper 5 onto the first reservoir 12. In order to control the open-close operation of the gate 14, the first reservoir 12 is provided with a level sensor 16. The level sensor 16 optically detects the storage of the shredded tobacco in the first reservoir 12 and outputs a detection signal based thereon. The gate 14 is opened or closed in accordance with the detection signal from the level sensor 16, whereby the storage of the shredded tobacco in the first reservoir 12 can be kept continually on a given level or above. Thus, the distance of fall of the shredded tobacco from the gate 14 is shortened, so that both the exposure of the shredded tobacco to air and fragmentation thereof are reduced.

[0035] A bottom conveyor 18 is located under the first reservoir 12. The bottom conveyor 18 forms the bottom wall of the first reservoir 12 and extends into the second reservoir 13. An outlet 20 is formed in the lower part of the partition wall 11. If the bottom conveyor 18 is run, therefore, the bottom conveyor 18 smoothly delivers the shredded tobacco in the first reservoir 12 through the outlet 20. If the shredded tobacco is thus delivered from the first reservoir 12 to the second reservoir 13, fragmentation of the shredded tobacco is reduced considerably.

[0036] A level sensor 15 is also located in the second reservoir 13. The level sensor 15 optically detects the storage of the shredded tobacco in the second reservoir 13 and outputs a detection signal based thereon. The traveling speed of the bottom conveyor 18 is controlled in accordance with the detection signal from the level sensor 15, whereby the storage of the shredded tobacco in the second reservoir 13 can be kept continually on a given level.

[0037] An ascending conveyor 22 is connected to the termination of the bottom conveyor 18. The ascending conveyor 22 extends upward at a sharp angle from the termination of the bottom conveyor 18. A large number of scraping pins are uniformly distributed on the conveying surface of the ascending conveyor 22. If the ascending conveyor 22 is run in the direction indicated by arrow B, therefore, the ascending conveyor 22 receives the shredded tobacco from the bottom conveyor 18, and transfers the received shredded tobacco upward in a layer.

[0038] A paddle roller 24 is located for rotation on the upper part of the ascending conveyor 22. The rotation of the paddle roller 24 serves to remove surplus shredded tobacco from the ascending conveyor 22, thereby making the thickness of the shredded tobacco layer on the conveying surface of the ascending conveyor 22 uniform.

[0039] The upper end portion of the ascending conveyor 22 is continuous with an inlet 28 of a deposition

chute 26. More specifically, the inlet 28 adjoins the upper end portion of the ascending conveyor 22 and upwardly opens wide. The deposition chute 26 includes a pendent passage 30 that is connected to the lower end of the inlet 28, the pendent passage 30 downwardly extending straight. A feed roller unit 34 of a constant-rate supply type is located at the lower end of the pendent passage 30 or an outlet 32 of the deposition chute 26.

[0040] When the shredded tobacco layer reaches the upper end portion of the ascending conveyor 22, it is supplied from the ascending conveyor 22 to the pendent passage 30 through the inlet 28 of the deposition chute 26. Thus, the shredded tobacco deposits in the pendent passage 30 and forms a shredded tobacco deposition wall X that extends from the feed roller unit 34.

[0041] The deposition chute 26 has a level sensor 36. The level sensor 36 optically detects the upper end level of the deposition wall X and outputs a detection signal based thereon. The travel of the ascending conveyor 22, that is, the rate of shredded tobacco supply from the ascending conveyor 22 to the deposition chute 26, is controlled in accordance with the detection signal from the level sensor 36, whereby the deposition wall X in the deposition chute 26 can be kept continually on a fixed height level.

[0042] The feed roller unit 34 includes a feed roller 38 and a smoothing roller 40. The feed roller 38 is located for rotation right under the outlet 32 of the deposition chute 26. The feed roller 38 has a large number of needles uniformly distributed on the outer peripheral surface thereof. The smoothing roller 40 has a diameter smaller than that of the feed roller 38, and is located for rotation so as to being brought into rolling contact with the feed roller 38 from above. Thus, a gap that is equivalent to the length of the needles is secured between the outer peripheral surface of the feed roller 38 and the smoothing roller 40, and this gap communicates with the outlet 32 of the deposition chute 26.

[0043] The feed roller 38 and the smoothing roller 40 are rotatable in the counterclockwise direction of FIG. 2. As the feed roller 38 rotates, the needles of the feed roller 38 scrape out the shredded tobacco from the outlet 32 of the deposition chute 26, while the smoothing roller 40 keeps the rate at which the shredded tobacco is scraped out constant. Thus, the feed roller 38 scrapes out the shredded tobacco in a layer that has a thickness equivalent to the needle length.

[0044] Since the shredded tobacco deposition wall X in the deposition chute 26 is kept continually on the fixed height level, as mentioned before, the total weight of the deposition wall X is relatively great. If the shredded tobacco is scraped out by means of the feed roller 38, therefore, the deposition wall X in the deposition chute 26 lowers toward the feed roller 38 by its own weight, and the shredded tobacco is continually densely packed between the needles of the feed roller 38. In consequence, the rate at which the shredded tobacco is scraped out by means of the feed roller 38 is determined depending on the rotational speed of the feed roller 38, so that constant-rate shredded tobacco supply by means of the feed roller unit 34 can be ensured.

[0045] Since the shredded tobacco in the deposition wall X is packed densely, the contact between air and the shredded tobacco that forms the deposition wall X is limited. Therefore, the exposure of the shredded tobacco to air in the deposition chute 26 is reduced considerably. The deposition chute 26 may be vibrated in order to ensure smooth descent of the deposition wall X.

[0046] The feed roller unit 34 further includes a picker roller 42. The picker roller 42 is located for rotation on the lower-stream side of the smoothing roller 40 with respect to the rotating direction of the feed roller 38. As the picker roller 42 rotates, the roller 42 strips off the shredded tobacco from the feed roller 38 and delivers the shredded tobacco onto a guide plate 44.

[0047] The guide plate 44 is connected to a roller shell 48 that covers the feed roller 38 from below, the roller shell 48 being connected to the wall of the deposition chute 26. As seen from FIG. 2, the ascending conveyor 22 and the bottom conveyor 18 are covered by a conveyor shell 50 from below, and the conveyor shell 50 being continuous with the wall of the deposition chute 26.

[0048] Over the guide plate 44, moreover, an acceleration roller 43 is located adjacent to the picker roller 42 for rotation. As shown in FIG. 3, the acceleration roller 43 has a large number of teeth 43a on the outer peripheral surface thereof. These teeth 43a are triangular and are arranged at equal spaces in the circumferential direction of the acceleration roller 43. The shredded tobacco delivered from the picker roller 42 is held between the acceleration roller 43 and the guide plate 44. As the acceleration roller 43 rotates, the roller 43 scrapes out the shredded tobacco on the guide plate 44 by means of the teeth 43a thereof and accelerates the shredded tobacco toward a jet diffuser 46.

[0049] The jet diffuser 46 is located under the aforesaid chimney 10, and a shredded tobacco guide passage 54 is secured between the jet diffuser 46 and the chimney 10. The jet diffuser 46 is formed of a plate that has a large number of slanting slits, and is attached to the upper end of an air duct 52. The angle of inclination of the slanting slits is equal to the aforesaid angle of inclination of the chimney 10.

[0050] The air duct 52 extends downward from the jet diffuser 46 and is connected to a discharge port of a blower 58. The blower 58 supplies air to the jet diffuser 46 through the air duct 52, whereupon the jet diffuser 46 jets out air toward the chimney 10 through the guide passage 54.

[0051] The air current ejected from the jet diffuser 46 flows through the guide passage 54 and generates the ascending air current in the chimney 10. This ascending air current guides the shredded tobacco, accelerated by means of the acceleration roller 43, into the chimney 10, and causes the shredded tobacco to ascend in the chim-

ney 10 toward the tobacco band 1.

[0052] The slanting slits of the jet diffuser 46 serve to rectify the air current and generate in the chimney 10 an ascending air current that matches the inclination of the chimney 10, as indicated by arrow C in FIG. 1. Therefore, a speed component in the traveling direction of the tobacco band 1 is applied to the shredded tobacco that ascends toward the tobacco band 1, so that the shredded tobacco is steadily attracted in a layer to the lower surface of the tobacco band 1 and forms the shredded tobacco layer. In consequence, the shredded tobacco does not substantially drift near the tobacco band 1 without being attracted the tobacco band 1, so that the exposure of the shredded tobacco to air can be reduced.

[0053] As shown in FIG. 2, the aforesaid blower 58 is located in a housing 70 of the tobacco feeder 4. More specifically, the housing 70 includes a lower chamber 72 that is defined under the aforesaid roller shell 48 and the conveyor shell 58, and the blower 58 is located in the lower chamber 72 and has an intake port that opens into the lower chamber 72. A regulating valve 60 is located in the intake port.

[0054] On the other hand, a blower 74 that is connected to the suction chamber 3 for the tobacco band 1 is also located in the lower chamber 72, and the discharge port of the blower 74 opens into the lower chamber 72. Thus, an air current delivered from the upper end of the chimney 10 is returned to the lower chamber 72 of the housing 70 via the suction chamber 3 and the blower 74, whereupon an air current circulation path is established.

[0055] In the case of the tobacco feeder 4, the time required before the shredded tobacco from the feed roller unit 34 reaches the tobacco band 1, that is, the air contact time of the shredded tobacco, is 0.077 sec. In the case of the conventional trough-type supply apparatus, on the other hand, the air contact time of shredded tobacco is 0.298 sec. Thus, the tobacco feeder 4 according to one embodiment, compared with the conventional trough-type supply apparatus, can reduce the exposure of the shredded tobacco to air considerably. Specific measurement data indicate that the exposures of the shredded tobacco to air for the case of the tobacco feeder 4 and the conventional trough-type supply apparatus are 4.4 cm^3 and 13.7 cm^3, respectively.

[0056] Since the supply apparatus of the one embodiment includes the two tobacco feeders 4, on the other hand, the total width W of the two chimneys 10 is greater than the width of the trough of the conventional trough-type supply apparatus even though the width of each chimney 10 is shorter than that of the conventional trough. Therefore, the two chimneys 10 increase the shredded tobacco supply area with respect to the traveling direction of the tobacco band 1. In consequence, the required rate of shredded tobacco supply for each chimney 10, that is, the speed of the ascending air current in the chimney 10, can be lowered in forming a shredded tobacco layer with a given thickness on the tobacco band 1. In the case of the conventional chimney, the speed of the ascending air is 29.0 m/sec. In the case of the trough-type supply apparatus, moreover, the jet velocity of the air current along the trough is 40 m/sec, while the speed of the ascending air current in the chimney 10 is reduced to 26.5 m/sec.

[0057] If the speed of the ascending air current in the chimney 10 is lowered in this manner, the exposure of the shredded tobacco to air is reduced. Incidentally, in the case of the conventional chimney-type supply apparatus, the exposure of the shredded tobacco to air is 7.0 cm^3.

[0058] If each chimney 10 is narrow, as mentioned before, the ascending air current can be easily generated as a uniform laminar flow in the width direction of the chimney 10. This ascending air current uniformly supplies the shredded tobacco to the lower surface of the tobacco band 1, thus enabling constant-rate shredded tobacco supply to the tobacco band 1. In consequence, the density of the shredded tobacco layer formed on the tobacco band 1 is uniform in the traveling direction of the tobacco band 1, so that the quality of cigarettes is improved.

[0059] If the rate of cut tobacco supply of each tobacco feeder 4 is lowered, on the other hand, the rotational speed of the feed roller unit 34, that is, the feed roller 38 and the picker roller 40, is also lowered. Accordingly, fragmentation of the shredded tobacco is considerably reduced when the shredded tobacco is scraped out of the deposition chute 26 by means of the feed roller unit 34.

[0060] In the tobacco feeders 4 of the one embodiment, as described above, the exposure of the shredded tobacco to air is reduced, so that the top flavor that is added to the shredded tobacco can be restrained from volatilizing, and therefore, the flavor/taste of the cigarettes can be maintained with stability.

[0061] Since the air current generated by means of the blower circulates in the tobacco feeders 4, as mentioned before, moreover, the top flavor volatilized from the shredded tobacco in the tobacco feeders 4 never escapes from the tobacco feeders 4. Thus, air in the tobacco feeders 4 is saturated with the top flavor, and the top flavor can be securely prevented from volatilizing afterward from the shredded tobacco.

Claims

1. A shredded tobacco supply apparatus of a cigarette manufacturing machine, said supply apparatus comprising a tobacco feeder, said tobacco feeder including

   a reservoir stored with shredded tobacco,
   an ascending conveyor capable of receiving the shredded tobacco from said reservoir and transferring the shredded tobacco upward,

a deposition chute capable of receiving the shredded tobacco from said ascending conveyor and depositing the received shredded tobacco,

a feed roller unit of a constant-rate supply type for delivering the shredded tobacco from said deposition chute,

acceleration means for accelerating the shredded tobacco delivered from said feed roller unit without using pneumatic pressure, and

pneumatic transportation means for transporting the shredded tobacco accelerated by means of said acceleration means, along with an air current, toward a tobacco band of said cigarette manufacturing machine,

said pneumatic transportation means including a chimney for guiding the shredded tobacco and the air current toward the tobacco band, the chimney inclining at an angle to the traveling direction of the tobacco band.

2. The apparatus according to claim 1, which further comprises a bottom conveyor forming a bottom wall of said reservoir and capable of transferring the shredded tobacco from said reservoir toward said ascending conveyor.

3. The apparatus according to claim 1, wherein the apparatus comprises a plurality of said tobacco feeders, the respective chimneys of said tobacco feeders being arranged adjacent to one another in the traveling direction of the tobacco band.

4. The apparatus according to claim 1, wherein said pneumatic transportation means includes a jet diffuser for jetting out an air current toward the chimney, the jet diffuser being capable of jetting out the air current at an angle of inclination equal to the angle of inclination of the chimney.

5. The apparatus according to claim 4, wherein said acceleration means includes an acceleration roller located for rotation between said feed roller unit and the jet diffuser, the acceleration roller being capable of mechanically accelerating the shredded tobacco by rotating.

6. The apparatus according to claim 1, wherein said pneumatic transportation means circulates the air current.

FIG. 1

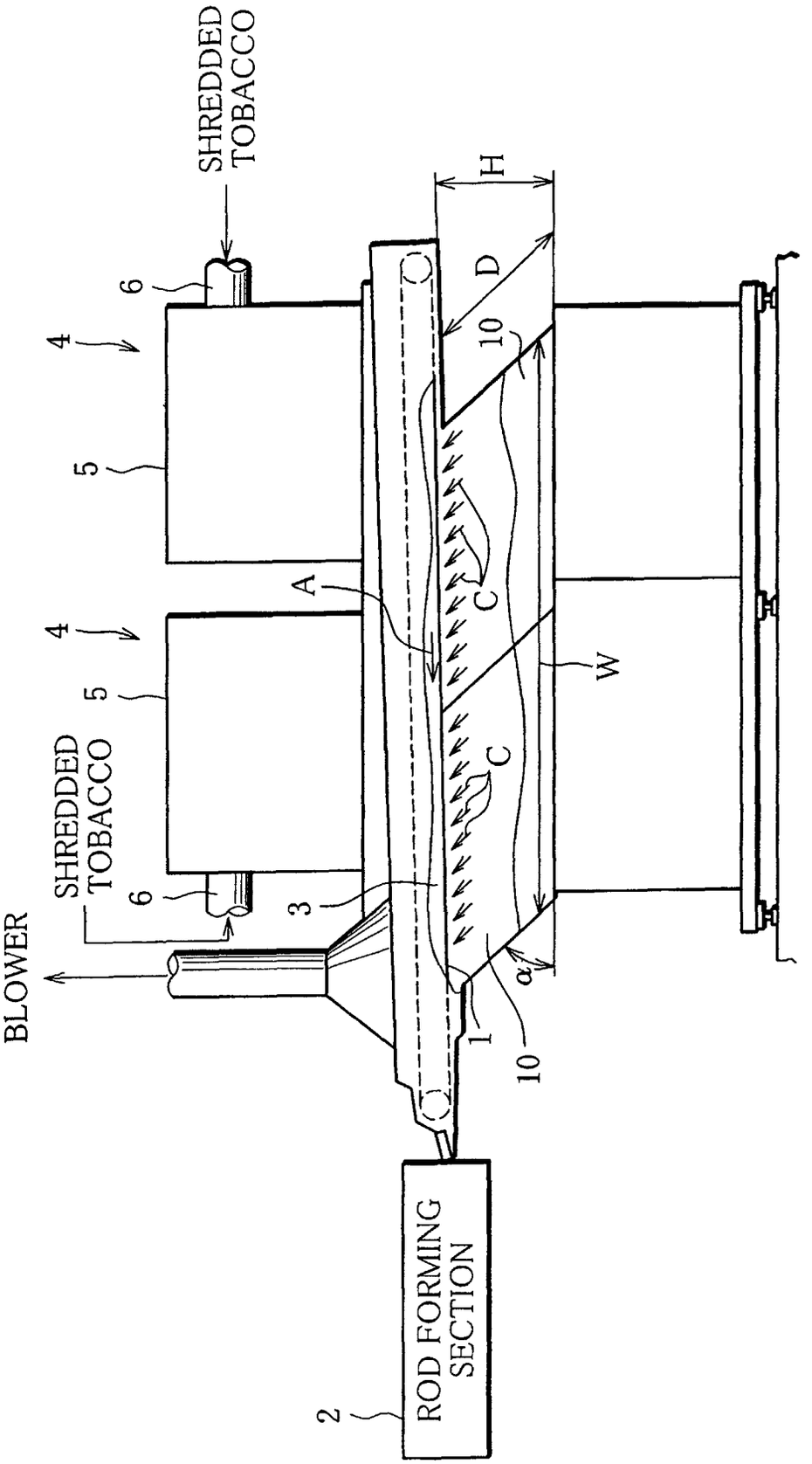
SHREDDED TOBACCO
H
D
6
4
5
10
A
C
W
SHREDDED TOBACCO
BLOWER
3
α
1
ROD FORMING SECTION
2

FIG. 2

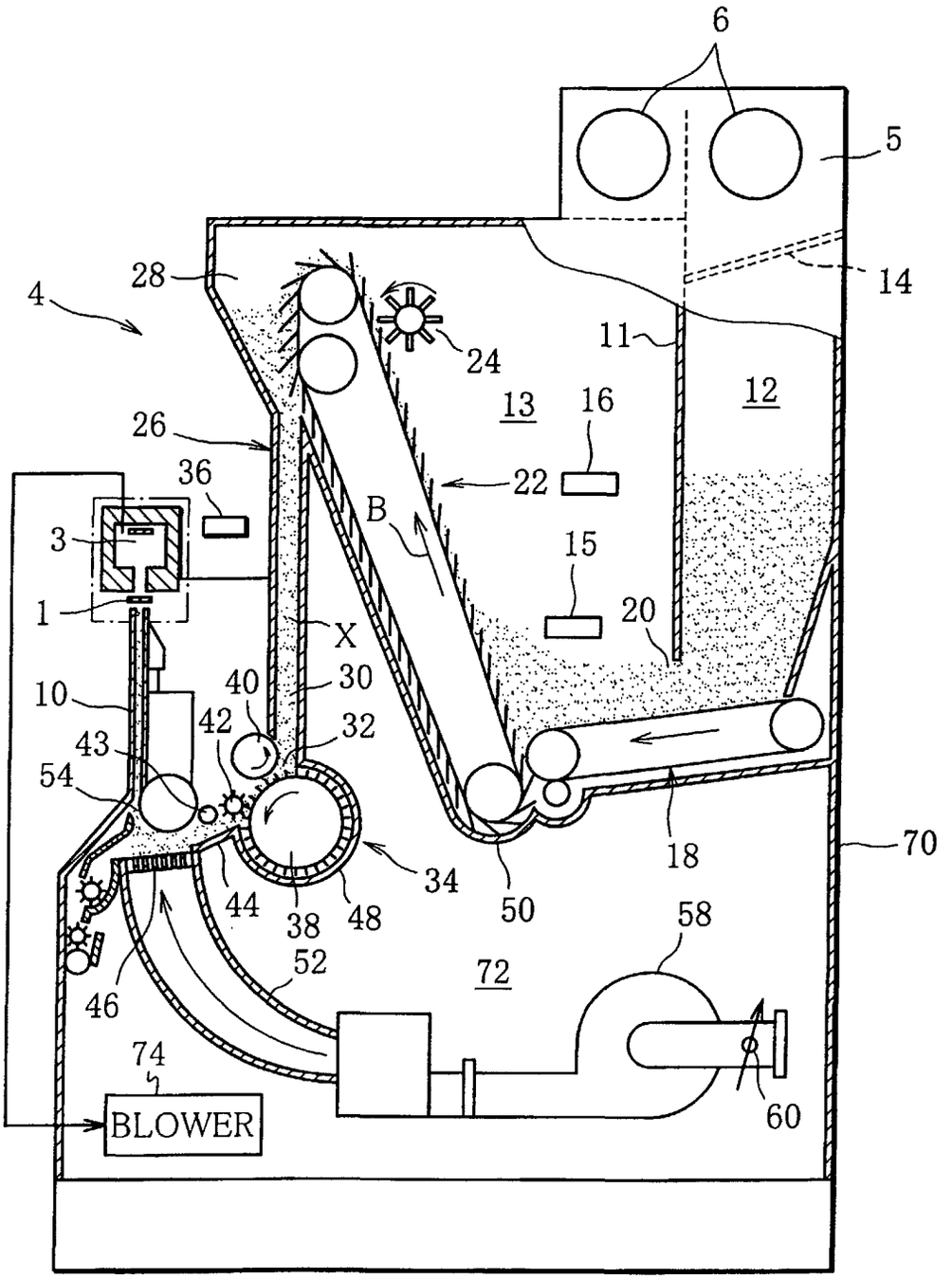
6
5
14
28
4
24
11
12
13
16
26
22
36
B
3
15
1
X
20
10
40
30
42
32
43
54
18
70
34
44
38
48
50
58
52
72
46
74
BLOWER
60

FIG. 3

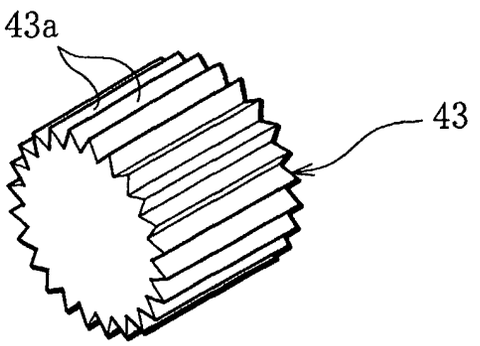

FIG. 4

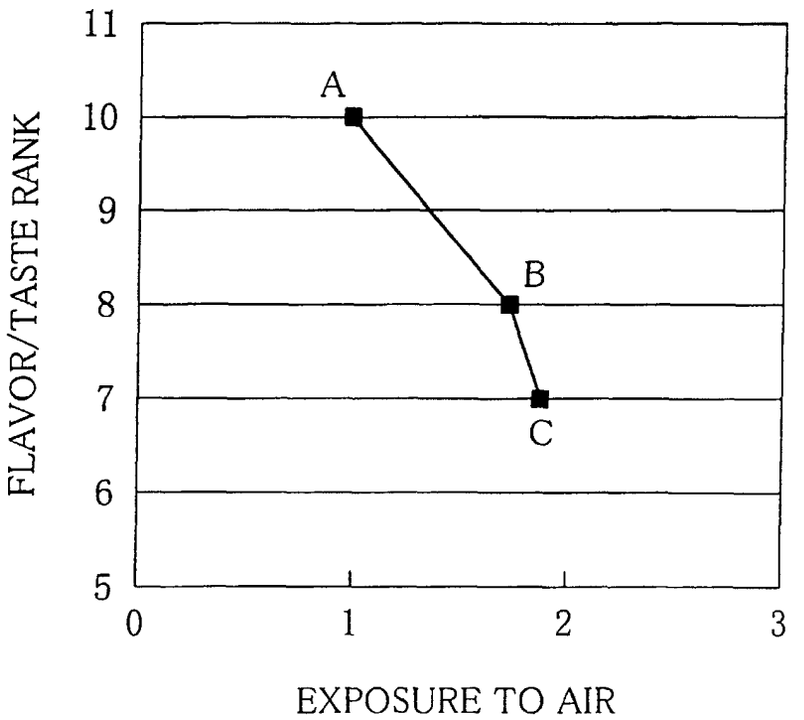

INTERNATIONAL SEARCH REPORT

International application No.
PCT/JP00/03670

A. CLASSIFICATION OF SUBJECT MATTER
Int.Cl[7] A24C 5/39

According to International Patent Classification (IPC) or to both national classification and IPC

B. FIELDS SEARCHED

Minimum documentation searched (classification system followed by classification symbols)
Int.Cl[7] A24C 5/39

Documentation searched other than minimum documentation to the extent that such documents are included in the fields searched
Jitsuyo Shinan Koho 1926-1996 Toroku Jitsuyo Shinan Koho 1994-2000
Kokai Jitsuyo Shinan Koho 1971-2000 Jitsuyo Shinan Toroku Koho 1996-2000

Electronic data base consulted during the international search (name of data base and, where practicable, search terms used)

C. DOCUMENTS CONSIDERED TO BE RELEVANT

Category*	Citation of document, with indication, where appropriate, of the relevant passages	Relevant to claim No.
X Y A	US, 5967146, A (Japan Tobacco Inc.), 19 October, 1999 (19.10.99) & JP, 8-214856, A & EP, 727157, A1	1,4 2,3,6 5
Y	US, 4491138, A1 (Molins, PLC.), 01 January, 1985 (01.01.85) & JP, 58-126776, A & GB, 2114419, A & FR, 2519517, A & DE, 3300957, A & IT, 1164560, A	2
Y	JP, 61-224977, A (JAPAN TOBACCO INC.), 06 October, 1986 (06.10.86) (Family: none)	3
Y	US, 5901709, A1 (Hauni Maschinenbau Aktiengesellschaft), 23 October, 1996 (23.10.96) & JP, 63-167781, A & CN, 1145755, A & DE, 19514925, A & EP, 738477, A1	6
Y	GB, 2199230, A (Decoufle S.a.r.l.), 06 June, 1988 (06.06.88) & JP, 63-167781, A & IT, 8722916, A & FR, 2608019, A	6

☐ Further documents are listed in the continuation of Box C. ☐ See patent family annex.

* Special categories of cited documents:
"A" document defining the general state of the art which is not considered to be of particular relevance
"E" earlier document but published on or after the international filing date
"L" document which may throw doubts on priority claim(s) or which is cited to establish the publication date of another citation or other special reason (as specified)
"O" document referring to an oral disclosure, use, exhibition or other means
"P" document published prior to the international filing date but later than the priority date claimed
"T" later document published after the international filing date or priority date and not in conflict with the application but cited to understand the principle or theory underlying the invention
"X" document of particular relevance; the claimed invention cannot be considered novel or cannot be considered to involve an inventive step when the document is taken alone
"Y" document of particular relevance; the claimed invention cannot be considered to involve an inventive step when the document is combined with one or more other such documents, such combination being obvious to a person skilled in the art
"&" document member of the same patent family

Date of the actual completion of the international search	Date of mailing of the international search report
16 August, 2000 (16.08.00)	29 August, 2000 (29.08.00)
Name and mailing address of the ISA/ Japanese Patent Office	Authorized officer
Facsimile No.	Telephone No.

Form PCT/ISA/210 (second sheet) (July 1992)