Oct. 11, 1938. G. P. REINTJES 2,132,517

ARCH NOSING

Filed Aug. 10, 1936 2 Sheets-Sheet 1

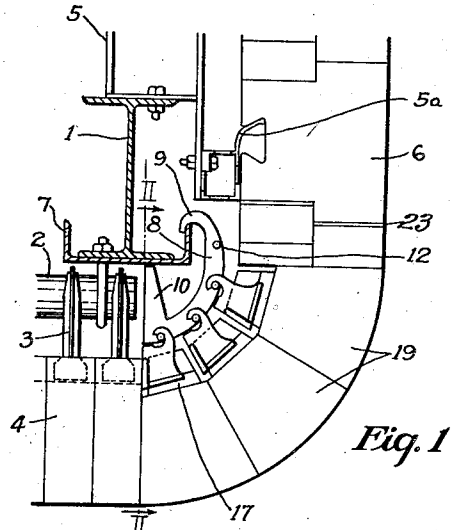

Fig. 1

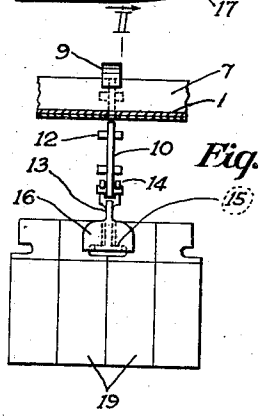

Fig. 2

Fig. 3

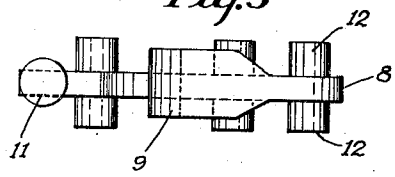

Fig. 4

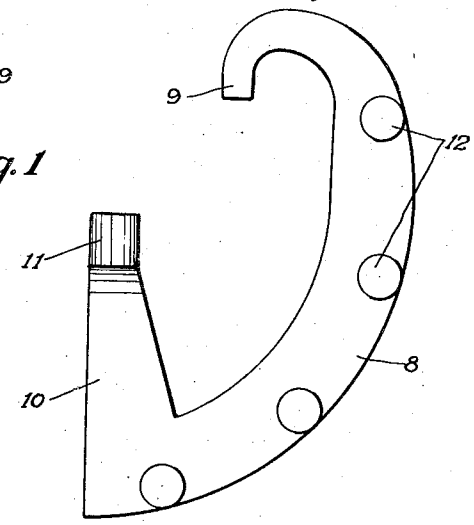

Fig. 5

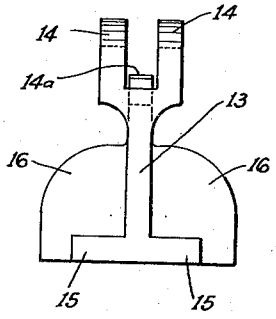

Fig. 6

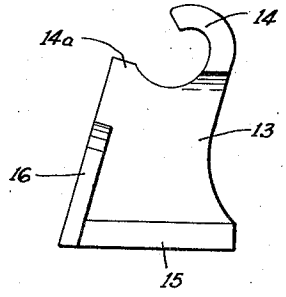

Fig. 7

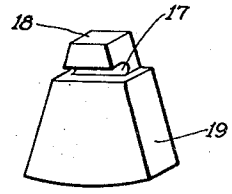

INVENTOR.
Geo. P. Reintjes
BY
Thorpe & Thorpe ATTORNEYS.

Oct. 11, 1938. G. P. REINTJES 2,132,517

ARCH NOSING

Filed Aug. 10, 1936 2 Sheets-Sheet 2

Fig. 8

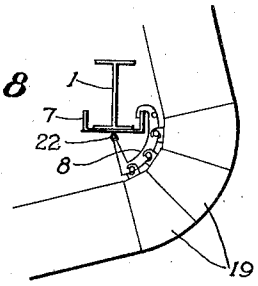

Fig. 9

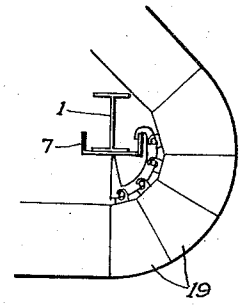

Fig. 10

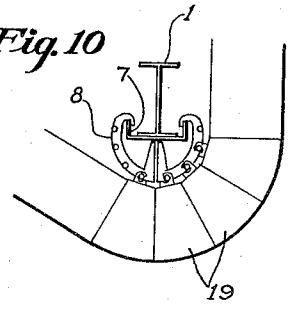

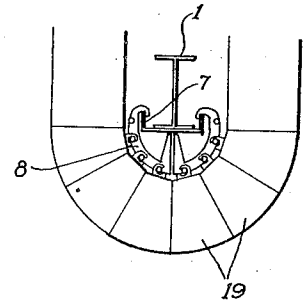

Fig. 11

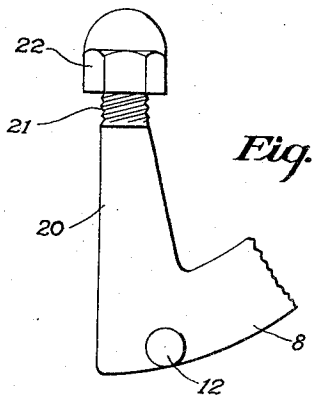

Fig. 12

INVENTOR.
Geo. P. Reintjes
BY
Thorpe & Thorpe ATTORNEYS.

Patented Oct. 11, 1938 2,132,517

UNITED STATES PATENT OFFICE

2,132,517

ARCH NOSING

George P. Reintjes, Kansas City, Mo.

Application August 10, 1936, Serial No. 95,128

14 Claims. (Cl. 110—99)

This invention relates to furnace arch nosing and involves the general type of rocking suspension disclosed in my application for patent filed October 25, 1935, Serial No. 46,702, but constitutes an improvement thereon by providing for adjustably limiting the rocking movement of the suspension brackets in one direction so that the same bracket may be used for a multiplicity of arch and wall combinations without more than two tile shapes, namely a 30° and a 45° wedge nosing tile.

Another object of the invention is to provide a nosing suspension of such type that it will automatically accommodate itself transversely of the furnace, the brackets being freely sliding and pendantly supported from a beam or the like, bridging the furnace for the support of the nosing.

A further object of the invention is to provide a novel hanger construction for pivotal mounting on the bracket for respectively preventing inward and downward movement of the tile, so that the tile of each horizontal row are independently held by their hangers in proper radial position without overloading the lower tile of a nosing.

A still further object of the invention is to produce a nosing construction in which the nosing tile are arranged in horizontal and vertical rows, it being possible to replace any tile in the nosing by displacement only of the tiles singly or in pairs of that particular vertical row.

With the general objects named in view and others as will hereinafter appear, the invention consists in certain novel and useful features of construction and organization of parts as hereinafter described and claimed; and in order that it may be fully understood, reference is to be had to the accompanying drawings, in which:—

Figure 1 is an elevational view of one end of an arch supporting beam extending transversely of a furnace, showing fragments of the rear end of a furnace arch and the lower end of a vertical front wall, said arch and wall being connected by a nosing construction embodying the invention.

Figure 2 is a section on the line II—II of Figure 1, with the two uppermost nosing tile and their hangers removed from position.

Figure 3 is an enlarged top plan view of a supporting bracket embodying the invention.

Figure 4 is a side elevation of the bracket as shown in Figure 2.

Figure 5 is an enlarged elevation of a tile hanger embodying the invention.

Figure 6 is an enlarged elevation of a tile hanger as shown in Figure 5.

Figure 7 is a perspective view of one type of nosing tile adapted to be supported by the hanger of Figures 5 and 6.

Figures 8 to 11 inclusive are fragmental end views of transverse supporting beams, each illustrating different combinations between arches, nosings and walls, which may be formed with the tile bracket and hanger of the invention.

Figure 12 is a fragmental side elevation of the abutment end of the bracket shown in Figure 4, as it may be constructed for adjustably maintaining the angle of the bracket to suit the arch and wall angles to be joined.

In the said drawings, where like reference characters identify corresponding parts in all of the figures, 1 represents a supporting beam for the nosing, arch and wall. As shown in Figure 1, a series of arch supports 2 are carried by hangers from said beam and suspended in spaced relation from the supports 2 are a series of hangers 3 which detachably carry roof tile 4, at their lower ends. Mounted on top of the beam 1 are vertical buck-stays 5 to which horizontal tile hangers 5a are secured for detachably engaging the rear faces of wall tiles or blocks 6.

In the construction as shown in the present embodiment of the invention, a channel iron 7 underlies and is secured to the beam 1, and hooked over a flange thereof for free rocking suspension and longitudinal sliding movement, are sector-like brackets 8 arranged in spaced relation for the full width of the furnace, one bracket coming between each pair of sidewise abutting nosing tile, as illustrated herein. The upper ends of the brackets 8 terminate in open suspension hooks 9, and the body of the brackets adjacent the hooks have an abutment leg 10 adapted for contact with the underside of the supporting member 7.

If desired, the upper end of the leg 10 may be cylindrical as at 11, and such cylindrical portion may be threaded as at 21 (Figure 12), to receive an adjustable abutment nut 22. By providing for adjusting the angle, it will be apparent that the bracket is of universal character and that a nosing may be produced as shown in Figures 8 to 11 to suit varying relationships between arches and walls without a plurality of differently shaped wedge nosing tile.

Projecting from opposite sides of the sector-like bracket 8 and in arcuate relation to each other, are a series of spaced lugs or studs 12 to detachably receive tile hangers. The tile hangers

of the invention comprise body or flange portions 13, which at their upper ends, terminate in a pair of spaced hooks 14, the distance between said hooks being such as to receive the flat body portion of the bracket 8 and permit the hooks to engage the opposite studs 12 of said bracket for rocking movement thereon. The radial projection of the brackets to prevent their unimpeded downward rocking and possible detachment of their hooks from the studs, is guarded against through contact of abutment portions 14a on the hangers with the front edge of the bracket 8 as illustrated. Formed integrally with the flat body portion 13 of the hanger and projecting in opposite directions therefrom, are two sets of flanges 15 and 16, the flanges 15 being received within notches 17 formed in the reduced outer end 18 of wedge-shaped nosing tile 19. Each hanger engages with a pair of tile, as the devices are here illustrated, the flange 15 preventing movement of the tile inward into the furnace, and the flange 16 preventing movement of the tile nosing downwardly around the circumference of the curve established by the arcuate relationship of the parts so that there shall be no overloading of the underlying tile. It will also be evident that instead of having each hanger engage a pair of tile, the tile may be formed with T-shaped slots for receiving the flange 15, so that each hanger shall individually support a single tile instead of supporting the opposite sides of a pair of tile.

With a nosing construction of the invention it will be evident that the transverse arch support may be a continuous bridging member and does not have to be specially formed or fabricated for the support of nosing brackets at predetermined distances apart. Thus with the present construction the entire nosing may shift to one side or the other, transversely of the furnace, to accommodate any unusual expansion conditions which may arise. In addition to thus accommodating lateral expansion of the nosing, the brackets of the invention are free to swing or rock on the transverse support to accommodate longitudinal expansion of the arch. Each hanger is also free for limited upward rocking movement around the axis of its supporting studs. With the construction shown and described it will be further noted that the uppermost nosing tile may support bricks or the like forming an offset expansion joint 23 underlying the wall. It has been found that by individually locking each nosing tile against unlimited downward movement around the curvature established by the nosing, the construction possesses the advantage of protecting or avoiding overloads applied to the lowermost tile, or the possible unthreading or detaching of all of the tile due to an arch or nosing failure which sometimes occurs when there is no stop member.

From the above description it will be apparent that I have produced a construction which embodies all of the features of advantage set forth as desirable and while I have described and illustrated the preferred embodiment of the invention, it is to be understood that I reserve the right to all changes falling within the spirit of the invention and without the ambit of the prior art.

I claim:—

1. In furnace construction, a transverse support bridging the width of a furnace, a series of spaced nosing brackets slidingly and rockingly engaging the support to permit self-adjustment longitudinally of and arcuately around said support, a series of tile supporting hangers projecting in radial relation from each bracket and mounted for rocking movement upwardly but limited in their downward rocking movement, and tile carried by said hangers.

2. In furnace construction, a transverse support bridging the width of a furnace, a series of spaced nosing brackets slidingly and rockingly engaging the support to permit self-adjustment longitudinally of and arcuately around said support, a series of tile supporting hangers projecting in radial relation from each bracket, and tile carried by said hangers, each tile being independently held against inward and downward movement.

3. In a furnace nosing, a horizontal support, a sector-like bracket carried by the support, and a series of radially arranged rockingly mounted tile hangers projecting from the bracket, each of said hangers having a lug adapted to engage one side face of a tile to prevent it from moving inwardly and having a second lug underlying the tile to hold such tile against gravitating downwardly.

4. A tile supporting bracket having an open suspension hook adapted to be engaged over a horizontal support and allow the bracket to rock thereon, lugs arcuately arranged on said tile supporting bracket and an adjustable abutment portion on said bracket for changing the angle of the bracket with relation to the support.

5. A sector-like tile supporting bracket having one end terminating in a downwardly facing hook for free rocking suspension of the bracket from a horizontal support, the other end of the bracket terminating in an adjustable abutment portion for changing the angle of the bracket in relation to the support, the horizontal and vertical planes of the face of the abutment being respectively below and outwardly of the corresponding planes of the hook end.

6. A furnace nosing comprising a bracket, a plurality of equi-spaced hangers rockingly carried by the bracket and arranged in horizontal rows, said rows of hangers being horizontally and vertically offset in fan-tail relation with respect to each other, each hanger having a flange substantially tangential to the arc of their fan-tail relation and adapted to engage one side face of a tile to prevent inward movement of such tile, and a second flange on each hanger for underlying its tile to prevent same from gravitating downwardly in the arc of the offset relation between the hangers.

7. A nosing construction for furnaces comprising the combination of a bracket having a plurality of projecting lugs spaced apart in arcuate relation, a plurality of hangers, each being rockingly engaged with a bracket lug and having a stop portion for contacting its bracket to limit rocking movement of the hanger in one direction, and each of said hangers having a flange for engaging the side face of a tile and a second flange for underlying such tile.

8. In a furnace, the combination of a beam transversely bridging the furnace, a tile supporting bracket having an open suspension hook adapted to be engaged over the beam and allow the bracket to rock thereon, lugs arcuately arranged on said tile supporting bracket, and an abutment portion on said bracket to limit rocking movement thereof in one direction by contacting the underside of said beam.

9. In a furnace, the combination of a beam transversely bridging the furnace, a sector-like tile supporting bracket having one end terminat-

ing in a downwardly facing hook for free rocking suspension of the bracket from the beam, the other end of the bracket terminating in an abutment portion so arranged that the horizontal and vertical planes of the point of contact of the abutment with the beam are respectively below and outwardly of the corresponding planes of the hook end.

10. In a nosing construction for furnaces, the combination of a supporting beam transversely bridging the furnace, a series of spaced brackets longitudinally slidable on and rockingly suspended from the beam, and a plurality of tile arranged in fan-tail relation detachably related to and supported from said brackets.

11. In a nosing construction for furnaces, the combination of a supporting beam transversely bridging the furnace, a series of spaced brackets longitudinally slidable on and rockingly suspended from the beam, tile hangers carried by each bracket and projecting therefrom in fan-tail relation, and nosing tile detachably supported by said hangers.

12. In a nosing construction for furnaces, the combination of a supporting beam transversely bridging the furnace and having an upstanding extension, a series of spaced brackets longitudinally slidable on and rockingly suspended from the upstanding portion of the beam and having a stop portion for contacting the body of the beam to limit rocking movement in one direction, and tile arranged in fan-tail relation detachably related to and supported from said brackets.

13. In a nosing construction for furnaces, the combination of a supporting beam transversely bridging the furnace and having an upward extension, a series of spaced brackets longitudinally slidable on and rockingly suspended from the upward extension of the beam, and having a stop portion for contacting the body of the beam to limit rocking movement in one direction, tile hangers carried by each bracket and projecting therefrom in fan-tail relation, and nosing tile detachably supported by said hangers.

14. In a furnace construction, the combination of a supporting beam transversely bridging the furnace, a series of spaced brackets rockingly suspended from the beam and having stop portions for contacting the beam to limit rocking movement in one direction, nosing tile arranged in fan-tail relation detachably related to and suspended from said brackets, and a furnace arch abutting the lowermost nosing tile and upon expansion causing the brackets to rock on the beam support independently of the arch support.

GEORGE P. REINTJES.