Feb. 19, 1957 E. W. WILSON 2,781,621

BANDING APPARATUS FOR FORMING PACKAGES

Filed May 20, 1954 2 Sheets-Sheet 1

Fig. 1.

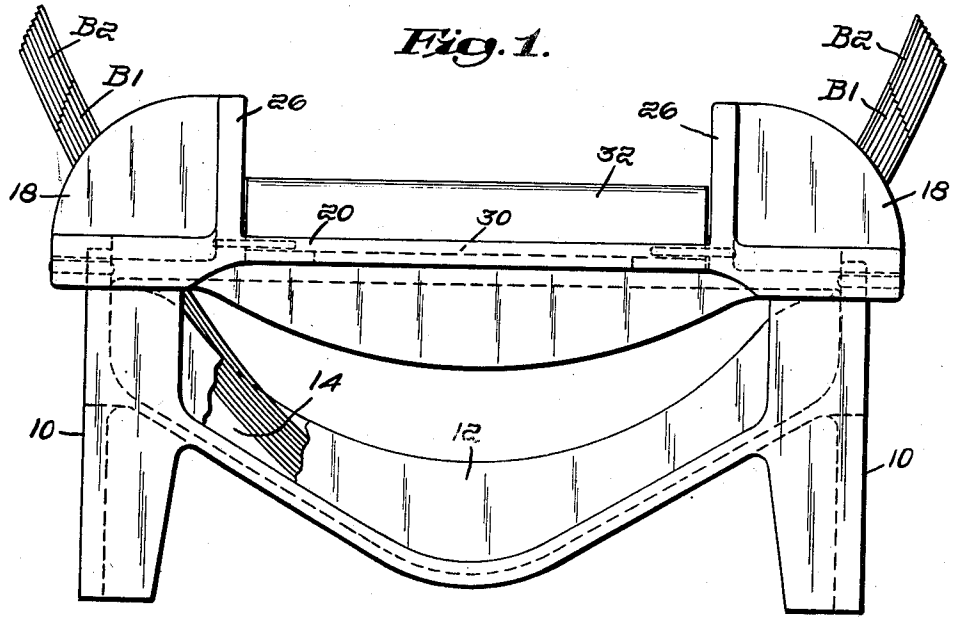

Fig. 2.

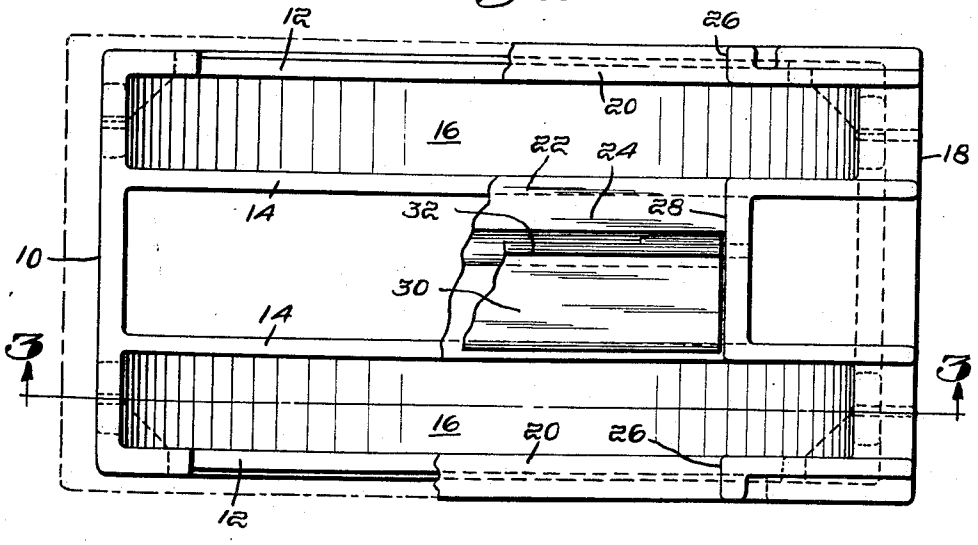

Inventor:
Edward W. Wilson,
by Emery, Booth, Townsend,
Miller & Weidner Attys

Feb. 19, 1957 E. W. WILSON 2,781,621

BANDING APPARATUS FOR FORMING PACKAGES

Filed May 20, 1954 2 Sheets-Sheet 2

Fig. 3.

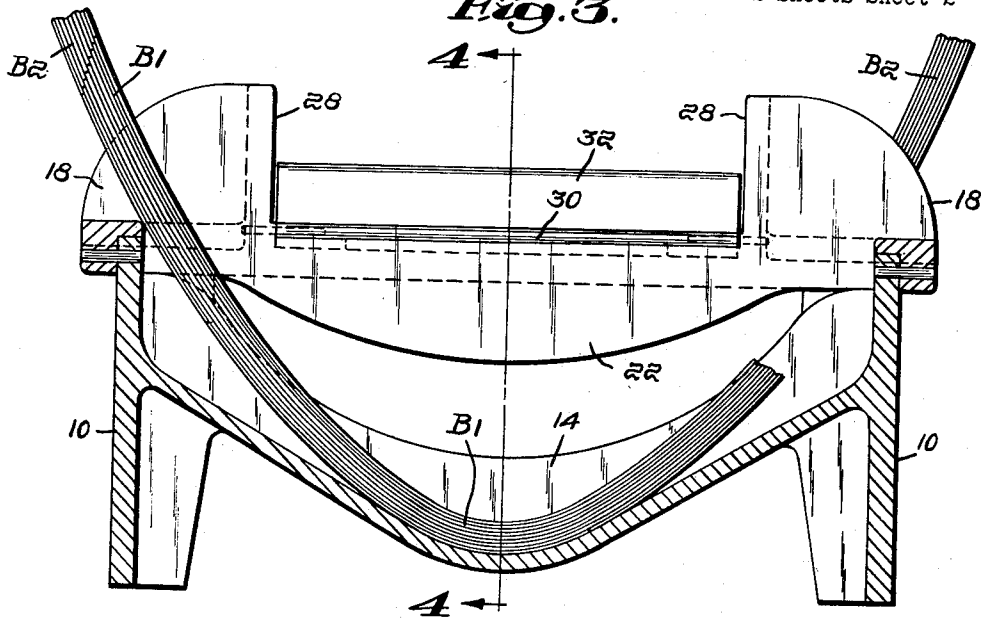

Fig. 4.

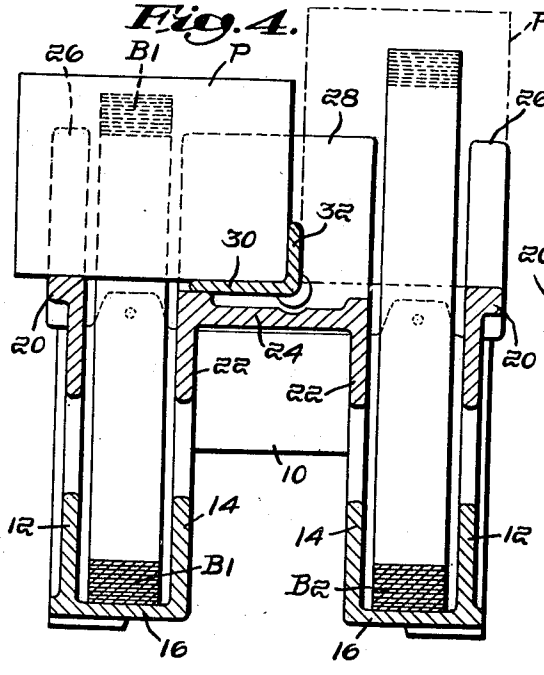

Fig. 5.

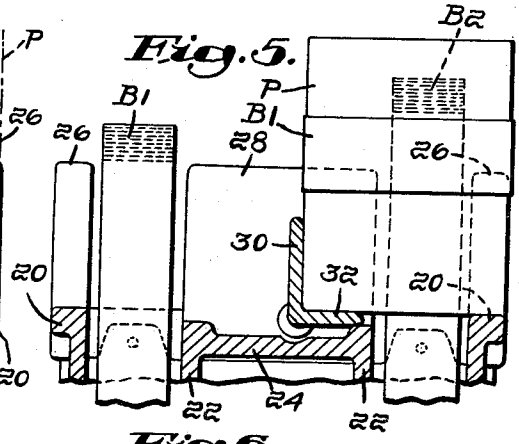

Fig. 6.

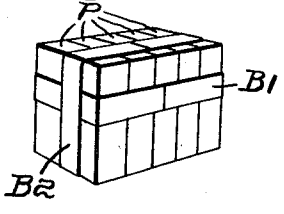

Inventor:
Edward W. Wilson,
By Emery, Booth, Townsend, Miller & Alexander Attys

United States Patent Office 2,781,621
Patented Feb. 19, 1957

2,781,621

BANDING APPARATUS FOR FORMING PACKAGES

Edward W. Wilson, Nashua, N. H., assignor to Nashua Corporation, Nashua, N. H., a corporation of Massachusetts

Application May 20, 1954, Serial No. 431,185

5 Claims. (Cl. 53—198)

This invention relates to an appliance for use in assembling, by means of encircling bands, a plurality of small packages or other objects to serve as a unit of sale, the work being done by hand. The invention finds a particular application for assembling a number of packs of cigarettes to form a "less carton lot." The particular mechanism which I have illustrated in the accompanying drawings is specifically designed for use with cigarette packages and, for convenience, but without limiting the invention I will describe it in terms of such an application.

It will be recalled that popular brands of cigarettes at the present time are sold in packs of twenty, in tightly fitting flexible wrappings of foil and paper, and that ten such packages are ordinarily packaged as a carton. A carton is a rather considerable supply unless the purchaser is going to take them directly to his home or office and the price not inconsiderable. On the other hand, twenty cigarettes are not much of a ration for a steady cigarette smoker. Particularly in self-service stores it would be desirable to have a package of intermediate size. In that case the purchaser would be likely to buy such a package. The sale would be handled as a single transaction with resulting economy. Also the temptation to dispose of a single package in the pocket or handbag without exhibiting it at the checking out station would be done away with.

The requirements of the ordinary retail outlet would not justify the use of an automatic machine, but facilities whereby, say, five packages of cigarettes could be neatly and firmly united in a single unit, the work being done by regular employees during slack periods, are desirable.

My invention will be well understood by reference to the following description of the illustrative embodiment thereof shown, by way of example, in the accompanying drawings wherein:

Fig. 1 is a side elevation with a part broken away;

Fig. 2 is a plan, with part of the top member broken away. The bands are not shown;

Fig. 3 is a section on line 3—3 of Fig. 2, but including the bands partly broken away;

Fig. 4 is a section on line 4—4 of Fig. 3 showing cigarette packs in place ready for banding;

Fig. 5 is a fragmentary view similar to part of Fig. 4 showing a later stage of the banding operation; and

Fig. 6 is a perspective of the banded package on a smaller scale.

In Fig. 6 there is shown a package comprising five packs P of cigarettes (half a carton) joined by the encircling bands B–1 and B–2 of paper, which are in relatively perpendicular planes, one encircling the packs between their smaller ends and one crossing such smaller ends transversely, the two holding the packs neatly in alignment. Such a package may be quickly made with the appliance of the kind shown in the other figures and which will now be described. The appliance shown is of cast aluminum and to facilitate its production is

formed from two castings, a base member and a top member. Herein the base member comprises two end frames **10**, joined by two outer, longitudinals webs **12**, and two spaced inner webs **14** parallel thereto, each pair of webs **12** and **14** at opposite sides of the center line defining an open topped pocket closed by a bottom **16** which, as best seen in Fig. 3, is concave upwardly, herein as a curve, for a purpose to be described, and the upper edges of the webs may be similarly concaved as shown. The inner webs **14** are relatively widely spaced at opposite sides of the center line. The upper member (partly broken away in Fig. 2), which rests upon the base in the manner of a lid, comprises two end frames **18**, joined by two lateral webs **20**, which lie vertically above the side webs **12** of the body proper and a central broad web which may be of generally inverted channel form, as seen in Fig. 4, having depending flanges **22** substantially coplanar with the webs **14** of the base member and top portion **24** which overlies the space between the two inner webs **14**, as likewise seen in that figure. Toward either end of the appliance, but inset from the frames **18**, the webs **20** and the central member have elevated portions **26** and **28** respectively, presenting inwardly facing lateral shoulders for a purpose to be described. The open tops of the pockets in the lower member are exposed between the top **24** of the central member and the lateral webs **20**, and these pockets extend outwardly at either end beyond the shoulders **26** and **28**, as clearly seen in Fig. 3. At either side the space between the elevated portions **26** at the outer side and **28** at the inner side bounded at the end by the frames **18** are above the end portions of the pockets in the lower member and serve as continuations thereof, the whole when the assembly is considered forming a concaved open-topped pocket which extends along the member **14** below the level of the same and upwardly above the same outwardly of the lateral shoulders formed by the elevated portions **26** and **28**.

An angular member comprising relatively perpendicular flanges **30** and **32** is pivoted at the intersection of these flanges above the part **24** and between the two shoulders **28**. The top of portion **24**, as seen in Figs. 4 and 5, may be parallel to, but somewhat below, the level of the tops of webs **20**, so that when the angular member is turned so that one of its flanges, **30** or **32**, points toward a web **20** the upper surface of that flange is substantially coplanar with the top surface of that web.

The pockets provide each for the reception of a stack of paper bands B–1 and B–2 to be joined around an assembled group of "packs," two bands being applied in relatively perpendicular planes. The upwardly concave form of the pockets gives such a stack of bands a bend when it is placed therein. The central portion of the stack is below the tops of webs **20** and of flanges **30** and **32** when the latter are horizontal. The end portions extend upwardly, outwardly beyond the shoulders of **26** and **28**, and are supported laterally by the end frames **18**. When the stack is thus bent its end edges are fanned out, the ends of the individual bands being offset so that the top one may easily be separated from the rest.

After the two pockets are filled the operation of banding a half carton of cigarettes may be effected as follows. Referring to Fig. 1 the angular member is adjusted so that the flange **32** extends upwardly and the flange **30** rests with its top coplanar with the supporting surface provided by the top of the adjacent web **20**. Five packs are then placed on this flange and this supporting surface with their longer sides bridging the pocket between them. The upstanding shoulders **28** and **26** at the right, for instance, provide a guide for stacking these together, while the upstanding flange **32** aligns the ends

of the packages. This is illustrated in Fig. 4. The operator will then grasp with his finger the two ends of the top bands B–1 in the subjacent pocket. Its ends are bent up over the group of packs, one end held firmly and the other brought down on top of it and joined thereto.

While the bands may be joined in any desirable way as by any suitable adhesive means, it may be anticipated that usually the bands will be of the type described in the patent to Lane 2,000,763, May 7, 1935, the two ends of each band being coated on its opposite faces respectively with rubber latex or similar material, which will adhere to a like coating to form a joint, although alone it will not stick to exterior objects.

The five packs are now joined by a band B–1 encircling their smaller cross-section in the manner of a sleeve. To complete the package the joined group of packs may be tilted over away from the reader (viewing Fig. 1) to the position of Fig. 5, the angular member comprising the flanges **30** and **32** and moving with them, and the group of packages is now positioned as seen in Fig. 5 with their shorter ends supported by the flange **32** and by the other web **20** in bridging relation to the other band-holding pocket, and the group of packages is aligned by the flange **30** which now extends vertically. A band B–2 from the other pocket is then secured about the longer dimensions of the package at right-angles to the previous band, thus securing the several packs firmly together as a unit, as seen in Fig. 6.

Referring to Figs. 4 and 5, it will be noted that the angular member comprising the flanges **30** and **32** is pivoted at one side of the central plane of the device and the two flanges are unequal in length. This is because the cigarette packs have a longer and a shorter side and the construction permits them to be positioned in bridging relation to the tops of the band-receiving pockets without obstruction of the tops of the latter, and with the support provided for by the webs **20** adjacent the outer parts of the sides above them, as will be clear from Figs. 4 and 5. An overhang would not be objectionable provided the center of gravity was properly located and the point of application suitable. Thus, while I have illustrated cigarette packs for the common, shorter type of cigarette, the same appliance could be used for banding together so-called king-size packages. It is obvious that a package comprising a number of packs different from five could be similarly made up.

I am aware that the invention may be embodied in other specific forms without departing from the spirit or essential attributes thereof, and I therefore desire the present embodiment to be considered in all respects as illustrative and not restrictive, as is in fact clear in several matters from the description itself. Reference is to be had to the appended claims to indicate those principles of the invention exemplified by the particular embodiment described and which I desire to secure by Letters Patent.

I claim:

1. An appliance for facilitating banding of a plurality of objects comprising a base member with end frames, spaced webs between the frames defining two spaced open-topped pockets, and upwardly concaved bottoms for said pockets, a top member seated on the base member and having webs extending along the outer sides of said pockets and between the two to expose the tops of the pockets between them, said webs being elevated adjacent the ends of the member to provide laterally positioned shoulders, a member having two angularly disposed flanges, the member being rotatably supported at the junction of its flanges at the middle portion of the top and having two positions of adjustment in each of which one flange extends toward one of the side webs and provides a supporting surface substantially coplanar with the top of the web and the other extends vertically to provide an aligning guide for objects supported in bridging relation across the open top of a pocket by the other flange and by the web toward which it extends.

2. An appliance for facilitating banding of a group of like objects provided with a pair of spaced longitudinally-extending open-topped pockets in each of which a stack of bands may be positioned and having at either side of said pockets horizontal supporting surfaces and between the pockets a member having angularly related flanges, said member being movably mounted for alternative disposition in two positions in one of which one of said flanges is coplanar with one of said surfaces to cooperate therewith to support the objects in crossing relation to the adjacent pocket while the other extends upwardly to engage the ends of such crossing objects and to align the same, whereas in the other position said other flange is coplanar with the other surface and said one flange extends upwardly.

3. An appliance for facilitating banding of a group of like objects provided with a pair of spaced longitudinally-extending open-topped pockets in each of which a stack of bands may be positioned and having at either side of said pockets horizontal supporting surfaces and between the pockets a member having angularly related flanges, said member being movably mounted for alternative disposition in two positions in one of which one of said flanges is coplanar with one of said surfaces to cooperate therewith to support the objects in crossing relation to the adjacent pocket while the other extends upwardly to engage the ends of such crossing objects and to align the same, whereas in the other position said other flange is coplanar with the other surface and said one flange extends upwardly, there being an end stop adjacent at least one end of the angular member for positioning a group of objects between the ends of the bands.

4. An appliance for facilitating banding of a group of like objects provided with a pair of spaced longitudinally-extending open-topped pockets in each of which a stack of bands may be positioned, the pockets having end walls to maintain such a stack in flexed position with the end portions of the bands upwardly extending and in fanned-out relation, the appliance having at either side of said pockets horizontal supporting surfaces and between the pockets a member having angularly related flanges, said member being movably mounted for alternative disposition in two positions in one of which one of said flanges is coplanar with one of said surfaces to cooperate therewith to support the objects in crossing relation to the adjacent pocket while the other extends upwardly to engage the ends of such crossing objects and to align the same, whereas in the other position said other flange is coplanar with the other surface and said one flange extends upwardly.

5. An appliance for facilitating manual banding of a group of like objects provided with an open-topped pocket to receive from above the middle portion of a stack of bands longer than the pocket, the pocket being concaved upwardly to bend the stack whereby the end portions of the bands are directed upwardly and fanned out to facilitate manual separation of individual bands from the stack, supporting surfaces at either side of the pocket between the ends thereof to support objects in crossing relation thereto and a side stop and an end stop both projecting above said surfaces, for cooperating with such objects to position the same.

References Cited in the file of this patent

UNITED STATES PATENTS

898,273	Silger	Sept. 8, 1908
1,190,848	Batdorf	July 11, 1916
1,687,488	Becker	Oct. 16, 1928