R. HENRY.

ADJUSTABLE SUPPORTS FOR LAMP REFLECTORS.

No. 193,705. Patented July 31, 1877.

Fig. 1.

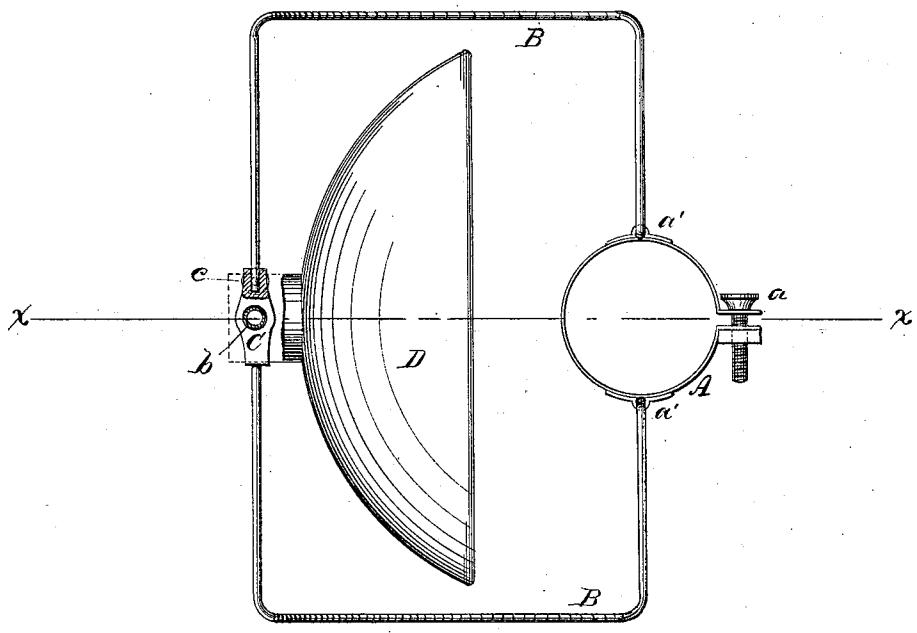

Fig. 2.

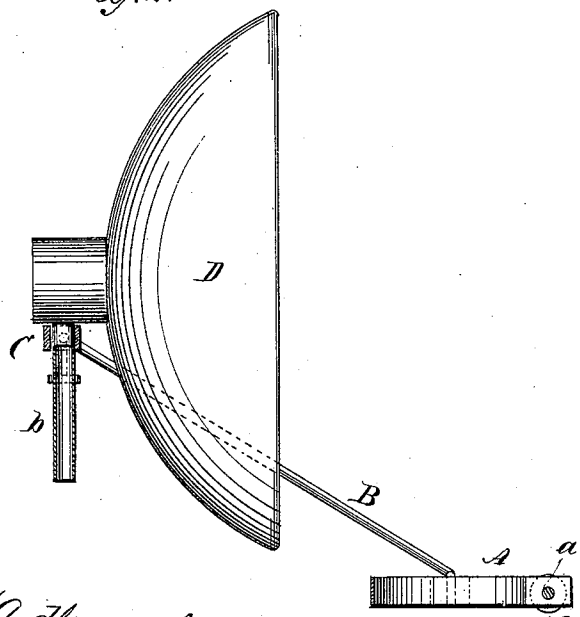

WITNESSES:

Francis M. Ardle.

J. H. Scarborough.

INVENTOR:

BY R. Henry.

Munn & Co

ATTORNEYS.

N. PETERS, PHOTO-LITHOGRAPHER, WASHINGTON, D. C.

UNITED STATES PATENT OFFICE.

RICHMOND HENRY, OF GLASSBOROUGH, NEW JERSEY.

IMPROVEMENT IN ADJUSTABLE SUPPORTS FOR LAMP-REFLECTORS.

Specification forming part of Letters Patent No. **193,705**, dated July 31, 1877; application filed June 11, 1877.

To all whom it may concern:

Be it known that I, RICHMOND HENRY, of Glassborough, county of Gloucester, and State of New Jersey, have invented a new and useful Improvement in Adjustable Support for Lamp-Reflectors, of which the following is a specification:

Figure 1 is a plan view of my improved adjustable support. Fig. 2 is a side elevation, in section, on line *x x* in Fig. 1.

Similar letters of reference indicate corresponding parts.

The object of my invention is to provide an adjustable frame for attaching a reflector to an ordinary lamp or gas-burner.

In the drawing, A is a ring having the adjusting-screw *a*, by which its size may be varied to fit any ordinary lamp-collar or gas-burner.

Loops *a'* are attached to the sides of the ring A, for receiving the wires B, which are bent twice at right angles to form a rectangular frame, which is inclined at such an angle as to bring the reflector supported by it into the proper relation with the flame of the lamp or gas-burner.

A socket, C, which receives the shank *b* of the reflector, is drilled to receive the ends of the wires B, and is provided with a set-screw, *c*, which retains the shank of the socket in any position into which it may be turned.

The reflector D is of silvered glass, and is mounted in a socket, to which the shank *b* is attached.

It will be seen that the reflector thus mounted is capable of turning in any direction within certain limits.

Having thus fully described my invention, I claim as new and desire to secure by Letters Patent—

The ring A, having the adjusting-screw *a* and loops *a'*, the wires B, and socket C, having the screw *c*, in combination, substantially as shown and described.

RICHMOND HENRY.

Witnesses:

JOS. H. DUFFIELD,

GEO. S. MOFFETT.