March 31, 1942. E. E. ARNOLD 2,277,836

ELECTRO-HYDRAULIC OPERATOR

Filed Feb. 23, 1939

Fig. 1.

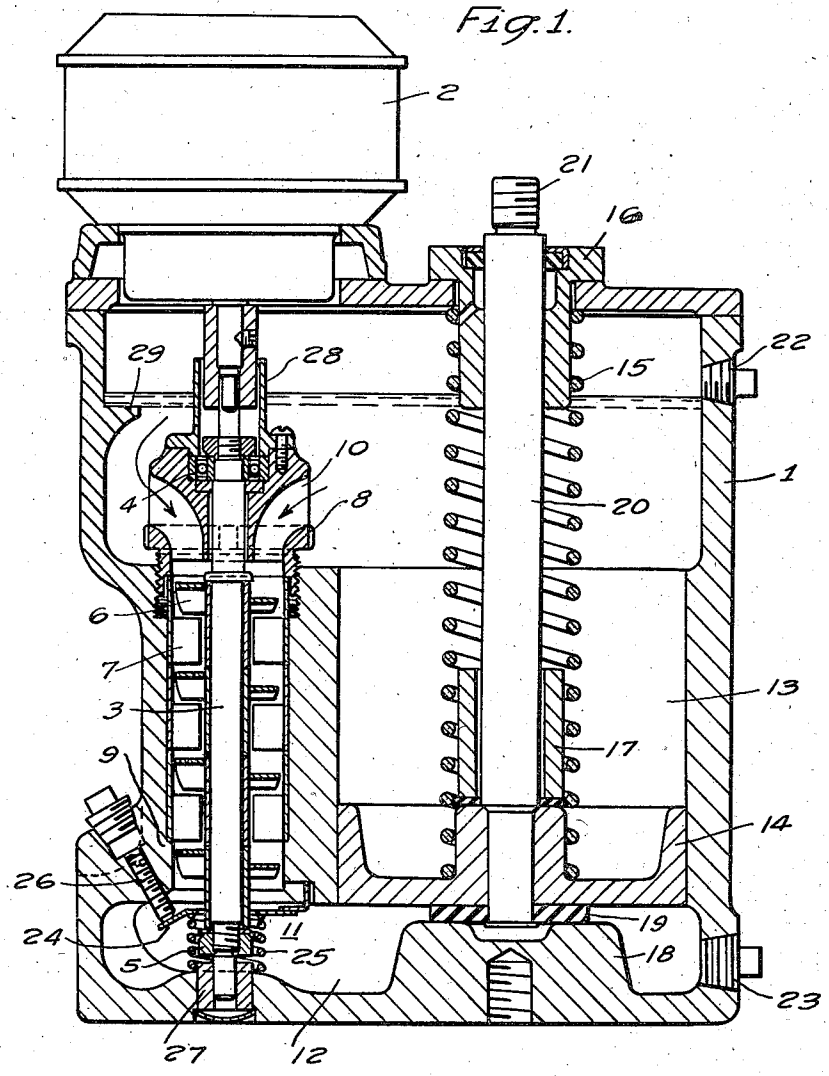

Fig. 2.

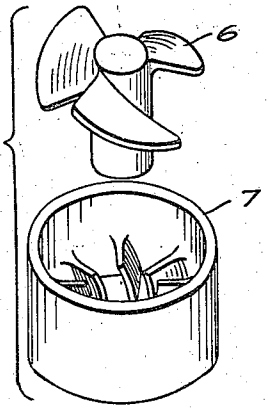

WITNESSES:

E. A. McCloskey.

Wm. J. Ruano

INVENTOR

Edwin E. Arnold.

BY

Paul E. Friedemann

ATTORNEY

Patented Mar. 31, 1942 2,277,836

UNITED STATES PATENT OFFICE

2,277,836

ELECTROHYDRAULIC OPERATOR

Edwin E. Arnold, Pittsburgh, Pa., assignor to Westinghouse Electric & Manufacturing Company, East Pittsburgh, Pa., a corporation of Pennsylvania

Application February 23, 1939, Serial No. 257,940

3 Claims. (Cl. 60—52)

My invention relates to an electro-hydraulic operating means and more specifically to one which converts rotation of a motor shaft into a linear movement of a push rod, thereby effecting a thrust or push which is useful, for example, in operating clutches, brakes, doors and numerous other apparatus.

One object of my invention is to provide an electro-hydraulic operator or "Push Motor" which is simple and rugged in construction and which is of relatively small size, but the output rating of which is relatively high.

Another object of my invention is to provide an electro-hydraulic operator which employs a propeller-type pump instead of a centrifugal pump, for instance, thereby obtaining a higher power output for a given size of electro-hydraulic operator, and which develops a greater thrust in a shorter time interval and which may be reversed to speed up return motion as compared with a centrifugal type electro-hydraulic thrust device.

Another object of my invention is to provide a device, allowing of easy application to various uses by reason of its single push rod extension, relatively small size, and altogether relatively compact construction.

Another object of my invention is to provide a multiple stage propeller pump for an electro-hydraulic operator comprising a number of separate propeller pump units which are longitudinally disposed with respect to one another, the number of propeller pump units being variable, hence providing a propeller pump whose output is nominated merely by addition or subtraction of one or more propeller pump units.

Other objects and advantages will become more apparent from a study of the following specification when considered in conjunction with the accompanying drawing, in which:

Figure 1 is a sectional view of an electro-hydraulic operator employing certain features of my invention; and

Fig. 2 is a perspective exploded view of one of the propeller pump units which forms part of the multiple stage propeller pump.

Referring to Figure 1, numeral 1 indicates a casing or container which is partially filled with fluid, such as oil or the like. Mounted on the top of the casing is an electric motor 2. The electric motor 2 drives a propeller shaft 3 which extends into the pump chamber and which is held in position at its upper end by bearing 4 and is journaled at the bottom thereof by a bearing 31. Rigidly secured to the drive shaft 3 by means of a nut 5 are a number of propeller units 6, each comprising a plurality of substantially radially extending propeller type blades as shown more clearly in Fig. 2. Thus the group of propellers is driven as one with the shaft 3. Each propeller unit includes a complementary stationary guide vane assembly 7 which comprises a ring-shaped element having a plurality of substantially radially inwardly extending guide vanes as shown more clearly in Fig. 2. A follow-up nut assembly 8, also having guide vanes to direct the flow of fluid into the first stage propeller, rigidly clamps all of the stationary guide vanes in place, the lower guide vane assembly being seated on a shoulder 9 machined in the casing for that purpose.

It will be noted that the follow-up nut assembly 8, together with its attached upstanding collar member 28, forms a stationary surface, hence the fluid adjacent thereto is not agitated so as to form a vortex or whirlpool as would be the case if the propeller shaft were unshielded and were directly in contact with the fluid reservoir. To further minimize the tendency for the fluid to become violently agitated or turbulent during operation of the pump, a curved shoulder 29 is provided internally of the casing in order to guide the fluid in the path and direction as shown by the arrow (or in the opposite direction in the event of reversal of the motor).

By varying the number of propeller units, the output of the multiple stage propeller pump can be varied. A plurality of inlet ports 10 are "streamlined" into the follow-up nut assembly to provide efficient flow into the first propeller. An adjustable outlet valve 11 is provided which is situated immediately between the pump discharge and the pressure chamber 12. There are two principal divisions within the casing 1, both of which are preferably cylindrical, the one being the chamber in which the multiple propeller pump is located and the other being the piston or work chamber 13. A piston 14 is slidable within the piston chamber 13. A helical spring 15 surrounds the piston rod 20, and is guided at one end by bushing 16 and at the other end by collar 17. The spring 15 normally urges the piston 14 in a downward direction to aid in its return to normal position after completing an upward movement. Spring 15 may be eliminated if the load is of such character as to afford return of the piston; for example, a spring-operated, motor-released brake, a heavy load lifted against gravity, etc.

The upstanding projection 18 at the bottom of

the casing provides a stop for the piston when returned to normal position. Bushing 16 also acts as a stop member engaging collar 17 in the event that piston 14 has been moved to its upper limiting position. A buffer washer 19 of resilient material is fastened to the bottom of the piston 14 in order to provide cushioning effect as the piston is seated on element 18. The piston rod 20 may be secured by any suitable means such as the threaded projection 21 to any suitable means for connecting to a load resistance, such as a brake, door, etc. Any suitable linkages or power amplifying levers may, of course, be interposed between the piston rod 20 and the load resistance. An inlet plug 22 is provided for filling the casing with fluid while an outlet plug 23 is provided for draining such fluid when desired.

The adjustable outlet valve 11 comprises a valve member 24 which is urged upwardly by a light helical spring 25 so as to engage an adjustable screw or stop member 26 to regulate the back flow and hence the speed of return of the piston to its normal position.

The operation of the device is as follows: When the electric motor 2 is energized and drives the drive shaft 3, it also drives all of the propeller units 6 forcing fluid downwardly in a direction which is substantially parallel to the axis of the drive shaft, this direction of flow being aided by the guiding effect of the stationary guide vanes 7. The fluid pressure developed meets little resistance in passing valve member 24 downwardly, permitting free flow of fluid through the valve into the pressure or working chamber 12, in which chamber sufficient pressure is developed to force piston 14 upwardly against the relatively light restraining action of spring 15, at the same time pushing piston rod 20 upwardly, which, in turn, may operate any suitable device such as a brake (not shown) or other load service. As soon as motor 2 is deenergized and the multiple stage propeller pump no longer functions, either the load, which has been raised, or the spring 15, or both will push piston 14, together with piston rod 20, downwardly finally seating the piston on member 18. In the course of such downward movement of the piston, the fluid in chamber 12 will flow back through the pump to the opposite side as will be obvious. The valve member 24 may be adjusted to cause a restriction to the backward flow of fluid upwardly through the propeller pump. The amount of restriction of the valve 11 is adjustable by adjusting the screw or stop member 26 and the adjustment may be made to correspond to the desired return speed of the piston 14. The return stroke of piston 14 may also be speeded up by reenergizing the motor in reverse direction to its normal operation.

Thus, in accordance with the above-described device, an electro-hydraulic operator is provided which employs a propeller-type pump. Such pump has many advantages over the centrifugal-type pump, as has been outlined in the objects of the invention. The advantages are: The provision of a higher maximum power out-put for a given size which therefore, requires less time for developing larger pressures; the provision of the ability to operate in reverse direction to speed up the return stroke; the provision of a multiple unit structure whose output may be changed by merely varying the number of propeller pump units; and the provision of a simple, rugged construction resulting in a smaller but yet of a higher output rating than a correspondingly rated centrifugally operated pump.

I am, of course, aware that others, particularly after having had the benefit of the teachings of my invention, may devise other devices embodying my invention, and I, therefore, do not wish to be limited to the specific showings made in the drawing and the descriptive disclosure hereinbefore made, but wish to be limited only by the scope of the appended claims.

I claim as my invention:

1. A hydraulic operator including a fluid casing, a pair of substantially cylindrical chambers which are side by side with their axes in parallel relationship within said casing, the adjacent ends of said chambers being in communication to allow flow of fluid therebetween, a piston contained within one of said chambers, a pump including a drive shaft, having its axis parallel to that of the piston and having propeller type blades secured thereto contained within the other of said chambers whereby fluid is forced in a direction parallel to the axis of said drive shaft to create a differential in fluid pressure on opposite sides of said piston thereby imparting motion thereto, a valve which is positioned between the outlet of said pump and said piston for controlling the flow of fluid therebetween and spring means which normally biases said valve in an almost closed or restricted position but which yields and allows opening thereof in response to pressure developed by said pump, and means removed from said piston and immediately adjacent said valve and which extends through said casing immediately adjacent the outlet of said pump for adjusting the amount of normal restriction of said valve.

2. A hydraulic operator including a substantially cylindrical casing containing a fluid, a pair of substantially cylindrical chambers arranged side by side within said casing with their axes parallel to the axis of said casing and with their adjacent ends in communication to allow flow of fluid therebetween, a motor mounted on the top of said casing and having a drive shaft extending into one of said cylindrical chambers, a plurality of longitudinally disposed propeller pump units, each unit comprising a spider element which is sleeved onto and rigidly secured to said drive shaft and whose arms comprise substantially radially disposed propeller-type blades and an adjoining sleeve member which is rigidly secured to the wall of said one of the chambers and which has substantially radially inwardly extending guide vanes, said units being readily detachable and variable in number to change the capacity of the pump without affecting the casing structure, the plurality of propeller pump units comprising alternately arranged spider elements and guide vanes thereby being arranged to force the fluid downwardly in the chamber parallel to the axis thereof, the second of said chambers containing a piston and spring means for normally biasing said piston downwardly into engagement with a lower wall portion of said casing and which is yieldably movable upwardly in response to pressure developed by said pump at the lower end of said substantially cylindrical chambers, and an outlet port containing an adjustable valve for controlling the flow of fluid between the bottom surface of said piston and said one of the chambers.

3. A hydraulic operator including a fluid casing, a pair of cylindrical chambers which are side by side with their axes in parallel relation-

ship within said casing, the adjacent ends of said chambers being in communication to allow flow of fluid therebetween, one of said chambers containing a piston and the other of said chambers containing a pump including a drive shaft and a plurality of longitudinally disposed propeller pump units of the end discharge type, each propeller pump unit comprising a propeller blade unit rigidly secured to said drive shaft and adjacent guide vanes which are secured to said chamber, extending radially inwardly thereof, thus combining to form a multiple pump comprising alternately disposed propeller blade units and guide vanes so as to force the fluid in a direction parallel to the axis of said drive shaft, a shoulder formed on the wall of said pump chamber for seating the lowermost pump unit, said pump chamber having a threaded portion adjacent the uppermost pump unit, a follow-up nut unit in threaded relation therewith for clamping the respective pump units together thereby making the pump units readily detachable and variable in number so as to vary the capacity of the pump without affecting the casing structure, inlet ports contained within said follow-up nut unit, and an electric motor for driving said pump.

EDWIN E. ARNOLD.