(19) Europäisches Patentamt
European Patent Office
Office européen des brevets

(11) **EP 2 782 088 A1**

(12) **EUROPEAN PATENT APPLICATION**
published in accordance with Art. 153(4) EPC

(43) Date of publication:
24.09.2014 Bulletin 2014/39

(21) Application number: **12849199.0**

(22) Date of filing: **01.11.2012**

(51) Int Cl.:
G09F 3/02 *(2006.01)* ***A61G 12/00*** *(2006.01)*
G09F 3/16 *(2006.01)*

(86) International application number:
PCT/JP2012/007007

(87) International publication number:
WO 2013/073123 (23.05.2013 Gazette 2013/21)

(84) Designated Contracting States:
AL AT BE BG CH CY CZ DE DK EE ES FI FR GB GR HR HU IE IS IT LI LT LU LV MC MK MT NL NO PL PT RO RS SE SI SK SM TR

(30) Priority: **18.11.2011 JP 2011253009**

(71) Applicant: **Sato Holdings Kabushiki Kaisha**
Tokyo 153-0064 (JP)

(72) Inventors:
- **KONUMA, Hiroyuki**
  Meguro-ku, Tokyo 153-0064 (JP)
- **KOBAYASHI, Kazuyuki**
  Meguro-ku, Tokyo 153-0064 (JP)

(74) Representative: **Grünecker, Kinkeldey,**
Stockmair & Schwanhäusser
Leopoldstrasse 4
80802 München (DE)

(54) SERIES OF WRISTBANDS, AND WRISTBAND

(57) Provided is a continuous body of wristbands and a wristband integrally used for mother and child, and capable of preventing unintentional separation of a child wristband from a mother wristband when a wristband 4 is separated or when the mother wristband and the child wristband are attached to mother. The present invention focuses attention on increasing a separation resistance between a mother wristband 7 and a child wristband 8. A band base 2 includes: a band support 3; and the wristband 4 provided within an area inside the band support 3 with an outer borderline 6 disposed between the wristband and the band support, and the wristband 4 includes a mother wristband 7 and a child wristband 8 integrally formed side by side with an inner borderline 9 disposed therebetween, and is configured such that a separation resistance along the inner borderline 9 is greater than a separation resistance along the outer borderline 6.

Fig.2

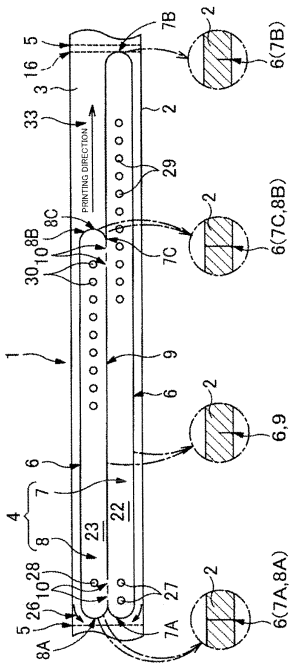

EP 2 782 088 A1

Description

Technical Field

[0001] The present invention relates to a continuous body of wristbands and a wristband, and in particular to a continuous body of wristbands and a wristband for identifying a patient in a medical field and the like by attaching the wristband by wrapping the wristband around a patient's wrist or ankle.

Background Art

[0002] Conventionally, a wristband, especially that for medical-use, on which name, birth date, sex, and other necessary information (identification information) of a hospitalized patient are handwritten or printed is wrapped around the patient's wrist or ankle (portion to be wrapped) so as to allow identification of the hospitalized patient, and thus enables verification of the hospitalized patient in examination or treatment.

[0003] However, conventionally, wristbands for a mother and an infant or child used in the field of obstetrics and gynecology or emergency first aid for accidents are often separately prepared and attached. Specifically, a wristband for mother is issued and attached to an expectant mother upon admission of the mother into a hospital, and a wristband for child is issued and attached to a baby upon delivery of the baby. Such a configuration of the wristbands or an issuing process of the wristbands involves a problem that mother-infant relation may be misidentified, possibly resulting in mix-ups of babies.

[0004] It should be noted that, as described in PTL 1, there is contrived a mother-infant-in-one wristband in which a mother wristband and a child wristband are integrally formed and together applied to a mother, and then upon delivery of a baby, the child wristband is separated from the mother wristband to be attached to the baby. However, as a separation resistance for separating a wristband from a band main body along a cutting line such as perforation or the like is even, there are such problems that a child wristband is separated from a mother wristband when separating a mother-infant-in-one wristband, and that a child wristband is unintentionally separated from a mother-infant-in-one wristband attached to a mother, and possibly lost.

Citation List

Patent Literature

[0005] PTL 1: Japanese Unexamined Patent Application Publication No. 2003-157010

Summary of Invention

Technical Problem

[0006] The present invention has been made in view of the above problems, and an object of the present invention is to provide a continuous body of wristbands and a wristband that may be integrally used for mother and child.

[0007] Another object of the present invention is to provide a continuous body of wristbands and a wristband eliminating any problem that may occur when the wristband is separated or when a child wristband is separated from a mother wristband.

[0008] Yet another object of the present invention is to provide a continuous body of wristbands and a wristband capable of preventing unintentional separation of a child wristband when the wristband is separated or when a mother wristband and the child wristband are attached to a mother.

Solution to Problems

[0009] Specifically, the present invention focuses attention on increasing a separation resistance between a mother wristband and a child wristband. A first aspect of the invention provides a continuous body of wristbands in a belt-like state allowing identification information to be shown on a belt-like band base, and having a plurality of wristbands wrappable around a portion to be wrapped such as a wrist or an ankle in series, wherein the band base material comprises: band supports; and the wristbands each provided within an area inside each of the band supports with an outer borderline disposed between the each wristband and the each band support, and the wristband includes a mother wristband and a child wristband integrally formed side by side with an inner borderline disposed therebetween, and is configured such that a separation resistance along the inner borderline is greater than a separation resistance along the outer borderline.

[0010] A second aspect of the invention provides a wristband comprsing a band base material, allowing identification information to be shown on a front surface of the band base, and wrappable around a portion to be wrapped such as a wrist or an ankle, wherein the band base material comprises: a band support; and the wristband provided within an area inside the band support with an outer borderline disposed between the wristband and the band support, and the wristband includes a mother wristband and a child wristband integrally formed side by side with an inner borderline disposed therebetween, and is configured such that a separation resistance along the inner borderline is greater than a separation resistance along the outer borderline.

[0011] The outer borderline and the inner borderline may include cutting lines each formed as a half-cut by cutting substantially half in a through-thickness direction

of the band base.

[0012] The inner borderline may be provided with a fragile partially-connecting section.

[0013] The band supports may be connected with each other with a separable connecting line disposed therebetween.

[0014] The continuous body of wristbands may be loadable on a printer to allow printing on a front surface of the band base, and ends of the outer borderline on an upstream side in a printing direction may be each formed as a full-cut by cutting through the through-thickness direction of the band base.

[0015] Both ends of the wristband may be configured as arc edges, and one of the arc edges of the wristband on an upstream side in a separation direction from the band support may be formed as a full-cut by cutting through the through-thickness direction of the band base.

[0016] The mother wristband may be made larger, and the child wristband may be made smaller.

[0017] An end of the child wristband on a downstream side in the separation direction from the band support may be formed as a full-cut by cutting through the through-thickness direction of the band base.

[0018] The mother wristband and the child wristband respectively may include the arc edges as separation ends made in a semicircular shape, the arc edges for starting separation respectively of the mother wristband and the child wristband may be positioned side by side to each other, and the arc edges for starting separation and the arc edge for ending separation of the child wristband may be each formed as a full-cut by cutting through the through-thickness direction of the band base.

[0019] The mother wristband and the child wristband may each include a print area on which a bar code relating to the identification information is allowed to be printed across the inner borderline.

[0020] The mother wristband and the child wristband may be decorated in an identical design.

Advantageous Effects of Invention

[0021] According to a continuous body of wristbands and a wristband of the present invention, each wristband including the mother wristband and the child wristband integrally formed side by side with the inner borderline disposed therebetween is provided within the area inside each band support with the outer borderline disposed between the wristband and the band support. The wristband is configured such that the separation resistance along the inner borderline is greater than the separation resistance along the outer borderline. Thus, it is possible to prevent the child wristband from being unintentionally separated when the wristband is separated from the band support, prevent the child wristband from being unintentionally separated from the wristband attached to mother, ensure identification of mother and child by the wristband, assure management information relating to patients, and prevent accidents such as mix-ups of babies from occurring.

[0022] In particular, according to the continuous body of wristbands of the first aspect of the invention, as the plurality of wristbands are provided in a belt-like state, the continuous body of wristbands may be loaded on a printer of any type, identification information relating to mother and child may be printed and shown as needed, and a wristband (a mother wristband and a child wristband) may be separated from a single band base and attached to mother in use.

[0023] In particular, according to the wristband of the second aspect of the invention, upon separation of the wristband from the band support, the wristband may be integrally separated without unintentionally separating the child wristband from the mother wristband. In addition, when the mother wristband is attached to mother integrally with the child wristband, it is possible to prevent the child wristband from being unintentionally separated from the mother wristband.

Brief Description of Drawings

[0024]

Fig. 1 is a perspective view of a continuous body of wristbands 1 rolled in a rolled state according to a first embodiment of the present invention.

Fig. 2 is a plan view of the continuous body of wristbands 1 flattened in a belt-like state.

Fig. 3 is a schematic side view of a thermal-transfer printer 11.

Fig. 4 is a plan view of a band base 2 in a state in which a bar code 24 and identification information 25 that is required are printed and shown visibly on a mother wristband 7 and a child wristband 8.

Fig. 5 is illustration of an operation of wrapping a wristband 4 of the continuous body of wristbands 1 around mother and child, in which Fig. 5(1) is a plan view of the wristband 4 separated from a band support 3, Fig. 5(2) is a perspective view of the wristband 4 wrapped around a mother' s wrist W1, and Fig. 5(3) is a perspective view of the mother wristband 7 of the wristband 4 wrapped around the mother's wrist W1, and the child wristband 8 of the wristband 4 wrapped around a child's wrist W2.

Fig. 6 is a plan view of a continuous body of wristbands 40 according to a second embodiment of the present invention.

Fig. 7 is a plan view of the band base 2 in a state in which the bar code 24 and the identification information 25 that is required are printed and shown visibly on a mother wristband 42, a first child wristband 43, and a second child wristband 44.

Description of Embodiments

[0025] According to the present invention, a resistance for separating a child wristband from a mother wristband

is greater than a resistance for separating a wristband as a whole including the mother wristband and the child wristband from a band support. Thus, it is possible to achieve a continuous body of wristbands and a wristband capable of facilitating separation of a mother-infant-in-one wristband, preventing the child wristband from being unintentionally separated from the mother wristband when the mother wristband and the child wristband are separated together from the band support or attached to a mother, and correctly securing a function of identifying mother and child so as to prevent accidents such as mix-ups of babies from occurring.

Examples

[0026] Hereinafter, a continuous body of wristbands 1 and a wristband 4 according to a first embodiment of the present invention will be described with reference to Fig. 1 to Fig. 5. Fig. 1 is a perspective view of the continuous body of wristbands 1 rolled in a rolled state, and Fig. 2 is a plan view of the continuous body of wristbands 1 flattened in a belt-like state. The continuous body of wristbands 1 is able to show identification information on a surface of a belt-like band base 2, and provided with a plurality of wristbands in series each of which may be wrapped around a portion to be wrapped such as a wrist or an ankle.

[0027] The band base 2 includes a plurality of the band supports 3 and a plurality of the wristbands 4 provided respectively within the band supports 3. Materials of the band base 2 themselves are optionally selected from those suitable respectively for a back surface that is brought into contact with a human body and a front surface for showing the identification information. A material that is soft and highly breathable is desirable for the back surface, and a material that is printable is desirable for the front surface, and it is possible to employ a configuration in which required base materials are stacked depending on their respective functions.

[0028] Each of the band support 3 contains a single leaf of the wristbands 4, and an area to be discarded without being used (a frame, so to speak) after the wristband 4 is removed from the band base 2. The band supports 3 are connected with each other by a separable connecting line 5 such as perforation provided therebetween.

[0029] The wristband 4 is provided within an area inside the band support 3 with an outer borderline 6 therebetween, and includes a mother wristband 7 and a child wristband 8 integrally formed side by side with an inner borderline 9 therebetween. The outer borderline 6 constitutes an outer edge or an outline of the wristband 4 and contains the mother wristband 7 and the child wristband 8 therein. Along the outer borderline 6, the wristband 4 is integrally separated from the band support 3. The inner borderline 9 is linearly positioned along a border portion where the mother wristband 7 and the child wristband 8 are adjacent to each other. Along the inner borderline 9, the mother wristband 7 and the child wristband 8 are separated.

[0030] The mother wristband 7 is larger than the child wristband 8, and the child wristband 8 is smaller than the mother wristband 7. Specifically, the mother wristband 7 is longer and wider than the child wristband 8, so that the mother wristband 7 and the child wristband 8 respectively accommodate sizes of the wrists or ankles (portion to be wrapped) of mother and child.

[0031] As illustrated by a partially enlarged section shown in Fig. 2, the outer borderline 6 and the inner borderline 9 include cutting lines that are formed as half-cuts by cutting substantially half from the back surface of the band base 2 in a through-thickness direction of the band base 2 to allow separation of the wristband 4 from the band support 3 as well as separation of the mother wristband 7 from the child wristband 8 of the wristband 4. However, near each end of the child wristband 8 along the inner borderline 9, there are provided a required number of fragile partially-connecting sections 10 (two, in the example shown in the figure) having the same resistance as the perforation or the like of the connecting line 5, and this makes separation along the inner borderline 9 more difficult than separation along the outer borderline 6. In this manner, the separation resistance along the inner borderline 9 is made greater than the separation resistance along the outer borderline 6.

[0032] The continuous body of wristbands 1 may be loaded on a printer of any type and allows printing on the front surface of the band base 2 (the wristband 4). Fig. 3 is a schematic side view of a thermal-transfer printer 11 as one example of the above printer, and the thermal-transfer printer 11 includes a feeder 12 for the continuous body of wristbands 1, a position detecting unit 13, and a printing unit 14.

[0033] The feeder 12 is able to hold the continuous body of wristbands 1 in a rolled state, and feed the continuous body of wristbands 1 flattened in a belt-like state toward the position detecting unit 13 and the printing unit 14.

[0034] The position detecting unit 13 includes a position detecting sensor 15 of any type. The position detecting unit 13 detects a position detection mark 16 provided on a back surface of the band support 3 of the continuous body of wristbands 1, and detects a relative position of the continuous body of wristbands 1 (the wristband 4) with respect to the printing unit 14. Here, the position detection mark 16 is desirably provided for an area other than a back surface of the wristband 4 so that any ink may not be attached to skins of mother and child. Further, in place of the position detection mark 16, a position-detection through hole (not depicted) may be provided at any portion of the band support 3, or at a different portion of lines of attachment holes 27 and 28 and adjustment holes 29 and 30 that will be later described (Fig. 2) in the wristband 4, to be used for the detection of the relative position.

[0035] The printing unit 14 includes a thermal head 17,

a platen roller 18, and a feed shaft 20 and a winding shaft 21 for a thermal transfer ink ribbon 19. The printing unit 14 transfers the continuous body of wristbands 1 as the platen roller 18 is driven to rotate, and prints identification information relating to mother and child using the thermal head 17.

[0036] Using the thermal-transfer printer 11 thus configured, upon admission of an expectant mother into a hospital, required identification information are printed as pieces of variable information respectively on a mother print area 22 of the mother wristband 7 and a child print area 23 of the child wristband 8. However, the bar code 24 relating to the identification information may be printed across the inner borderline 9 over the mother print area 22 and the child print area 23. With this, it is possible to reliably print and show the same identification information for mother and child at one time, and to manage mother and child by a common code even after the child wristband 8 is separated from the mother wristband 7. Fig. 4 is a plan view of the band base 2 in a state in which the bar code 24 and the identification information 25 that is required are printed and shown visibly on the mother wristband 7 and the child wristband 8.

[0037] Referring back to Fig. 2, as described previously, the wristband 4 is configured separable from the band support 3 along the outer borderline 6 having the half-cut, and the wristband 8 is configured separable from the mother wristband 7 along the inner borderline 9 similarly having a half-cut. More specifically, while linear sections of the outer borderline 6 and the inner borderline 9 along the length of the wristband 4 are provided as half-cuts, both ends of the wristband 4 as separation ends are configured semicircular arc edges, one of the arc edges of the wristband 4 on an upstream side from the band support 3 in a separation direction is formed as a full-cut by cutting through the through-thickness direction of the band base 2. Specifically, as illustrated by the partially enlarged section shown in Fig. 2, the mother wristband 7 and the child wristband 8 include arc edges (separation-starting arc edges 7A and 8A and separation-ending arc edges 7B and 8B) as the separation ends configured in a semicircular shape, the separation-starting arc edges 7A and 8A of the mother wristband 7 and the child wristband 8 are positioned side by side to each other, and the separation-starting arc edges 7A and 8A and the separation-ending arc edge 8B of the child wristband 8 are provided as full-cuts by cutting through the through-thickness direction of the band base 2.

[0038] In other words, the ends of the outer borderline 6 on an upstream side in a printing direction (transfer direction) of the wristband 4 (the separation-starting arc edges 7A and 8A) are provided as the full-cuts by cutting through the through-thickness direction of the band base 2, and therefore these arc edges (the separation-starting arc edges 7A and 8A) may not turn outward when the continuous body of wristbands 1 is loaded on the thermal-transfer printer 11 and printed while transfer, and may be used when stating separation of the wristband 4 from the band support 3. Here, an arrow for separation 26, and an instruction such as "separate from this side" (not depicted) if necessary, may be previously printed and shown at the separation-starting arc edges 7A and 8A. However, the separation-ending arc edge 7B of the mother wristband 7 is formed as a half-cut, as being positioned on a maximum downstream side in the printing direction (transfer direction), and thus it is possible to prevent the wristband from turning outward when the continuous body of wristbands 1 is loaded on the thermal-transfer printer 11 and printed while transfer. Further, even if the separation-ending arc edge 8B of the child wristband 8 is a full-cut, as the separation-ending arc edge 8B is positioned more upstream side than the separation-ending arc edge 7B of the mother wristband 7 in the printing direction (transfer direction), it is less probable that the separation-ending arc edge 8B turns upward on the thermal-transfer printer 11,and the separation-ending arc edge 8B may not pose any problem in the separating operation when the child wristband 8 is separated together with the mother wristband 7 from the band support 3. Here, it is also possible to provide a configuration such that turning outward during printing while transfer with in the thermal-transfer printer 11 is reliably prevented by making a tip end arc portion 8C of the separation-ending arc edge 8B of the child wristband 8 a half-cut, and that it is possible to ensure the separating operation when separating the wristband 4 from the band support 3 by making an arc portion from the tip end arc portion 8C to the inner borderline 9 and an arc-portion-facing linear portion 7C of the outer borderline 6 of the mother wristband 7 facing the arc portion full-cuts even along the outer borderline 6.

[0039] It should be noted that the attachment holes 27 and 28 of an optional number and the adjustment holes 29 and 30 of an optional number are provided on both end sides of the mother print area 22 of the mother wristband 7 and the child print area 23 of the child wristband 8, and the mother wristband 7 and the child wristband 8 may be clipped to form a ring by a mother attachment clip 31 and a child attachment clip 32 (Fig. 5(3)), respectively.

[0040] Further, a printing direction arrow 33 indicating the printing direction (transfer direction) by the thermal-transfer printer 11 is previously printed in a blank space of the band support 3.

[0041] Moreover, by decorating the mother wristband 7 and the child wristband 8 optionally in the same design (not depicted), their totality may be visually confirmed more reliably. However, by employing the same design while selecting a pink background for the mother wristband 7 and a background of a different color such as yellow for the child wristband 8, it is possible to make the mother wristband 7 and the child wristband 8 identifiable while the design still provides a sense of unity.

[0042] An operation of wrapping the wristband 4 of the continuous body of wristbands 1 thus configured around mother and child will be described with reference to Fig.

5. Fig. 5 is illustration of the operation of wrapping the wristband 4 of the continuous body of wristbands 1 around mother and child, in which Fig. 5(1) is a plan view of the wristband 4 separated from the band support 3, Fig. 5(2) is a perspective view of the wristband 4 wrapped around the mother's wrist W1, and Fig. 5(3) is a perspective view of the mother wristband 7 of the wristband 4 wrapped around the mother's wrist W1, and the child wristband 8 of the wristband 4 wrapped around the child's wrist W2.

[0043] As illustrated in Fig. 4, a piece having the band support 3 and the wristband 4 is obtained by printing the bar code 24, the identification information 25, and the like in the mother print area 22 and the child print area 23 of the wristband 4 using the thermal-transfer printer 11 shown in Fig. 3, and then by separating along the connecting line 5 such as perforation. At this time of printing, as the separation-ending arc edge 7B of the wristband 4 on the upstream side in the printing direction (transfer direction) is a half-cut, and the separation-starting arc edge 7A and the separation-starting arc edge 8A on the downstream side in the printing direction is a full-cut, the wristband 4 may not be separated from the band support 3 during printing. Here, while the separation-ending arc edge 8B of the child wristband 8 is a full-cut, it does not give a large influence as a proportion of this portion is small.

[0044] As illustrated in Fig. 5(1), the wristband 4 as a whole (the mother wristband 7 and the child wristband 8) is separated from the band support 3. At this time of separation, as the separation-starting arc edge 7A of the mother wristband 7 and the separation-starting arc edge 8A of the child wristband 8 are full-cuts, it is possible to easily complete the separation by start separating from this portion. It should be noted that as the separation-ending arc edge 8B of the child wristband 8 is a full-cut, it is possible to reliably separate the separation-ending arc edge 8B from the band support 3 even though the arc portion of the separation-ending arc edge 8B is against the separation direction of the wristband 4 from the band support 3.

[0045] Next, as illustrated in Fig. 5(2), the wristband 4, in a state in which the mother wristband 7 and the child wristband 8 are connected in one piece, is wrapped around the mother's wrist W1 and fixed by an attachment clip 31 at the attachment hole 27 and the adjustment hole 29 of the mother wristband 7 fitting together.

[0046] As illustrated in Fig. 5(3), when a baby is born, a portion of the child wristband 8 is separated from the mother wristband 7 of the wristband 4 around the mother's wrist W1 in such a manner that the half-cuts and the fragile partially-connecting sections 10 are torn along the inner borderline 9, and then the child wristband 8 is wrapped around the baby's wrist W2 and fixed by the attachment clip 32 at the attachment hole 28 and adjustment hole 30 of the child wristband 8 fitting together.

[0047] In this manner, it is possible to easily complete printing to the wristband 4, separation of the wristband 4 from the band support 3, and wrapping around the mother's wrist W1 without any problem. Further, as the inner borderline 9 and the outer borderline 6 have two different degrees of separation resistance due to the fragile partially-connecting sections 10 provided along the inner borderline 9, it is possible to prevent possible occurrence of separation of the child wristband 8 from the mother wristband 7 even when the wristband is worn around the mother's wrist W1, and to facilitate the operation of separating the child wristband 8 from the mother wristband 7 and wrapping the child wristband 8 around the baby.

[0048] It should be noted that the configuration according to the present invention in which the separation resistance along the inner borderline 9 is greater than the separation resistance along the outer borderline 6 may be achieved by providing two different degrees of separation resistance, or three different degrees of separation resistance as need, by optionally combining the full-cuts, the half-cuts, and the fragile partially-connecting sections 10 described above. For example, it is possible to employ a combination in which the outer borderline 6 is constituted by the full-cuts and the half-cuts and the inner borderline 9 is constituted by the half-cuts and the fragile partially-connecting sections 10 as in the case of the continuous body of wristbands 1 and the wristband 4 according to the first embodiment described above, or in which the outer borderline 6 is constituted by the half-cuts and the inner borderline 9 is constituted by the half-cuts and the fragile partially-connecting sections 10. Alternatively, it is possible to employ a configuration in which both the outer borderline 6 and the inner borderline 9 are constituted by the half-cuts, but the depth of the half-cuts maybe configured such that the half-cuts along the outer borderline 6 are deeper, and the half-cuts along the inner borderline 9 are shallower. It should be appreciated that the fragile partially-connecting sections 10 may also be provided along the inner borderline 9 in this case.

[0049] Further, according to the present invention, the band support 3 may be provided with more than one piece of the child wristbands 8 in addition to the single mother wristband 7. With this, it is possible to accommodate a case in which there are two or more babies are delivered. In addition, when the child wristbands 8 are attached to both a wrist and an ankle of a baby, even if one of the child wristbands 8 is removed from the wrist or the ankle of the baby, it is possible to identify the baby by the remaining one of the child wristbands 8.

[0050] Specifically, Fig. 6 is a plan view of a continuous body of wristbands 40 according to a second embodiment of the present invention, and the continuous body of wristbands 40 includes the band base 2 each having the band support 3 and a wristband 41.

[0051] The wristband 41 integrally includes a mother wristband 42, and a pair having a first child wristband 43 and a second child wristband 44. The wristband 41 is separated from the band support 3 along an outer borderline 45, and the first child wristband 43 and the second child wristband 44 are separated from the mother wrist-

band 42 respectively along a first inner borderline 46 and a second inner borderline 47.

[0052] Specifically, linear sections of the outer borderline 45, the first inner borderline 46, and the second inner borderline 47 are provided as half-cuts. Further, an separation-starting arc edge 42A of the mother wristband 42 on the upstream side in the printing direction (transfer direction), and the separation-starting arc edge 43A of the first child wristband 43 and the separation-starting arc edge 44A of the second child wristband 44 on the upstream side in the printing direction (transfer direction) are provided as full-cuts. In addition, an separation-ending arc edge 42B of the mother wristband 42 on the downstream side in the printing direction (transfer direction), and an separation-ending arc edge 43B of the first child wristband 43 and an separation-ending arc edge 44B of the second child wristband 44 on the downstream in the printing direction (transfer direction) are provided as half-cuts.

[0053] However, prevention of the wristband from turning outward when printing while transfer in the thermal-transfer printer 11 is ensured by providing a tip end arc portion 42C of the separation-ending arc edge 42B of the mother wristband 42, a tip end arc portion 43C of the separation-ending arc edge 43B of the first child wristband 43, and a tip end arc portion 44C of the separation-ending arc edge 44B of the second child wristband 44 as half-cuts. Further, by providing arc portions from the tip end arc portions 42C, 43C, and 44C to the first inner borderline 46 and the second inner borderline 47 as full-cuts even along the outer borderline 45, reliability in the operation of separating the wristband 41 from the band support 3 is ensured. Moreover, by providing an arc-portion-facing linear portion 42D of the mother wristband 42 along the outer borderline 45 that faces the separation-starting arc edge 43A of the first child wristband 43 on the upstream side in the printing direction (transfer direction) as full-cuts even along the outer borderline 45, reliability in the operation of separating the wristband 41 from band support 3 is ensured.

[0054] The mother wristband 42 includes a mother print area 48, the first child wristband 43 includes a first child print area 49, and the second child wristband 44 includes a second child print area 50. The width of the child print areas 49 and 50 of the first child wristband 43 and the second child wristband 44 is secured by causing slight curvature in the middle of the second inner borderline 47.

[0055] Here, providing an optional number of the fragile partially-connecting sections 10 for both ends of the first inner borderline 46 and the second inner borderline 47 makes a separation resistance between the mother wristband 42, and the first child wristband 43 and the second child wristband 44 be greater than the separation resistance when the wristband 41 as a whole is separated from the band support 3.

[0056] Fig. 7 is a plan view of the band base 2 in a state in which the bar code 24 and the identification information 25 that is required are printed and shown visibly on the mother wristband 42, the first child wristband 43, and the second child wristband 44. The bar code 24 and the identification information may also be printed as variable information by loading the continuous body of wristbands on the thermal-transfer printer 11 (Fig. 3).

[0057] Similarly to the existing continuous body of wristbands 1 (Fig. 1) and the existing wristband 4 (Fig. 2) of the first embodiment, according to the continuous body of wristbands 40 and the wristband 41 thus configured, it is possible to print the required identification information 25 on the mother wristband 42, the first child wristband 43, and the second child wristband 44 that are necessary for identification of mother and baby or babies, in particular in the case in which twins are delivered or in which the wristbands are wrapped around both wrist and ankle of a baby.

[0058] Further, in separation of the wristband 41 from the band support 3 in a single piece of the band base 2 separated by the connecting line 5, starting separation from the full-cut separation-starting arc edge 42A of the mother wristband 42 allows the mother wristband 42, the first child wristband 43, and the second child wristband 44 to be separated integrally along the half-cut outer borderline 45 easily and reliably as the wristband 41. The wristband 41 is wrapped around the mother's wrist W1 in the same manner as the wristband 4 (Fig. 2). As the first inner borderline 46 and the second inner borderline 47 that are half-cut are provided with the fragile partially-connecting sections 10, it is possible to prevent an possible occurrence of unintentional separation of the first child wristband 43 and the second child wristband 44 from the mother wristband 42. After the delivery, the first child wristband 43 and the second child wristband 44 are separated from the mother wristband 42 to be wrapped around a wrist and an ankle of the baby.

Reference Signs List

[0059]

1: Continuous body of wristbands (First Embodiment, Fig. 1)
2: Band Base
3: Band Support
4: Wristband (First Embodiment, Fig. 2)
5: Connecting Line such as Perforation
6: Outer Borderline
7: Mother Wristband
7A: Separation-Starting Arc Edge of Mother Wristband 7 (Arc Edge)
7B: Separation-Ending Arc Edge of Mother Wristband 7 (Arc Edge)
7C: Arc-Portion-Facing Linear Portion of Outer Borderline 6 of Mother Wristband 7
8: Child Wristband
8A: Separation-Starting Arc Edge of Child Wristband 8 (Arc Edge)

8B: Separation-Ending Arc Edge of Child Wristband 8 (Arc Edge)
8C: Tip End Arc Portion of Separation-Ending Arc Edge 8B of Child Wristband 8
9: Inner Borderline
10: Fragile Partially-Connecting Section
11: Thermal-Transfer Printer (Fig. 3)
12: Feeder of Continuous body of wristbands 1
13: Position Detecting Unit
14: Printing Unit
15: Position Detecting Sensor
16: Position Detection Mark
17: Thermal Head
18: Platen Roller
19: Thermal Transfer Ink Ribbon
20: Feed Shaft
21: Winding Shaft
22: Mother Print Area (Print Area)
23: Child Print Area (Print Area)
24: Bar Code
25: Identification Information
26: Arrow for Separation
27: Attachment Hole
28: Attachment Hole
29: Adjustment Hole
30: Adjustment Hole
31: Mother Attachment Clip
32: Child Attachment Clip
33: Printing Direction Arrow
40: Continuous body of wristbands (Second Embodiment, Fig. 6)
41: Wristband (Second Embodiment, Fig. 6)
42: Mother Wristband
42A: Separation-Starting Arc Edge of Mother Wristband 42 (Arc Edge)
42B: Separation-Ending Arc Edge of Mother Wristband 42 (Arc Edge)
42C: Tip End Arc Portion of Separation-Ending Arc Edge 42B of Mother Wristband 42
42D: Arc-Portion-Facing Linear Portion of Outer Borderline 45 of Mother Wristband 42
43: First Child Wristband
43A: Separation-Starting Arc Edge of First Child Wristband 43 (Arc Edge)
43B: Separation-Ending Arc Edge of First Child Wristband 43 (Arc Edge)
43C: Tip End Arc Portion of Separation-Ending Arc Edge 43B of First Child Wristband 43
44: Second Child Wristband
44A: Separation-Starting Arc Edge of Second Child Wristband 44 (Arc Edge)
44B: Separation-Ending Arc Edge of Second Child Wristband 44 (Arc Edge)
44C: Tip End Arc Portion of Separation-Ending Arc Edge 44B of Second Child Wristband 44
45: Outer Borderline
46: First Inner Borderline (Inner Borderline)
47: Second Inner Borderline (Inner Borderline)
48: Mother Print Area (Print Area)
49: First Child Print Area (Print Area)
50: Second Child Print Area (Print Area)
W1: Mother's Wrist (Portion to be Wrapped)
W2: Child's Wrist (Portion to be Wrapped)

Claims

1. A continuous body of wristbands in a belt-like state allowing identification information to be shown on a belt-like band base, and having a plurality of wristbands wrappable around a portion to be wrapped such as a wrist or an ankle in series, wherein
the band base material comprises:

band supports; and
the wristbands each provided within an area inside each of the band supports with an outer borderline disposed between the each wristband and the each band support, and

the wristband includes a mother wristband and a child wristband integrally formed side by side with an inner borderline disposed therebetween, and is configured such that a separation resistance along the inner borderline is greater than a separation resistance along the outer borderline.

2. The continuous body of wristbands according to claim 1, wherein
the outer borderline and the inner borderline include cutting lines each formed as a half-cut by cutting substantially half in a through-thickness direction of the band base.

3. The continuous body of wristbands according to claim 1 or 2, wherein
the inner borderline is provided with a fragile partially-connecting section.

4. The continuous body of wristbands according to one of claims 1 to 3, wherein
the band supports are connected with each other with a separable connecting line disposed therebetween.

5. The continuous body of wristbands according to one of claims 1 to 4, wherein
the continuous body of wristbands is loadable on a printer to allow printing on a front surface of the band base, and
ends of the outer borderline on an upstream side in a printing direction are each formed as a full-cut by cutting through the through-thickness direction of the band base.

6. The continuous body of wristbands according to one

of claims 1 to 5, wherein
both ends of the wristband are configured as arc edges, and one of the arc edges of the wristband on an upstream side in a separation direction from the band support is formed as a full-cut by cutting through the through-thickness direction of the band base.

7. The continuous body of wristbands according to one of claims 1 to 6, wherein
the mother wristband is made larger, and
the child wristband is made smaller.

8. The continuous body of wristbands according to claim 7, wherein
an end of the child wristband on a downstream side in the separation direction from the band support is formed as a full-cut by cutting through the through-thickness direction of the band base.

9. The continuous body of wristbands according to claim 7, wherein
the mother wristband and the child wristband respectively include the arc edges as separation ends made in a semicircular shape,
the arc edges for starting separation respectively of the mother wristband and the child wristband are positioned side by side to each other, and
the arc edges for starting separation and the arc edge for ending separation of the child wristband are each formed as a full-cut by cutting through the through-thickness direction of the band base.

10. The continuous body of wristbands according to one of claims 1 to 9, wherein
the mother wristband and the child wristband each include a print area on which a bar code relating to the identification information is allowed to be printed across the inner borderline.

11. The continuous body of wristbands according to one of claims 1 to 10, wherein
the mother wristband and the child wristband are decorated in an identical design.

12. A wristband comprising a band base material, allowing identification information to be shown on a front surface of the band base, and wrappable around a portion to be wrapped such as a wrist or an ankle, wherein
the band base material comprises:

a band support; and
the wristband provided within an area inside the band support with an outer borderline disposed between the wristband and the band support, and

the wristband includes a mother wristband and a child wristband integrally formed side by side with an inner borderline disposed therebetween, and is configured such that a separation resistance along the inner borderline is greater than a separation resistance along the outer borderline.

Fig.1

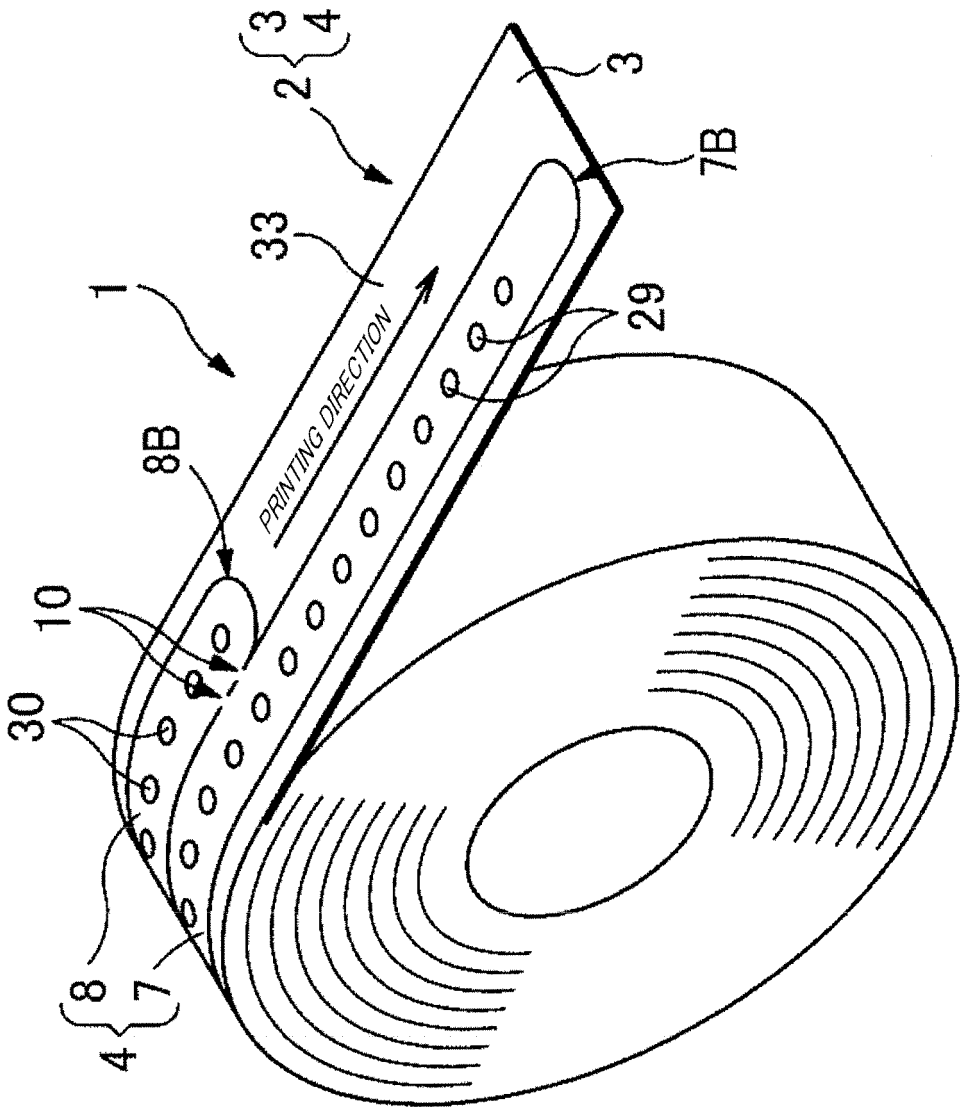

Fig.2

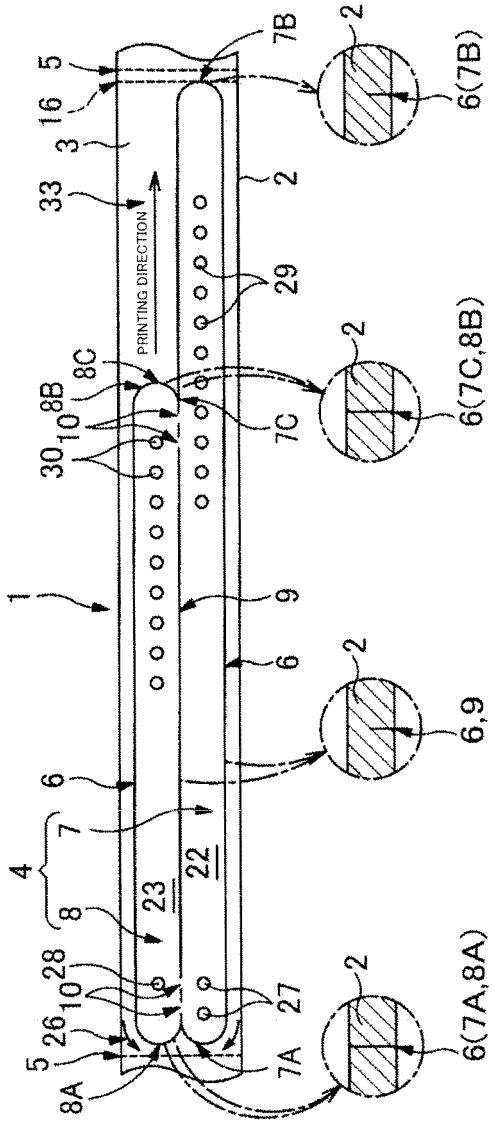
PRINTING DIRECTION
1
2
3
4
5
6
7
8
9
10
16
22
23
26
27
28
29
30
33
5
7A
7B
7C
8A
8B
8C
6(7B)
6(7C,8B)
6,9
6(7A,8A)

Fig.3

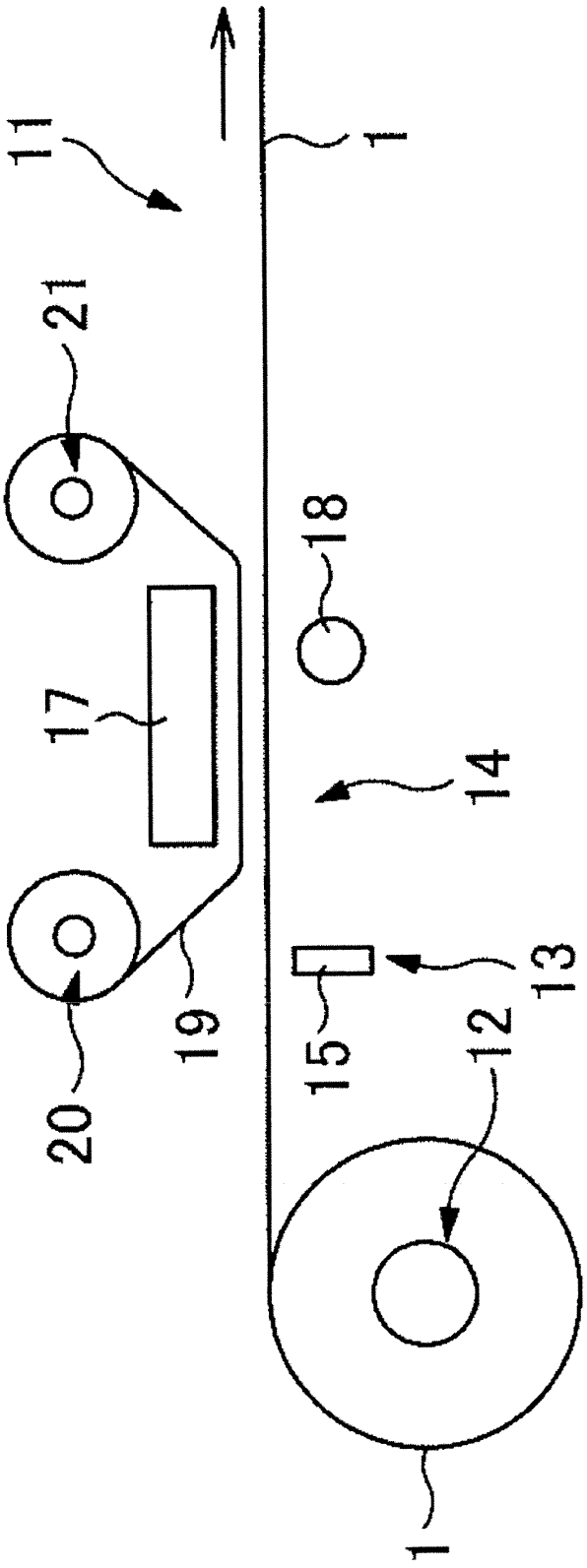

Fig.4

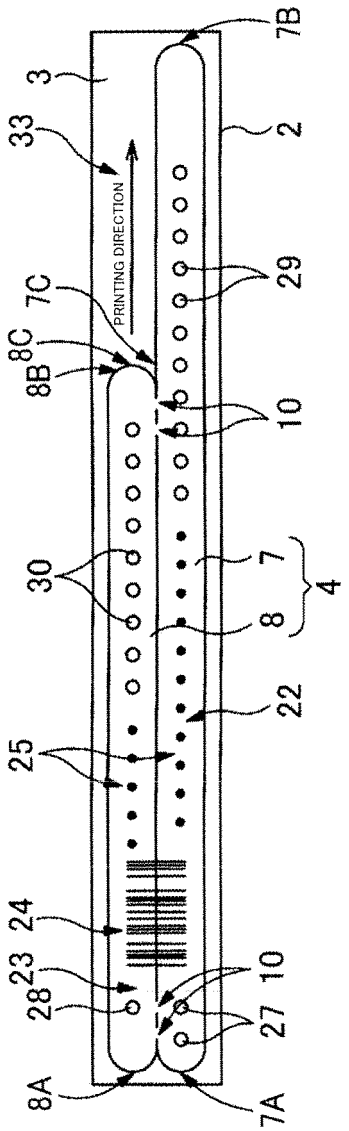
7B
3
33
2
PRINTING DIRECTION
29
7C
8C
8B
10
30
7
4
8
22
25
24
23
28
10
27
8A
7A

Fig.5

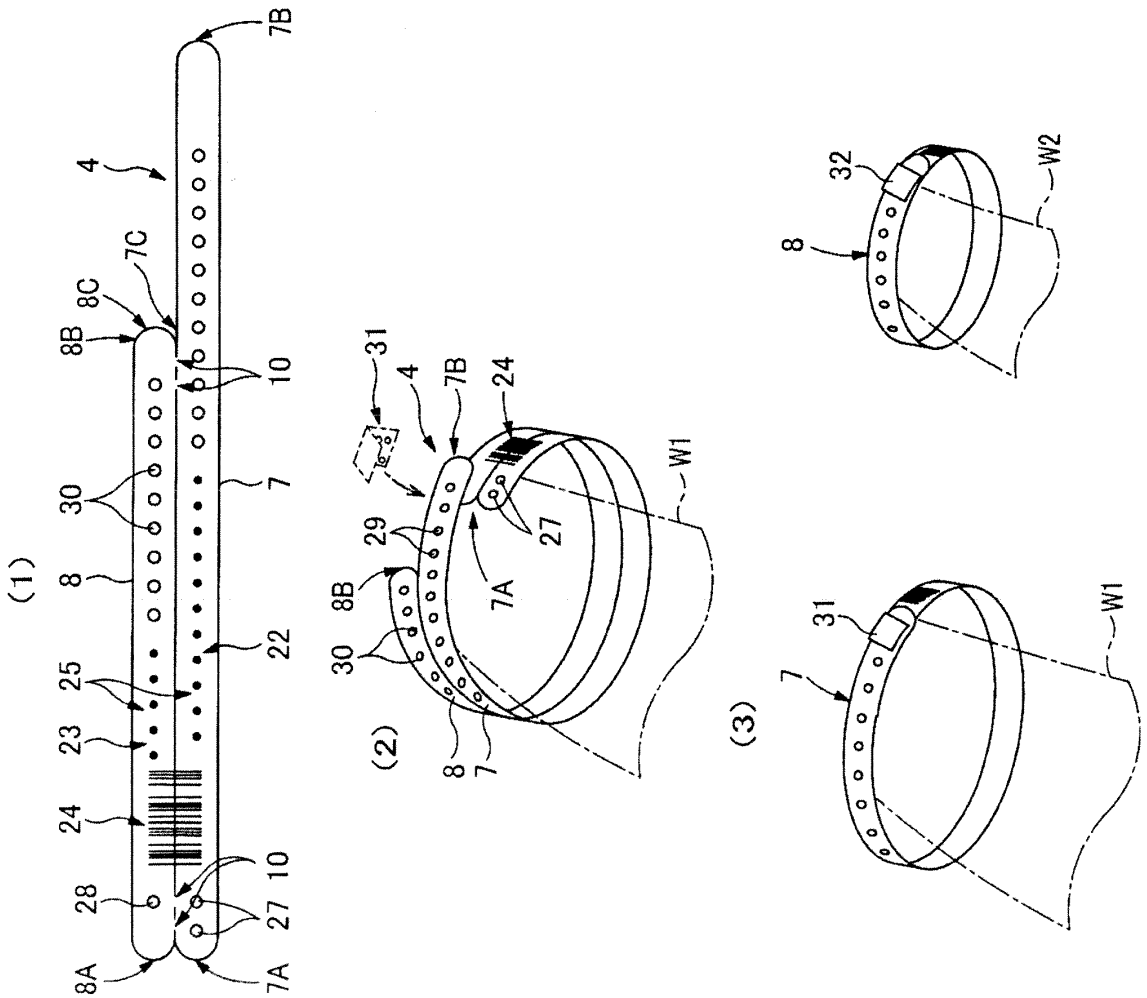
(1)
7B
4
7C
8C
8B
10
30
7
8
22
25
23
24
28
27
10
8A
7A
(2)
31
4
7B
24
W1
29
27
8B
30
7A
8
7
(3)
32
W2
8
31
W1
7

Fig.6

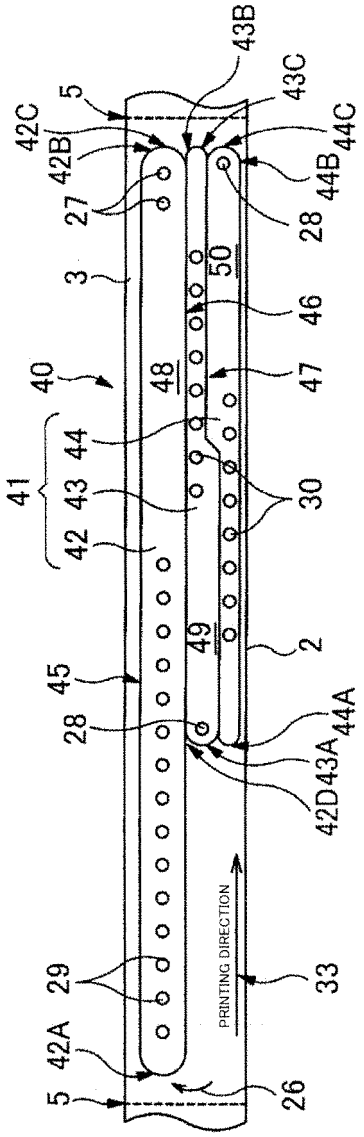
43B
43C
5
42C
42B
44C
44B
27
28
3
50
46
40
48
47
41
44
43
42
30
49
2
45
28
44A
43A
42D
PRINTING DIRECTION
29
33
42A
5
26

Fig.7

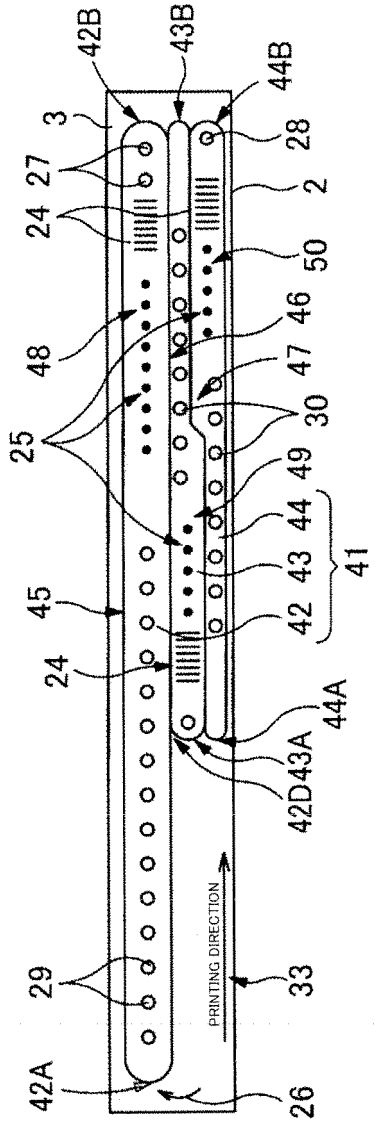
42B
43B
44B
3
28
27
2
24
50
46
48
47
30
25
49
44
43
41
42
45
24
44A
43A
42D
29
33
PRINTING DIRECTION
42A
26

INTERNATIONAL SEARCH REPORT

International application No.
PCT/JP2012/007007

A. CLASSIFICATION OF SUBJECT MATTER
G09F3/02(2006.01)i, *A61G12/00*(2006.01)i, *G09F3/16*(2006.01)i

According to International Patent Classification (IPC) or to both national classification and IPC

B. FIELDS SEARCHED

Minimum documentation searched (classification system followed by classification symbols)
G09F3/00-3/20, A61G12/00, A44C5/00

Documentation searched other than minimum documentation to the extent that such documents are included in the fields searched
Jitsuyo Shinan Koho 1922-1996 Jitsuyo Shinan Toroku Koho 1996-2013
Kokai Jitsuyo Shinan Koho 1971-2013 Toroku Jitsuyo Shinan Koho 1994-2013

Electronic data base consulted during the international search (name of data base and, where practicable, search terms used)

C. DOCUMENTS CONSIDERED TO BE RELEVANT

Category*	Citation of document, with indication, where appropriate, of the relevant passages	Relevant to claim No.
A	JP 2003-157010 A (Sato Corp.), 30 May 2003 (30.05.2003), entire text; all drawings (Family: none)	1-12
A	JP 2003-164499 A (Dainippon Printing Co., Ltd.), 10 June 2003 (10.06.2003), paragraphs [0012] to [0016]; fig. 1 to 4 (Family: none)	1-12
A	JP 11-219115 A (Konica Corp.), 10 August 1999 (10.08.1999), paragraphs [0023] to [0025]; fig. 1 (Family: none)	1-12

☒ Further documents are listed in the continuation of Box C. ☐ See patent family annex.

* Special categories of cited documents:
"A" document defining the general state of the art which is not considered to be of particular relevance
"E" earlier application or patent but published on or after the international filing date
"L" document which may throw doubts on priority claim(s) or which is cited to establish the publication date of another citation or other special reason (as specified)
"O" document referring to an oral disclosure, use, exhibition or other means
"P" document published prior to the international filing date but later than the priority date claimed
"T" later document published after the international filing date or priority date and not in conflict with the application but cited to understand the principle or theory underlying the invention
"X" document of particular relevance; the claimed invention cannot be considered novel or cannot be considered to involve an inventive step when the document is taken alone
"Y" document of particular relevance; the claimed invention cannot be considered to involve an inventive step when the document is combined with one or more other such documents, such combination being obvious to a person skilled in the art
"&" document member of the same patent family

Date of the actual completion of the international search	Date of mailing of the international search report
22 January, 2013 (22.01.13)	29 January, 2013 (29.01.13)
Name and mailing address of the ISA/ Japanese Patent Office Facsimile No.	Authorized officer Telephone No.

Form PCT/ISA/210 (second sheet) (July 2009)

INTERNATIONAL SEARCH REPORT

International application No.
PCT/JP2012/007007

C (Continuation). DOCUMENTS CONSIDERED TO BE RELEVANT

Category*	Citation of document, with indication, where appropriate, of the relevant passages	Relevant to claim No.
A	JP 2001-256313 A (Identification y Custodia Neonatal, SA), 21 September 2001 (21.09.2001), paragraph [0024]; fig. 4 & US 2001/0015553 A1 & EP 1111568 A1 & DE 69926516 D & NO 20006583 A & HU 4998 A2 & AU 7238900 A & BR 6533 A & PL 344729 A1 & CZ 20004824 A3 & IL 140411 D & CA 2329562 A1 & AT 301322 T & ES 2247773 T3 & KR 10-2001-0062585 A & CN 1306267 A & TR 200003841 A1 & ZA 200007521 A & CO 005300441 A1	1-12
A	GB 1227497 A (H.D.FITZPATRICK & Co.), 07 April 1971 (07.04.1971), entire text; all drawings (Family: none)	1-12
A	WO 2010/035353 A1 (Sato Corp.), 01 April 2010 (01.04.2010), paragraph [0024]; fig. 5 & JP 2010-85451 A & EP 2333752 A1	10

Form PCT/ISA/210 (continuation of second sheet) (July 2009)

REFERENCES CITED IN THE DESCRIPTION

This list of references cited by the applicant is for the reader's convenience only. It does not form part of the European patent document. Even though great care has been taken in compiling the references, errors or omissions cannot be excluded and the EPO disclaims all liability in this regard.

Patent documents cited in the description

- JP 2003157010 A **[0005]**