(12) INTERNATIONAL APPLICATION PUBLISHED UNDER THE PATENT COOPERATION TREATY (PCT)

(19) World Intellectual Property Organization
International Bureau

(43) International Publication Date
3 November 2005 (03.11.2005)

PCT

(10) International Publication Number
WO 2005/102131 A1

(51) International Patent Classification[7]: A47K 10/42

(21) International Application Number:
PCT/US2005/005118

(22) International Filing Date: 14 February 2005 (14.02.2005)

(25) Filing Language: English

(26) Publication Language: English

(30) Priority Data:
10/810,520 26 March 2004 (26.03.2004) US

(71) Applicant *(for all designated States except US)*: **KIMBERLY-CLARK WORLDWIDE, INC.** [US/US]; 401 N. Lake Street, Neenah, WI 54956 (US).

(72) Inventors; and

(75) Inventors/Applicants *(for US only)*: **DECKER, Christopher, Vincent** [US/US]; 525 West Brown Street, Apt. 3, Waupun, WI 53963 (US). **KEHN, Stephen, Robert** [US/US]; 321 W. Prospect Avenue, Appleton, WI 54911 (US). **MAHAFFEY, Cleary, E.** [US/US]; 2210 E. Elmview Drive, Appleton, WI 54915 (US). **VELAZQUEZ, Herb, Flores** [US/US]; 3142 Westfield Ridge, Neenah, WI 54956 (US). **WYDEVEN, John, Martin** [US/US]; 1732 Van Zeeland Court, Little Chute, WI 54140 (US).

(74) Agents: **CONNELLY, Thomas, J.** et al.; Kimberly-Clark Worldwide, INC., 401 N. Lake Street, Neenah, WI 54956 (US).

(81) Designated States *(unless otherwise indicated, for every kind of national protection available)*: AE, AG, AL, AM, AT, AU, AZ, BA, BB, BG, BR, BW, BY, BZ, CA, CH, CN, CO, CR, CU, CZ, DE, DK, DM, DZ, EC, EE, EG, ES, FI, GB, GD, GE, GH, GM, HR, HU, ID, IL, IN, IS, JP, KE, KG, KP, KR, KZ, LC, LK, LR, LS, LT, LU, LV, MA, MD, MG, MK, MN, MW, MX, MZ, NA, NI, NO, NZ, OM, PG, PH, PL, PT, RO, RU, SC, SD, SE, SG, SK, SL, SM, SY, TJ, TM, TN, TR, TT, TZ, UA, UG, US, UZ, VC, VN, YU, ZA, ZM, ZW.

(84) Designated States *(unless otherwise indicated, for every kind of regional protection available)*: ARIPO (BW, GH, GM, KE, LS, MW, MZ, NA, SD, SL, SZ, TZ, UG, ZM, ZW), Eurasian (AM, AZ, BY, KG, KZ, MD, RU, TJ, TM), European (AT, BE, BG, CH, CY, CZ, DE, DK, EE, ES, FI, FR, GB, GR, HU, IE, IS, IT, LT, LU, MC, NL, PL, PT, RO,

[Continued on next page]

(54) Title: A DISPENSER CAPABLE OF DISPENSING SHEET-LIKE ARTICLES

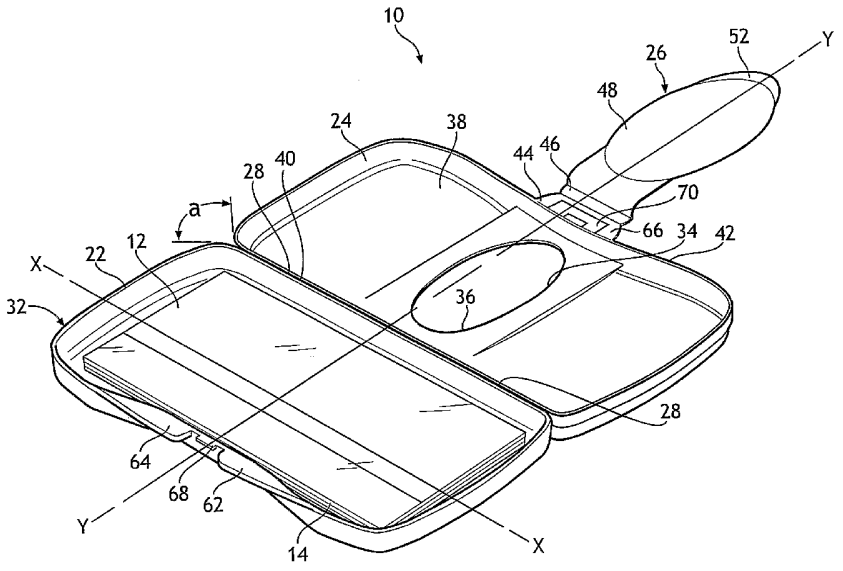

(57) Abstract: A dispenser is disclosed which is capable of dispensing articles from two locations. The dispenser includes first and second members pivotally connected together by a first hinge to form a first entrance into the dispenser. The first and second members are capable of housing a plurality of wet or dry, sheet-like articles. The first entrance provides reach-in access wherein multiple sheet-like articles can be withdrawn at one time. The second member also has a second entrance formed therein from which the sheet-like articles can be individually withdrawn. The dispenser further includes a third member secured to the second member at a first location and has a second hinge spaced apart from the first location. The first and second hinges are situated on opposite sides of the dispenser. The third member is capable of pivoting on the second hinge to cover the second entrance.

WO 2005/102131 A1

SE, SI, SK, TR), OAPI (BF, BJ, CF, CG, CI, CM, GA, GN, GQ, GW, ML, MR, NE, SN, TD, TG).

Published:

— *with international search report*

For two-letter codes and other abbreviations, refer to the "Guidance Notes on Codes and Abbreviations" appearing at the beginning of each regular issue of the PCT Gazette.

A DISPENSER CAPABLE OF DISPENSING SHEET-LIKE ARTICLES

BACKGROUND OF THE INVENTION

Sheet-like articles are available in a variety of shapes, sizes and compositions and can be either wet or dry. One common wet article is referred to as a "wet wipe" which is a pre-moistened, disposable towelette. Such wet wipes can be utilized in a variety of applications both domestic and industrial and can perform a variety of functions. Wet wipes are typically used to wipe surfaces both animate and inanimate, and may provide numerous benefits such as cleaning, cleansing, disinfecting, and skin care benefits. A common dry article is a tissue used by a human to blow his or her nose. One commercially available tissue is sold under the name KLEENEX®, which is a registered trademark of Kimberly-Clark Corporation, having an office at 401 North Lake Street, Neenah, Wisconsin 54956.

One particular application of sheet-like, pre-moistened articles is for wiping parts of a human body particularly when wash water is not available, for example, when traveling. Wipes are also commonly used for human cleansing and wiping in general, such as anal, perineal and genital cleansing, and face and hand cleansing. One example of such a wipe is an intimate feminine hygiene wipe. Wipes may also be used for application of substances to the body including removing or applying make-up, skin conditioners and medications. Another application of wipes is during diaper changes and also for the treatment of adult and baby dermatitis, partly caused by the use of diapers and incontinence undergarments. In addition, wipes are also applicable for wiping and or cleaning other surfaces or for the application of compositions to surfaces, for example, kitchen and bathroom surfaces, eyeglasses, shoes and surfaces which require cleaning in industry. Examples of industrial applications include cleaning surfaces of tools, machinery and raw material from dust, dirt, grease, chemical substances, etc. Wipes can also be used for the cleaning or grooming of household pets, like cats and dogs.

Various dispenser designs are commercially available today for housing, storing and dispensing such sheet-like articles. Some are large tubs or flexible packages that are several inches in vertical height that are designed to hold over eighty articles while other designs include slim travel packs that can contain less than twenty-five articles. Some dispensers allow for removal of an individual sheet or wipe while others permit multiple sheet-like articles or wipes to be simultaneously withdrawn from the dispenser. One issue

with many dispensers is the lack of ease in removing a single sheet-like article with one hand. For example, a mother in the act of changing an infant's diaper may be required to use her right hand to hold the baby still while using only her left hand to open and grab a wet wipe. The wet wipe is then used to wipe the buttock of the baby before a clean diaper is placed on the baby. Another issue that sometimes arises is that the user needs to remove several wipes from the dispenser at a single time. In this case, it is not efficient to remove the wipes one at a time. Therefore, there is a need for a dispenser that is capable of dispensing articles in a pop-up mode as well as in a reach-in mode.

Now a dispenser has been invented that can dispense articles either one at a time in a pop-up mode or provide reach-in access wherein several articles can be simultaneously withdrawn.

SUMMARY OF THE INVENTION

Briefly, this invention relates to a dispenser capable of dispensing articles from two locations. The dispenser includes first and second members pivotally connected together by a first hinge to create a first entrance into the dispenser. The first and second members are capable of housing a plurality of wet or dry, sheet-like articles. The first entrance provides reach-in access wherein multiple sheet-like articles can be withdrawn at one time. The second member also has a second entrance formed therein from which the sheet-like articles can be individually withdrawn in a pop-up mode. The dispenser further includes a third member secured to the second member at a first location and has a second hinge spaced apart from the first location. The first and second hinges are situated on opposite sides of the dispenser. The third member is capable of pivoting on the second hinge to cover the second entrance.

BRIEF DESCRIPTION OF THE DRAWINGS

Fig. 1 is a perspective view of a dispenser showing the first, second and third members in an open position revealing the interior of the dispenser.

Fig. 2 is a perspective view of a sheet-like article which can be housed in the dispenser shown in Fig.1.

Fig. 3 is a perspective view of a stack of interleaved sheet-like articles which are Z-folded and which can be housed in the dispenser shown in Fig.1.

Fig. 4 is a perspective view of a stack of non-interleaved sheet-like articles which are J-folded and which can be housed in the dispenser shown in Fig.1.

Fig. 5 is a top view of the dispenser shown in Fig. 1 when the second member is in a closed position and a third member is secured over the aperture.

Fig. 6 is a left side view of the dispenser shown in Fig. 5.

Fig. 7 is a right side view of the dispenser shown in Fig. 5.

Fig. 8 is an end view of the dispenser shown in Fig. 5 taken along the line 8--8.

Fig. 9 is a bottom of the dispenser shown in Fig. 5.

Fig. 10 is a cross-sectional view of the dispenser shown in Fig. 5 taken along line 10--10 and depicting a plurality of sheet-like articles stacked together and Z-folded with each sheet-like article being joined to an adjacent sheet-like article by a tear line.

Fig. 11 is a top view of the dispenser shown in Fig. 5 with the third member being pivotally moved to an open position.

Fig. 12 is a side view of the third member shown in Fig. 11 taken along line 12--12.

DETAILED DESCRIPTION

Referring to Figs. 1 and 5 – 8, a dispenser 10 is shown which is capable of housing, storing and dispensing a plurality of dry or wet sheet-like articles 12 from two locations. The dispenser 10 has a generally rectangular configuration with a longitudinal central axis X--X and a transverse central axis Y--Y, see Fig. 1, and a vertical axis Z--Z, see Fig. 8. The dispenser 10 also has an overall length L and an inside width W, see Fig. 5, and a height h, see Fig. 8. The dimensions of the dispenser 10 can vary to suit one's particular needs. The overall size of the dispenser 10 can be selected so as to be slim enough to easily fit into a woman's purse, into a diaper bag, into a glove compartment of a car, into a desk drawer, etc. The dispenser 10 may also fit into the enlarged pocket of an overcoat. The dispenser 10 is reusable and is capable of being refilled multiple times during its life. For the travel pack dispenser, as shown, the dimensions can range from between about 6 inches (about 15 centimeters (cm)) to about 12 inches (about 30 cm) in length, from between about 3 inches (about 7.6 cm) to about 6 inches (about 15 cm) in inside width, and from between about 0.25 inches (about 0.6 cm) to about 3.5 inches (about 9 cm) in height. More desirably, the dispenser 10 can range from between about 7 inches (about 18 cm) to about 10 inches (about 25 cm) in length, from between about 3.5 inches (about 8.9 cm) to about 5 inches (about 12.7 cm) in inside width, and from between about 0.5 inches (about 1.2 cm) to about 3 inches (about 7.6 cm)

in height. Most desirably, the dispenser 10 will have a height h of about 1 inch (about 2.5 cm).

The dispenser 10 is designed to house and store a plurality of the sheet-like articles 12 in a water resistance environment. For a dry sheet-like article, such as a dry facial tissue, the dispenser 10 will retain the articles 12 in a dry state and prevent moisture or liquid from contacting them. For a wet sheet-like article, such as a wet wipe, the dispenser 10 will allow the articles 12 to retain their moisture until the user is ready to withdraw and use the wet wipe. The wet or dry sheet-like articles 12 can be removed from the dispenser 10 either individually or as a group of two or more.

Referring to Fig. 2, a sheet like article 12 is shown having a longitudinal central axis X_1--X_1, a transverse central axis Y_1--Y_1, and a vertical axis Z_1--Z_1. By "sheet-like articles" it is meant relatively flat sheets that can be wet or dry to the touch and can include wet wipes, dry wipes, pre-moistened wipes, dry tissue, dry facial tissue, pre-moistened facial tissues, wet or dry towelettes, impregnated sheets, wet or dry towels, etc. Each sheet-like article 12 can have any desired geometrical cross-sectional configuration. Desirably, the sheet-like article 12 has either a square or rectangular cross-sectional shape. The sheet-like article 12 has a length l_1, a width w_1 and a thickness t_1. The length l_1 and width w_1 dimensions can vary depending upon one's needs and desires. However, the thickness t_1 dimension will usually range from between about 0.4 millimeters (mm) to about 5 mm. Desirably, each sheet-like article 12 has a thickness t_1 that ranges from between about 0.5 mm to about 3.5 mm. More desirably, each sheet-like article 12 has a thickness t_1 that ranges from between about 0.6 mm to about 3 mm. For example, one commercially available sheet-like article has a length l_1 of about 7.5 inches (about 19 cm), a width w_1 of about 7.5 inches (about 19 cm) and a thickness t_1 of less than about 1 mm, when it is in a non-folded state.

Referring now to Fig. 3, a plurality of the sheet-like articles 12 are shown arranged in a stack 14. By "stack" it is meant a quantity, a pile, an arrangement or group of three or more articles. Each stack 14 can include an orderly arrangement and can include up to 100 or more sheet-like articles12. Desirably, each stack 14 will contain from about 8 to about 50 sheet-like articles 12. More desirably, each stack 14 will contain from about 8 to about 40 sheet-like articles 12. Most desirably, each stack 14 will contain about 16 sheet-like articles 12. In Fig. 3, a plurality of Z-folded and interleaved sheet-like articles 12 are depicted forming the stack 14. The stack 14 has a longitudinal central axis X_2--X_2, a transverse central axis Y_2--Y_2, and a vertical axis Z_2--Z_2. In the stack 14, each of the sheet-like articles 12 is Z-folded to a reduced width w_2, with the width w_2 being less than

the initial unfolded width w_1, see Fig. 1. Desirably, the width w_2 of the folded sheet-like article 12 will range from between about 1 inch (about 2.5 cm) to about 5 inches (about 12.7 cm). More desirably, the width w_3 of the folded sheet-like article 12 will range from between about 2 inches (about 5 cm) to about 4 inches (about 10 cm). More desirably, the width w_2 of the folded sheet-like article 12 will be about 3.75 inches (about 9.5 cm).

Each of the sheet-like articles 12 also has a length l_2, which in Fig. 3, is equal to the length l_1. However, the sheet-like articles 12 can be folded lengthwise as well, if desired. Each of the sheet-like articles 12 has an upper edge 16 that can be easily grabbed or snatched. The upper edge 16 can be located on either side of the longitudinal central axis X_2--X_2. It is also advantageous that the upper edge 16 be visibly apparent. Each of the sheet-like articles 12 in the stack 14 is interleaved or sandwiched between a portion of an adjacent sheet-like article 12 such that as the upper most article 12 is removed from the stack 14, the subsequent sheet-like article 12 will be exposed and have its upper edge 16 available to be grabbed or snatched.

Referring now to Fig. 4, a plurality of sheet-like articles 12 are depicted which are arranged into a stack 18. In the stack 18, the sheet-like articles 12 are J-folded but are not interleaved together. Each of the sheet-like articles 12 has an upper edge 20 which contains a scallop design. The scallop edge 20 consists of a series of semicircular curved projections forming an ornamental border. The scallop design makes the upper edge 20 more visible to the ultimate consumer and the scallop design can also aid in allowing the user to grab the sheet-like article 12. The stack 18 also includes an orderly arrangement of the sheet-like articles 12, as was explained above with reference to the stack 14. The number of sheet-like articles 12 making up the stack 18 can also be of the quantity recited above. The stack 18 also has a longitudinal central axis X_3--X_3, a transverse central axis Y_3--Y_3, and a vertical axis Z_3--Z_3. In the stack 18, each of the sheet-like articles 12 are folded to a reduced width w_3, with the width w_3 being less than the initial unfolded width w_1, see Fig. 1. Desirably, the width w_3 of the folded sheet-like article 12 will range from between about 1 inch (about 2.5 cm) to about 5 inches (about 12.7 cm). More desirably, the width w_3 of the folded sheet-like article 12 will range from between about 2 inches (about 5 cm) to about 4 inches (about 10 cm). Most desirably, the width w_3 of the folded sheet-like article 12 will be about 3.75 inches (about 9.5 cm). Each of the sheet-like articles 12 also has a length l_3 which, in Fig. 4, is equal to the length l_1. However, as explained above, the sheet-like articles 12 can be folded lengthwise, if desired. As with the stack 14, the upper edge 20 of each of the sheet-like articles 12 making up the stack 18, can each be easily grabbed or snatched.

It should be noted that the sheet-like articles 12 can be absorbent or non-absorbent. By "absorbent" it is meant that the sheet-like articles 12 are capable of absorbing a liquid, a chemical solution, a non-solid substance, etc. An example of a liquid is water, an example of a chemical solution is mouthwash, and an example of a non-solid substance is a makeup cream. The sheet-like articles 12 can be oriented in the dispenser 10 in a relatively flat arrangement or be folded in some fashion. The longitudinal axis X_2--X_2 or X_3--X_3 of the folded sheet-like articles 12 should be aligned essentially parallel to the longitudinal axis X--X of the dispenser 10, see Fig. 1. This orientation will facilitate removal of the sheet-like articles 12 from the dispenser 10. Common ways to fold the sheet-like articles 12 include, but are not limited to, C-folds, J-folds, Z-folds, etc.

The sheet-like articles 12 can be formed from synthetic or natural fibers or a combination of such fibers. Cotton and wood pulp fibers are two examples of natural fibers. Synthetic fibers can include polyolefin fibers, such as polypropylene and polyethylene fibers. The sheet-like articles 12 can be moistened with an aqueous composition which contains amongst others things, surfactants, preservatives, lotions, solutions, oils, medication, scents, fragrances, etc. or any combination thereof. One example of a baby wet wipe is HUGGIES ORIGINAL ® which is a registered trademark of Kimberly-Clark Corporation having an office at 401 North Lake Street Neenah, Wisconsin 54956. This wet wipe contains water, potassium laureth phosphate, glycerin, polysorbate 20, tetrasodium EDTA, DMDM hydantoin, methylparaben, malic acid and a fragrance. The sheet-like articles 12 are typically packaged in the dispenser 10 to facilitate easy storage, transport and retrieval of the articles 12 for various uses.

The dispenser 10 is unique in that it allows the sheet-like articles 12 to be removed or withdrawn either individually or as a group of two or more articles. One or more of the sheet-like articles 12 can be removed through a first entrance by reaching into the dispenser 10 or an individual sheet-like article 12 can be withdrawn through a second entrance in a pop-up fashion. The dispenser 10 can be manufactured in various sizes and shapes and can be constructed from a variety of materials. The dispenser 10 can be constructed from a relatively rigid or semi-rigid material. By "rigid or semi-rigid" material it is meant a material that will maintain its overall shape and will not substantially deform when normally handled for its intended purpose. A "rigid or semi-rigid" material is commonly greater than 0.5 millimeters (mm) in thickness and can be formed from almost any type of material. A desirable material from which the dispenser 10 can be formed is a thermoplastic material. The thermoplastic can be a polyolefin such as polypropylene, polyethylene, or a copolymer formed therefrom. Other kinds of thermoplastics can also

be used. The dispenser 10 can also be formed from ferrous and nonferrous metals, metal alloys, aluminum, wood, plywood, wood veneer, thick cardboard, a laminate of different kinds of plastics, a combination of plastic and paper laminates, plastic film laminates, thermoplastic strands inserted into a laminate, or a combination thereof. In addition, other kinds of rigid or semi-rigid materials known to those skilled in the art can also be used.

It should be noted that very flexible materials having a thickness of less than about 0.4 mm are not interpreted as being a "rigid or semi-rigid" material. Flexible wrapping material such as aluminum foil, thin plastic films, very thin laminates, paper bags, etc. are not considered to be rigid or semi-rigid materials.

Desirably, the dispenser 10 is formed from a thermoplastic material that can be injection molded. Normally, the injection molded material will have a thickness ranging from between about 0.5 mm to about 6 mm. More desirably, the injection molded material will have a thickness ranging from between about 0.6 mm to about 5 mm. Most desirably, the injection molded material will have a thickness ranging from between about 0.75 mm to about 2 mm.

Referring now to Figs. 1 and 5 - 9, the dispenser 10 includes a first member 22, a second member 24 and a third member 26. The first and second member, 22 and 24 respectively, are hollow members having a depth dimension to each and having an open surface or wall. Each of the first and second members, 22 and 24 respectively, are capable of holding or retaining a quantity of the sheet-like articles 12. The first and second members, 22 and 24 respectively, are pivotally connected by a first hinge 28. The first hinge 28 extends along a major portion of one side of the dispenser 10. The first and second members 22 and 24 can be formed by injection molding. By injection molding the first and second members, 22 and 24 respectively, together, they can be integrally formed as a single entity. The hinge 28 can also be injection molded along with the first and second members, 22 and 24 respectively. The hinge 28 can be a living hinge. By a "living hinge" it is meant a hinge that is integrally formed with and constructed from the same material as was used to form the first and second members, 22 and 24 respectively. Usually, a living hinge has a smaller thickness relative to the overall thickness of the two members to which it is connected.

As shown in Fig. 8, the dispenser 10 is depicted as a slim travel pack that can be initially filled with a plurality of sheet-like articles 12. The dispenser 10 has a height "h" which can range from between about 0.25 inches (about 0.6 centimeters) to about 3.5 inches (about 9 centimeters). Desirably, the height "h" of the dispenser 10 ranges from between about 0.5 inches (about 1.3 centimeters) to about 2 inches (about 5 centimeters).

More desirably, the dispenser 10 has a height "h" of about 1 inch (about 2.5 centimeters). As explained above, the sheet-like articles 12 can be stacked in the dispenser 10 in an interleaved or non-interleaved array. In either case, the upper edge 16 or 20 of each sheet-like article 12 should extend lengthwise along the longitudinal central axis X--X of the dispenser 10.

Referring now to Fig. 10, one will notice that each of the sheet-like articles 12 is temporarily connected or joined to an adjacent sheet-like article 12 by a tear line 30. The tear line 30 can be a perforation line, a score line, a series of holes punched in the material, a necked or reduced area of thickness, a zone of weakness, etc. that is easily broken as one pulls on the uppermost sheet-like article 12. The sheet-like articles 12 can also be connected to one another by an adhesive. For example, a clip of eight sheet-like articles 12 can be adhesively connected to a second clip of sheet-like articles 12 by a continuous or non-continuous line of adhesive. By so joining adjacent sheet-like articles 12, one can be assured that a subsequent sheet-like article 12 will follow the preceding sheet-like article 12 toward the exit opening formed in the dispenser 10. The tear line 30 is designed to break or sever as the upper most sheet-like article 12 is almost completely withdrawn from the dispenser 10. Once the tear line 30 breaks, the upper most sheet-like article 12 will be completely severed from the next adjacent sheet-like article 12.

One will also notice from Fig. 10, that when the sheet-like articles 12 are temporarily connected or joined to one another, such as by the tear line 30, that it is possible to fold the sheet-like articles 12 in various ways. This means that each sheet-like article 12 does not have to be folded exactly the same way as an adjacent sheet-like article 12 is folded. In Fig. 10, the uppermost sheet-like article 12 is Z-folded in a first direction and the subsequent sheet-like article 12 is Z-folded in an opposite direction. Various folding configurations can be utilized which may increase the number of sheet-like articles 12 that can be housed in the dispenser 10 at one time.

Referring again to Fig. 1, the first and second members, 22 and 24 respectively, are hinged together and can pivot or rotate between a close position and an open position, relative to one another. In Fig. 1, the second member 24 is shown pivoted on the first hinge 28 and rotated clockwise to an open position thereby forming a first entrance 32 into the dispenser 10. When the second member 24 is so pivoted and the angle α is at least 90 degrees relative to the first member 22, the first entrance 32 will be equal to or larger than the entire upper surface of the exposed sheet-like article 12. The length l_2 and the width w_2 of the stack 14 of the sheet-like articles 12 are less than the overall length l and the inside width w of the dispenser 10. This size difference is

important for it permits the user to easily reach-in with his or her hand and grab or snatch as many of the sheet-like articles 12 as he or she wishes. It should be readily apparent to the reader that the first entrance 32 allows for one or more of the sheet-like articles 12 to be removed or withdrawn at a single time. In fact, the entire stack 14 of the sheet-like articles 12 could be withdrawn by the user at one time, if desired.

Referring to Figs. 1 and 5, the second member 24 of the dispenser 10 also has a second entrance 34 formed therein. The second entrance 34 is shown as an aperture 36 formed completely through a top wall 38 of the second member 24. Desirably, the top wall 38 is a planar surface which is vertically oriented relative to the upper surface of the stack 14 of the sheet-like articles 12. The second entrance 34 has a surface area of at least about 20 cm^2. Desirably, the second entrance 34 has a surface area of at least about 25 cm^2. The second entrance 34 is depicted as being aligned along both the longitudinal and transverse axes, X--X and Y--Y respectively, of the dispenser 10, when closed. In fact, the intersection of the longitudinal and transverse axes, X--X and Y--Y respectively, forms the center of the aperture 36. It should be noted that the second entrance 34 can be offset from the longitudinal and transverse axes, X--X and Y--Y respectively, if desired. The second entrance 34 is shown being elliptical or oval in configuration, although other geometrical configurations can also be used. The elliptical or oval shaped second entrance 34 has a length l_4 measured along its major axis and a width w_4 measured along its minor axis. The major axis or length l_4 of the second entrance 34 should to be aligned approximately parallel to the transverse axis Y--Y of the dispenser 10 and the minor axis or width w_4 of the second entrance 34 should be aligned approximately parallel to the longitudinal axis X--X of the dispenser 10.

The dimensions of the second entrance 34 or the aperture 36 are also important to ensure that the second entrance 34 of the dispenser 10 functions properly. The second entrance 34 should have a transverse dimension or length l_4 that is at least about 65% of the inside width w of the dispenser 10. For example, if the inside width w if the dispenser is 10.5 cm, then the transverse dimension or length l_4 of the second entrance 34 should be at least about 6.8 cm. Another way of describing the length l_4 of the major axis of the second entrance 34 is to compare it to the width w_3 of the folded sheet-like articles 12. Desirably, the second entrance 34 has a length l_4 which ranges from between about 60% to 150% of the width w_3 of the folded sheet-like articles 12. More desirably, the second entrance 34 has a length l_4 which ranges from between about 70% to 100% of the width w_3 of the folded sheet-like articles 12. Most desirably, the second entrance 34 has a length l_4 which ranges from between about 75% to 95% of the width w_3 of the folded

sheet-like articles 12. For example, if the folded sheet-like articles 12 have a width of about 3.5 inches (about 8.9 cm), then the second entrance 34 should have a length l_4 of at least about 2.1 inches (about 5.3 cm).

In addition, the second entrance 34 or the aperture 36 must have a width w_4 which is at least about 0.75 inches (about 1.9 cm) in order to accommodate the width of a user's thumb and index finger. Desirably, the second entrance 34 has a width w_4 which ranges from between about 0.75 inches (about 1.9 cm) to about 3.5 inches (about 9 cm). More desirably, the second entrance 34 has a width w_4 which ranges from between about 1 inch (about 2.5 cm) to about 2.5 inches (about 6.3 cm). Most desirably, the second entrance 34 has a width w_4 which ranges from between about 1 inch (about 2.5 cm) to about 2 inches (about 5 cm).

Referring again to Figs. 1, 5 and 8 -11, the dispenser 10 also has a first longitudinal edge 40 spaced apart from and oppositely aligned to a second longitudinal edge 42. The first and second longitudinal edges, 40 and 42 respectively, are aligned approximately parallel to the longitudinal central axis X--X of the dispenser 10. The first hinge 28 is located along or adjacent to the first longitudinal edge 40. As the first member 22 pivots on the first hinge 28 it will rotate away from the second member 24, and cause the first entrance 32 into the dispenser 10 to open. The first and second members 22 and 24 can pivot on the hinge 28, relative to the first longitudinal edge 40, and move away from the second longitudinal edge 42 to open the first entrance 32.

Referring now to Figs. 1, 5 - 7, and 10 - 12, the third member 26 of the dispenser 10 is integrally formed with the second member 24 along or adjacent to the second longitudinal edge 42. The third member 26 can be integrally formed with the second member 24 by injection molding the two members together. In Figs. 1 and 11, the third member 26 is shown in an open position and in Figs. 5 -7 and 10 the third member 26 is depicted in a closed position. When the third member 26 is in the closed position, it will completely cover the second entrance 34. The third member 26 is integrally joined to the second member 24 at a first location 44. The third member 26 has a second hinge 46 spaced apart from the first location 44. The second hinge 46 can be integrally formed with the third member 26 and can be a living hinge. The second hinge 46 is located along or adjacent to the second longitudinal edge 42. This means that the second hinge 46 is spaced on an opposite side of the dispenser 10 and will cause the third member 26 to pivot away from the second member 24 when moving toward an open position. This pivoting or rotation will be in an opposite direction to the direction that the first hinge 28

permits the second member 24 to pivot away from the first member 22 when moving toward an open position.

The exact distance that the second hinge 46 is spaced away from the first location 44 can vary. Desirably, this distance can range from between about 0.1 inches (about 0.25 cm) to about 1 inch (about 2.5 cm). As stated above, the third member 26 is capable of pivoting on the second hinge 46 to either cover or open the aperture 36. When the third member 26 is pivoted to its open position, the sheet-like articles 12 being housed in the dispenser 10 can be individually withdrawn through the second entrance 34. In Figs. 1 and 11, the third member 26 is shown pivoted or rotated back away from the second entrance 34 through an angle of about 180 degrees to a position wherein the second entrance 34 is completely open. In this orientation, the user can easily insert his or her thumb and index finger into the aperture 36 and grab the upper edge 16 of the sheet-like article 12. The uppermost sheet-like article 12 can then be individually withdrawn through the aperture 36 and be removed from the dispenser 10.

It should be noted that the third member 26 pivots away from the second member 24 to open the second entrance 34 in a direction opposite to the direction that the second member 24 pivots away from the first member 22 to open the first entrance 32. Another way of phrasing this is to say that the third member 26 pivots away from the second member 24 to open the second entrance 34 at a 180 degree orientation to the direction that the second member 24 pivots away from the first member 22 to open the first entrance 32.

The third member 26 can be of almost any geometrical configuration. Desirably, the third member 26 has a generally elliptical or oval shaped portion 48 so as to conveniently nest over the aperture 36. The top wall 38 of the second member 24 can be recessed in an area where the third member 26 will close over the aperture 36. Extending outward from the elliptical or oval shaped portion 48 is a neck portion 50. The neck portion 50 can be rectangular, square, trapezoidal, or of any other desired configuration. The terminal end of the neck portion 50 is at the second hinge 46. The elliptical or oval shaped portion 48 has an exterior or upper surface 52 and an interior or lower surface 54. Desirably, the exterior surface 52 of the elliptical or oval shaped portion 48 will be flush with the top wall 38 of the second member 24 when the third member 26 is in a closed position.

Still referring to Fig. 11, a double ringlike shoulder 56 projects outward from the interior surface 54 of the elliptical or oval shaped portion 48 and creates an elliptical channel 58 therebetween. This elliptical channel 58 engages with an elliptical rim 60

formed about the periphery of the aperture 36 when the third member 26 is in its closed position and forms a moisture barrier. The dimensions of the shoulder 56 and the channel 58 can be adjusted such that a tight or interference fit is obtained. Such a tight or interference fit will secure the third member 26 to the second member 24 and insure a seal is formed. It should also be noted that downward pressure on the top wall 38 of the second member 24 will not destroy the moisture barrier for the third member 26 is designed to flex downward as well and remain engaged to the second member 24.

The third member 26 can also contain a locking mechanism, not shown but known to those skilled in the art, to secure the third member 26 in a closed position over the second entrance 34. One example of a locking mechanism can be a tab and latch located between the second member 24 and the interior surface 54 of the third member 26. As the latch passes over the tab, it will lock the second and third members, 24 and 26 respectively, together.

The elliptical or oval shape of the third member 26 also serves another useful function in that it is sufficiently large to enables the user of the dispenser 10 to use the third member 26 to hold the dispenser 10 stationary. The third member 26 is capable of pivoting or rotating at least about 180 degrees from its closed position. Desirably, the third member 26 can pivot or rotate at least about 225 degrees from its closed position, and more desirably, at least about 270 degrees from its closed position. For example, the user could position his or her elbow, knee or other body part on the third member 26, when it is in an open position having pivoted about 180 degrees from its closed position, to hold the dispenser 10 stationary while removing one or more sheet-like articles 12. It should be mentioned that if the dispenser 10 is positioned on the edge of a table, the third member 26 can be opened from between about 225 degrees to about 270 degrees from its closed position and the user can position his or her hip or thigh against the third member 26 to hold the dispenser 10 stationary. In addition, when the third member 26 is opened about 180 degrees from its closed position, the consumer can place a diaper bag, a purse or any other heavy object on top of it to hold the dispenser stationary. This ability to use the third member 26 to hold the dispenser 10 stationary without using one's hands is very beneficial.

Referring again to Figs. 1, 5, 7, 9 and 11, the dispenser 10 also possesses an easy opening mechanism that can be activated with only one hand. This one hand opening feature is obtained by forming a pair of spaced apart finger tabs 62 and 64 on the first member 22. The pair of finger tabs 62 and 64 are positioned along the second longitudinal edge 42 and project outward therefrom. In addition, a single finger tab 66 is

formed on the second member 24. The finger tab 66 is also positioned along the second longitudinal edge 42 and project outward therefrom. The finger tab 66 is positioned between the pair of finger tabs 62 and 64 and can slightly overlap the finger tabs 62 and 64, if desired. It should be noted that alternatively, the pair of finger tabs 62 and 64 could be formed on the second member 24 and the single finger tab 66 could be formed on the first member 22, if desired. The finger tabs 62, 64 and 66 project outwardly away from the second longitudinal edge 42 by at least about 0.25 inches (about 0.6 cm) and provide an easy means for the user to open the first entrance 32 into the dispenser 10.

Referring again to Fig. 1, the first member 22 also has an outwardly projecting lip 68 situated between the pair of finger tabs 62 and 64. The lip 68 is designed to mate with a catch 70 formed on the lower surface of the finger tab 66. As downward pressure is applied to the upper surface of the second member 24, the catch 70 will move downward over the lip 68 and lock therewith. To unlock the dispenser 10 and open the first entrance 32, the user simply has to position his or her thumb on top of one of the outer finger tabs 62 or 64 and position his or her index finger below the middle finger tab 66. By pulling up with his or her index finger, the catch 70 will be released from the lip 68 and the second member 24 will pivot on the first hinge 28. A gentle nudge with the hand on the inside surface of the second member 24 will move it to the fully open position.

It should be noted that the third member 26 can remain in a closed position covering the second entrance 34 when the first entrance 32 is opened. Likewise, the first entrance 32 can remain closed while the second entrance 34 is opened. The first and second entrances, 32 and 34 respectively, of the dispenser 10 can be opened at the same time, if desired.

While the invention has been described in conjunction with several specific embodiments, it is to be understood that many alternatives, modifications and variations will be apparent to those skilled in the art in light of the aforegoing description. Accordingly, this invention is intended to embrace all such alternatives, modifications and variations that fall within the spirit and scope of the appended claims.

We claim:

1. A dispenser capable of dispensing articles from two locations comprising:

a) a first member;

b) a second member pivotally connected to said first member to form a first entrance into said dispenser, said first and second members capable of housing a plurality of articles, and said second member having a second entrance formed therein; and

c) a third member secured to said second member at a first location and having a hinge spaced apart from said first location, and said third member capable of pivoting on said hinge to cover said second entrance.

2. The dispenser of claim 1 wherein said first, second and third members are integrally formed as a single entity.

3. The dispenser of claim 2 wherein said single entity is formed by injection molding.

4. The dispenser of claim 1 wherein said dispenser has a generally rectangular configuration with a longitudinal axis, a transverse axis and a vertical axis, said dispenser having a first longitudinal edge spaced apart and oppositely aligned to a second longitudinal edge, said first member being pivotally connected to said second member by a first hinge located along said first longitudinal edge, and said third member capable of pivoting on said hinge which is located along said second longitudinal edge.

5. The dispenser of claim 4 wherein said second entrance is an aperture having an elliptical configuration with a major axis aligned parallel to said transverse axis of said dispenser.

6. The dispenser of claim 4 wherein said dispenser has a height, measured along said vertical axis, of about 1 inch.

7. The dispenser of claim 1 wherein said third member can remain in a closed position coving said second entrance when said first entrance is opened.

8. The dispenser of claim 1 wherein said third member pivots away from said second member to open said second entrance in a direction opposite to the direction that said second member pivots away from said first member to open said first entrance.

9. The dispenser of claim 7 wherein said third member pivots away from said second member to open said second entrance at a 180° orientation to the direction that said second member pivots away from said first member to open said first entrance.

10. A dispenser capable of dispensing articles from two locations comprising:

a) a first member;

b) a second member pivotally connected to said first member by a first hinge to form a first entrance into said dispenser, said first and second members capable of housing a plurality of sheet-like articles, and said second member having a second entrance formed therein; and

c) a third member secured to said second member at a first location and having a second hinge spaced apart from said first location, said third member capable of pivoting on said second hinge to cover said second entrance, and said first, second and third members being formed as a single entity.

11. The dispenser of claim 10 wherein said second member has an upper surface, and said third member has an upper surface which is substantially flush with said upper surface of said second member when said third member is covering said second entrance.

12. The dispenser of claim 10 wherein said dispenser has a generally rectangular configuration with a longitudinal axis, a transverse axis and a vertical axis, said dispenser having a first longitudinal edge spaced apart and oppositely aligned to a second longitudinal edge, and said dispenser having a height, measured along said vertical axis, of less than about 3 inches.

13. The dispenser of claim 12 wherein said second member is pivotally connected to said first member along said first longitudinal edge and said third member is secured to said second member along said second longitudinal edge.

14. The dispenser of claim 12 wherein said first member has a pair of spaced apart finger tabs projecting transversely outward from said second longitudinal edge, said second member has a single finger tab projecting transversely outward from said second longitudinal edge, and said single finger tab is positioned between said pair of finger tabs to enable said second member to be easily opened by a user with either hand.

15. The dispenser of claim 12 wherein each of said sheet-like articles is folded to a predetermined width, said second entrance has an elliptical configuration with a major axis aligned parallel to said transverse axis, and said second entrance has a maximum dimension which ranges from between about 70% to about 100% of the width of said sheet-like articles.

16. A dispenser capable of dispensing articles from two locations comprising:

a) a first member;

b) a second member pivotally connected to said first member by a first hinge to form a first entrance into said dispenser, said first and second members capable of housing a plurality of folded sheet-like articles each having a width, said second member having a second entrance formed therein and said second entrance having a maximum dimension which ranges from between about 70% to about 100% of the width of said folded sheet-like articles; and

c) a third member secured to said second member at a first location and having a second hinge spaced apart from said first location, and said third member capable of pivoting on said second hinge to cover said second entrance.

17. The dispenser of claim 16 wherein said second entrance has a maximum dimension which ranges from between about 75% to about 95% of the width of said folded sheet-like articles.

18. The dispenser of claim 16 wherein said second entrance has an elliptical configuration having a major axis aligned parallel to the transverse axis of said dispenser, and said second entrance has an area of at least about 20 cm^2.

19. The dispenser of claim 16 wherein said second entrance has an area of at least about 25 cm^2.

20. The dispenser of claim 16 wherein said third member pivots away from said second member to open said second entrance in a direction opposite to the direction that said second member pivots away from said first member to open said first entrance.

21. The dispenser of claim 16 wherein said third member can pivot at least about 180 degrees from its position wherein it covers said second entrance and be used to hold said dispenser stationary.

22. The dispenser of claim 21 wherein said third member can pivot at least about 225 degrees from its position wherein it covers said second entrance and be used to hold said dispenser stationary.

23. The dispenser of claim 22 wherein said third member can pivot at least about 270 degrees from its position wherein it covers said second entrance and be used to hold said dispenser stationary.

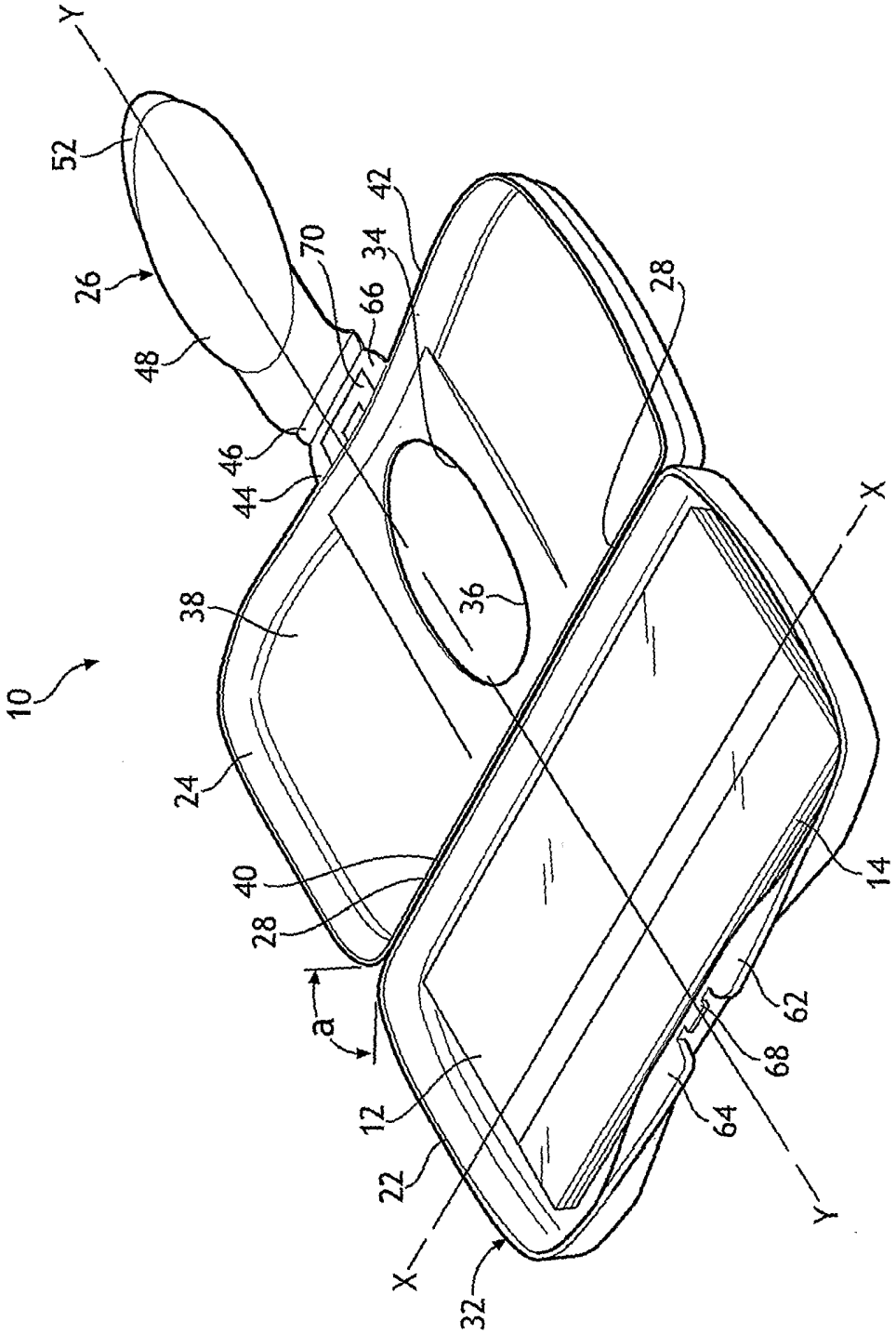
Y
52
26
48
70
66
34
42
28
46
44
38
36
X
10
24
40
28
a
12
22
X
32
62
68
64
14
Y

FIG. 1

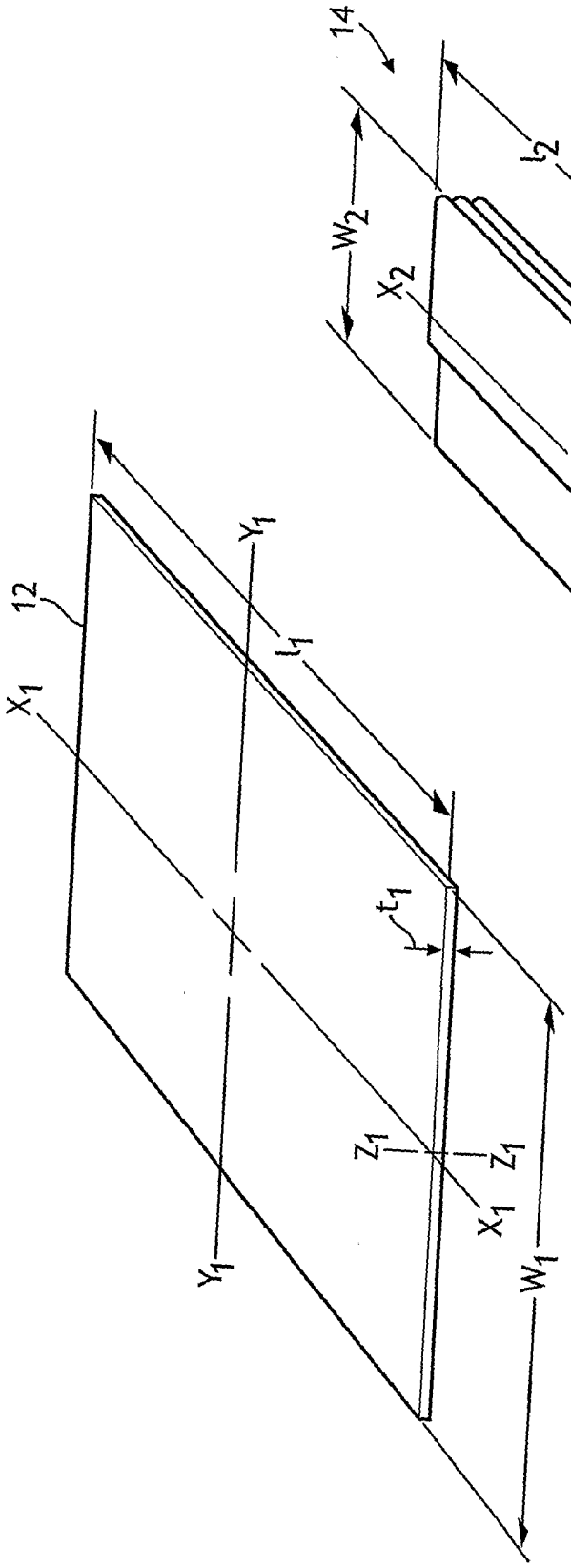

FIG. 2

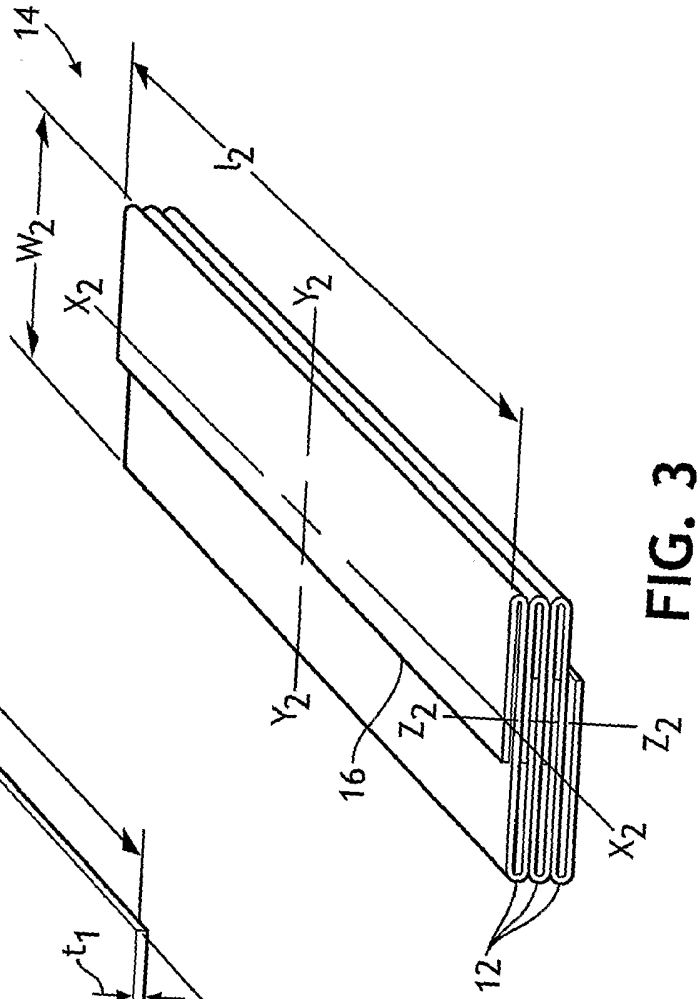

FIG. 3

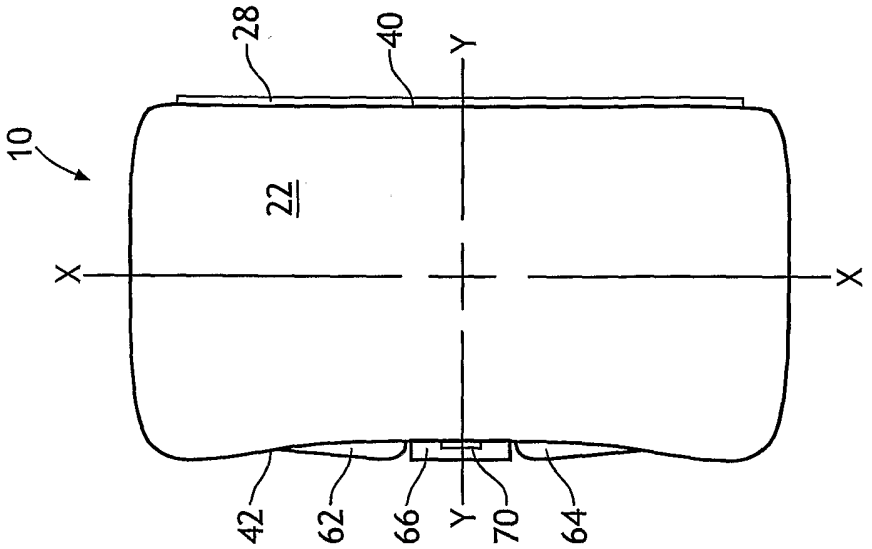

FIG. 9

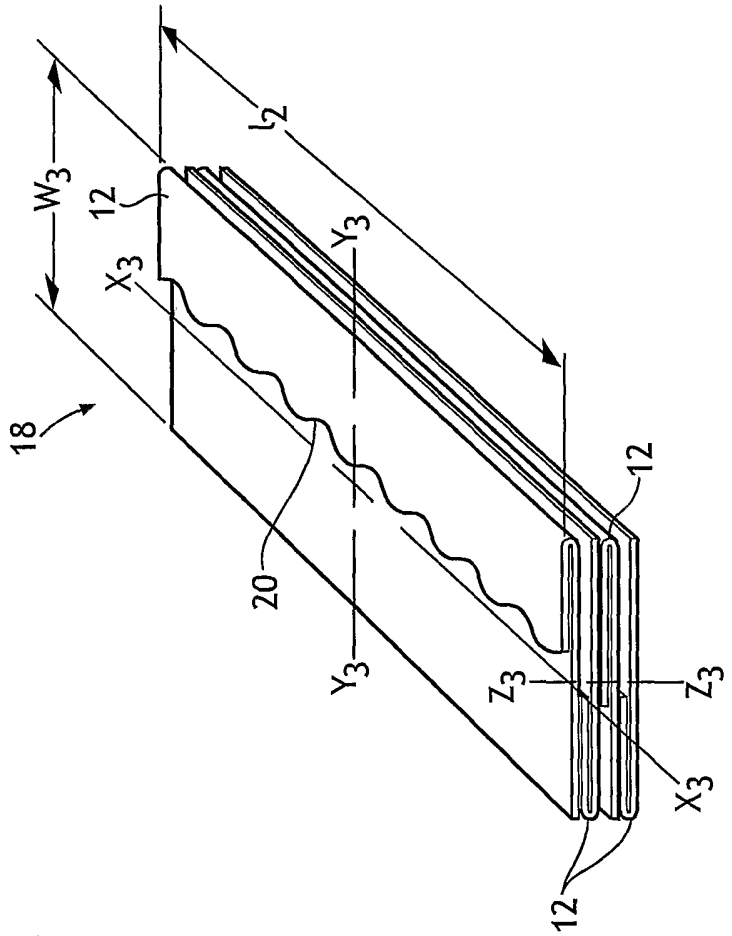

FIG. 4

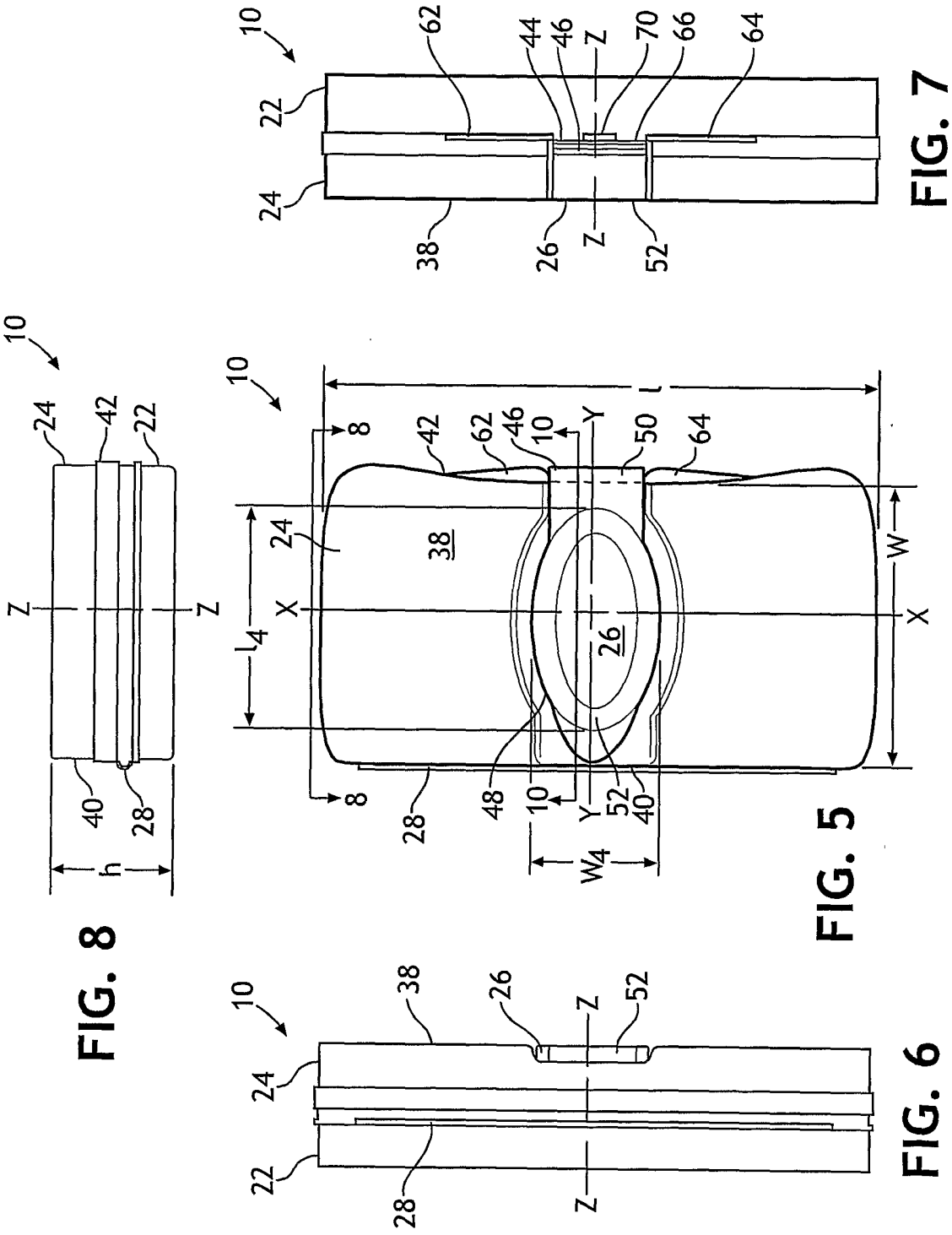

FIG. 7

FIG. 8

FIG. 5

FIG. 6

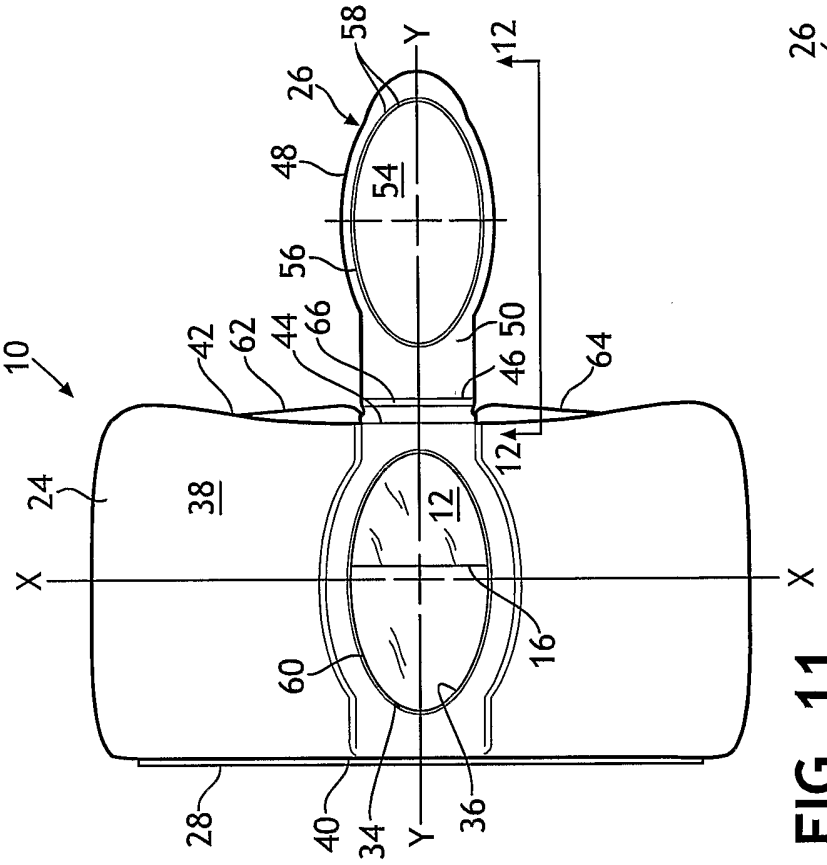

FIG. 11

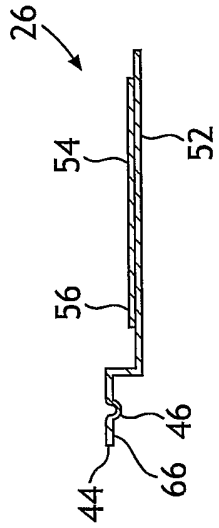

FIG. 12

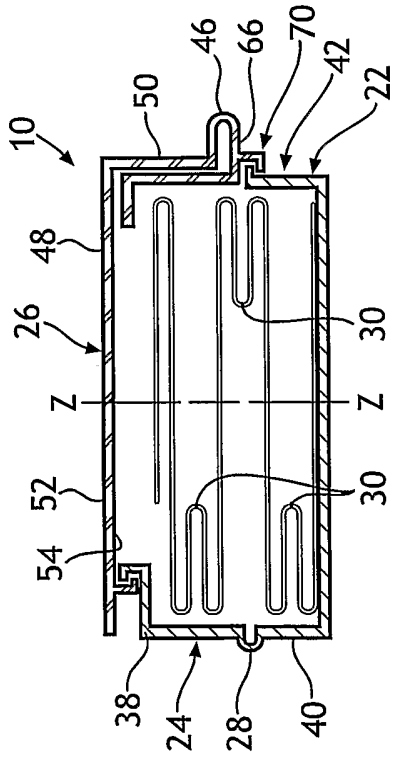

FIG. 10

INTERNATIONAL SEARCH REPORT

Ii ional Application No
PCT/US2005/005118

A. CLASSIFICATION OF SUBJECT MATTER
IPC 7 A47K10/42

According to International Patent Classification (IPC) or to both national classification and IPC

B. FIELDS SEARCHED

Minimum documentation searched (classification system followed by classification symbols)
IPC 7 A47K B65D

Documentation searched other than minimum documentation to the extent that such documents are included in the fields searched

Electronic data base consulted during the international search (name of data base and, where practical, search terms used)

EPO-Internal, WPI Data, PAJ

C. DOCUMENTS CONSIDERED TO BE RELEVANT

Category °	Citation of document, with indication, where appropriate, of the relevant passages	Relevant to claim No.
X	EP 0 697 344 A (FRONTIER PLASTICS LIMITED) 21 February 1996 (1996-02-21) the whole document	1-3, 7-10,16
Y		4,13
Y	WO 03/002416 A (THE PROCTER & GAMBLE COMPANY) 9 January 2003 (2003-01-09) the whole document	4,13
A	US 6 102 247 A (CRAWFORD ET AL) 15 August 2000 (2000-08-15) the whole document	4,13

☐ Further documents are listed in the continuation of box C.

☒ Patent family members are listed in annex.

° Special categories of cited documents :

"A" document defining the general state of the art which is not considered to be of particular relevance

"E" earlier document but published on or after the international filing date

"L" document which may throw doubts on priority claim(s) or which is cited to establish the publication date of another citation or other special reason (as specified)

"O" document referring to an oral disclosure, use, exhibition or other means

"P" document published prior to the international filing date but later than the priority date claimed

"T" later document published after the international filing date or priority date and not in conflict with the application but cited to understand the principle or theory underlying the invention

"X" document of particular relevance; the claimed invention cannot be considered novel or cannot be considered to involve an inventive step when the document is taken alone

"Y" document of particular relevance; the claimed invention cannot be considered to involve an inventive step when the document is combined with one or more other such documents, such combination being obvious to a person skilled in the art.

"&" document member of the same patent family

Date of the actual completion of the international search	Date of mailing of the international search report
15 June 2005	22/06/2005

Name and mailing address of the ISA	Authorized officer
European Patent Office, P.B. 5818 Patentlaan 2 NL – 2280 HV Rijswijk Tel. (+31–70) 340–2040, Tx. 31 651 epo nl, Fax: (+31–70) 340–3016	Delzor, F

INTERNATIONAL SEARCH REPORT

Information on patent family members

ıtional Application No
PCT/US2005/005118

Patent document cited in search report		Publication date	Patent family member(s)		Publication date
EP 0697344	A	21-02-1996	DE	69506495 D1	21-01-1999
			DE	69506495 T2	22-07-1999
			EP	0697344 A1	21-02-1996
WO 03002416	A	09-01-2003	BR	0210618 A	28-09-2004
			CA	2451793 A1	09-01-2003
			CN	1511103 A	07-07-2004
			EP	1401716 A2	31-03-2004
			JP	2004531436 T	14-10-2004
			MX	PA03011182 A	30-07-2004
			WO	03002416 A2	09-01-2003
			US	2003006253 A1	09-01-2003
			ZA	200308485 A	14-07-2004
US 6102247	A	15-08-2000	AU	2312199 A	21-02-2000
			DE	69912796 D1	18-12-2003
			DE	69912796 T2	23-09-2004
			EP	1100731 A1	23-05-2001
			JP	2002521284 T	16-07-2002
			WO	0006465 A1	10-02-2000