United States Patent [19]

Van Meter, Jr. et al.

[11] **Des. 257,950**

[45] ** **Jan. 20, 1981**

[54] **TUBING CLIP**

[75] Inventors: **Arch W. Van Meter, Jr.**, Barrington, Ill.; **Roger W. Tetzlaff**, Somerville, Ala.

[73] Assignee: **Ryder International Corporation**, Arab, Ala.

[**] Term: **14 Years**

[21] Appl. No.: **944,871**

[22] Filed: **Sep. 22, 1978**

[51] **Int. Cl.** ..... **D8—08**

[52] **U.S. Cl.** **D8/396**; D8/395; D24/27

[58] **Field of Search** ..... 248/73, 74 A, 201; D24/27; D8/382, 394, 396, 395; 24/255 R, 255 BS, 257, 73 SA; 85/5 R; 128/133

[56] **References Cited**

U.S. PATENT DOCUMENTS

Re. 22,564	11/1944	Murphy	24/73 SA
D. 228,377	9/1973	Martz	D8/396
D. 234,204	1/1975	Miller et al.	D24/27
D. 241,314	9/1976	Hug	D8/395
1,015,484	1/1912	Erickson	248/71
2,058,733	10/1936	Smith	24/73 SA
2,068,932	1/1937	Quarnstrom	24/73 SA
2,128,005	8/1938	Lombard	85/5 R
2,171,925	9/1939	Fitts	85/5 R
3,012,745	12/1961	Donovan	248/71
3,126,184	3/1964	Kropp	248/73
3,154,281	10/1964	Frank	248/201
3,213,500	10/1965	Thompson	24/73 SA
3,259,347	7/1966	Yates	248/73
3,501,117	3/1970	Soltysik	248/71
3,905,570	9/1975	Nieuwveld	248/71
3,944,177	3/1976	Yoda	248/74 A
4,023,758	5/1977	Yuda	248/73
4,131,258	12/1978	Okuda et al.	248/73

FOREIGN PATENT DOCUMENTS

2725090	6/1977	Fed. Rep. of Germany	248/71 X

Primary Examiner—Bernard Ansher

Attorney, Agent, or Firm—Richard R. Trexler

[57] **CLAIM**

The ornamental design for a tubing clip, substantially as shown and described.

DESCRIPTION

FIG. 1 is a perspective view of our tubing clip with the mounting portion facing downwardly;

FIG. 2 is a front elevational view of our tubing clip as shown in FIG. 1;

FIG. 3 is a side elevational view of the clip of FIG. 2;

FIG. 4 is a top plan view of the tubing clip of FIGS. 1-3;

FIG. 5 is a bottom plan view of our clip.

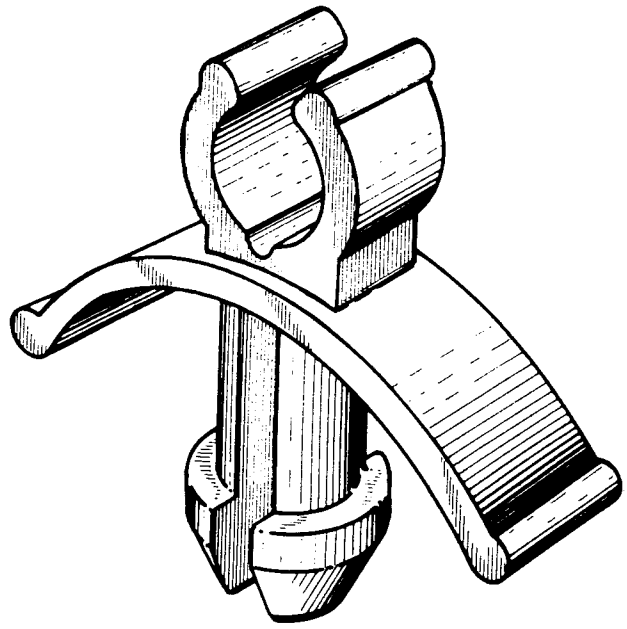

FIG. 1

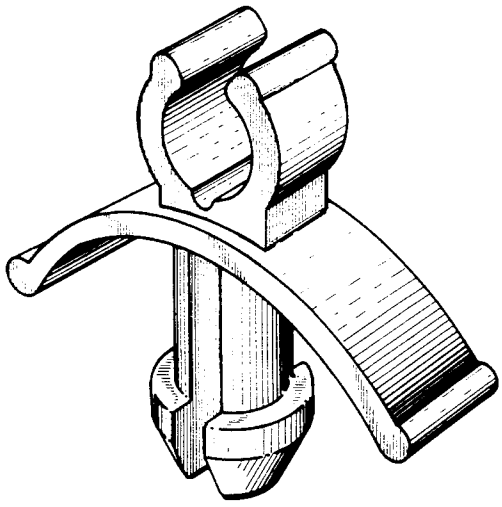

FIG. 2

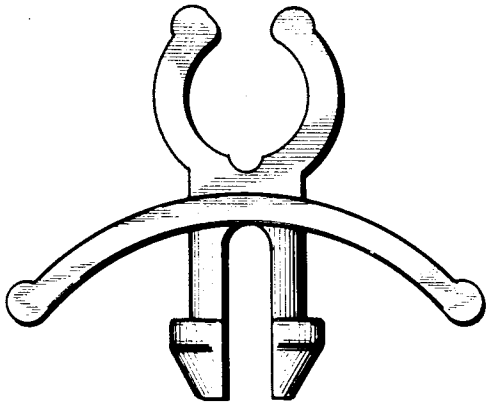

FIG. 3

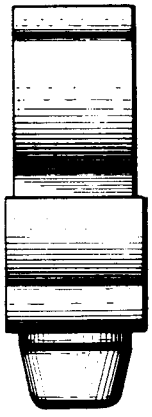

FIG. 4



FIG. 5

