Dec. 18, 1928. 1,696,074

F. E. BARBER

CASTING MEANS FOR TYPOGRAPHICAL MACHINES

Filed March 10, 1928

Fig. 1.

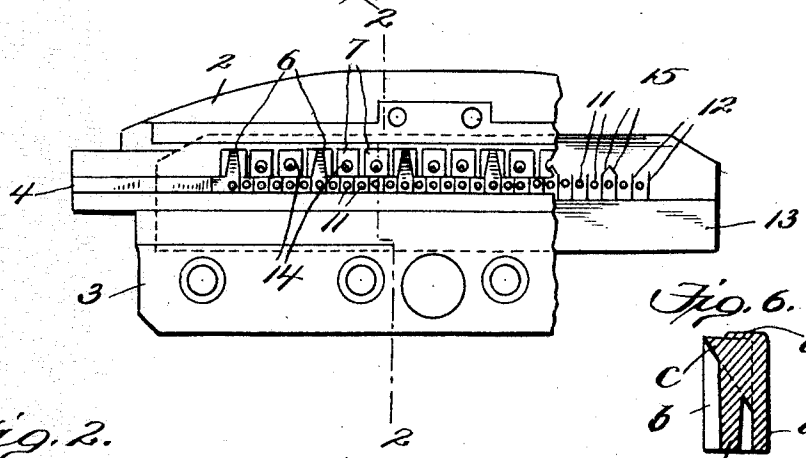

Fig. 6.

Fig. 2.

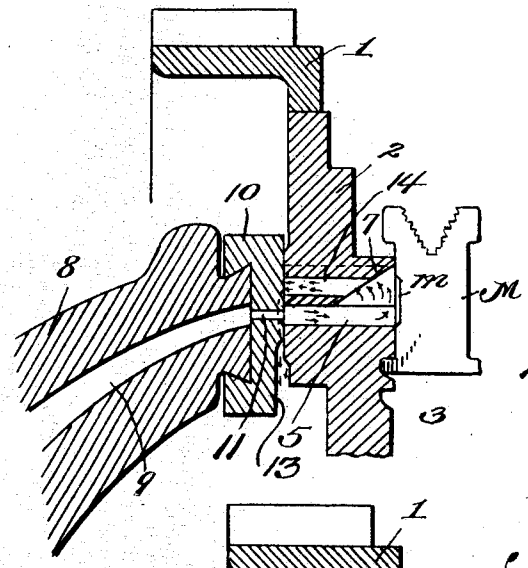

Fig. 3.

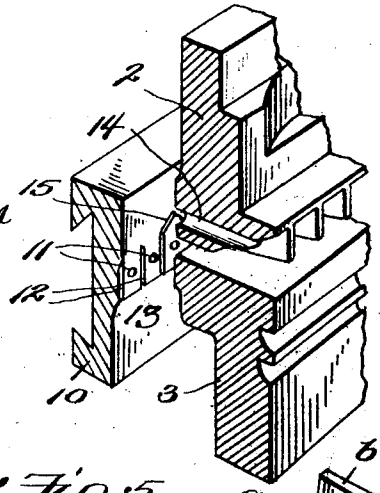

Fig. 4.

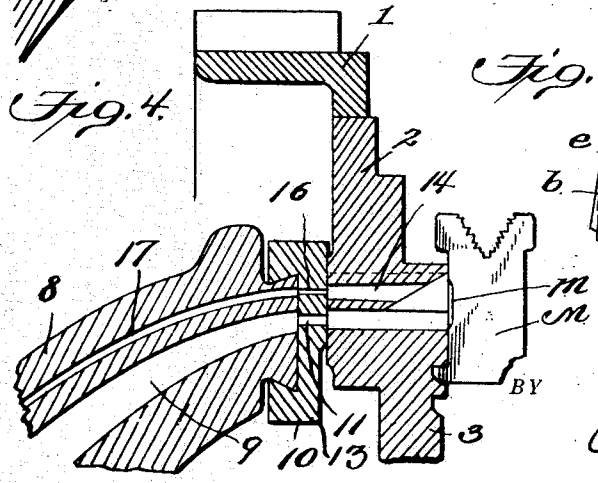

Fig. 5.

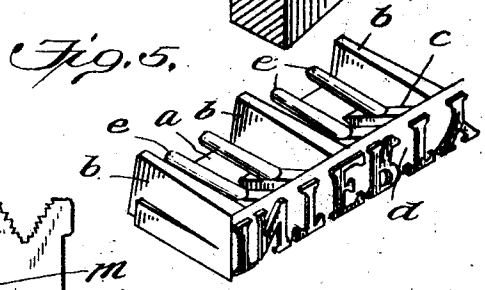

INVENTOR
Frank E. Barber
BY James L. Norris
ATTORNEY

Patented Dec. 18, 1928. 1,696,074

UNITED STATES PATENT OFFICE.

FRANK E. BARBER, OF BROOKLYN, NEW YORK, ASSIGNOR TO INTERTYPE CORPORATION, OF NEW YORK, N. Y., A CORPORATION OF NEW YORK.

CASTING MEANS FOR TYPOGRAPHICAL MACHINES.

Application filed March 10, 1928. Serial No. 260,769.

The present invention relates to improvements in typographical machines and more especially to those of the general class shown and described in Letters Patent No. 436,532 granted September 16, 1890 to O. Mergenthaler wherein character bearing matrices are assembled in a line and the justified line is presented to a mold while molten metal is injected from a metal pot into the mold cavity to cast a type bar or slug therein an edge of which bears a type face which contains reproductions of the characters borne by the matrices forming the line.

Developments of machines of this class have brought into use molds having recessed mold caps for the casting of type bars having enlarged type faces which overhang the bodies of the type bars, but experience has shown that there is a tendency for air to become trapped in the mold cavity and especially in the recesses thereof during injection of the molten type metal, with the result that the type metal does not entirely fill the mold cavity but leaves voids or air holes in the body of the type bar which is objectionable as it materially weakens it.

The primary object of the present invention is to provide a novel and improved casting means for machines of this class whereby complete venting of air from the mold cavity, especially in molds having recessed mold caps, is insured so that the mold cavity will be completely filled with type metal during each casting operation, and in consequence, the body of the type bar will be free of voids of air holes and hence will be of the desired strength.

A further object of the invention is to provide an improved type bar which utilizes the metal cast in passages through which air vents from the mold cavity as additional supporting elements or feet for the type bar, thus enabling the type bar to withstand the pressure exerted upon it incident to the making of printed or other impressions from the type bar.

To these and other ends, the invention consists in certain improvements and combinations and arrangements of parts all as will be hereinafter more fully described, the features of novelty being pointed out more particularly in the claims at the end of the specification.

In the accompanaying drawings:—

Fig. 1 is a front elevation of a portion of a mold of a typographical machine embodying the present invention, one end of the mold being broken away to show the mouthpiece of the metal pot adapted to cooperate with the improved mold;

Fig. 2 represents a section through the mold and the mouth-piece of the metal pot, on the line 2—2 of Fig. 1, a matrix line being shown in front of the mold;

Fig. 3 is a fragmentary perspective view of portions of the mold and the mouth-piece of the metal plot, showing the manner in which one of the vent passages in the mold communicates with the vent means in the metal pot mouth-piece;

Fig. 4 is a view similar to Fig. 2, showing a modified form of metal pot mouth-piece which may be used with the improved mold;

Fig. 5 is a perspective view of the improved type bar as cast in the improved mold; and

Fig. 6 represents a transverse section through the type bar shown in Fig. 5.

Similar parts are designated by the same reference characters in the several figures.

Casting means embodying the present invention may be used in typographical machines of the general class wherein type bars or slugs are cast from lines of matrices. In the present instance, the invention is shown applied to a typographical machine of the class shown and described in the patent hereinbefore referred to but adapted to use a mold of the kind having a recessed mold cap for the production of type bars the printing face of which is enlarged and overhangs the main body of the type bar. While the preferred embodiments of the invention are shown in the accompanying drawing and will be hereinafter described in detail, it is to be understood that the invention is not restricted to the precise constructions shown as equivalent constructions may be used and such will be included within the scope of the claims.

In the present instance, 1 represents a portion of the mold wheel of a typographical machine of the class hereinbefore referred to, 2 and 3 representating the cap and body respectively of a mold carried by the mold wheel and 4 represents one of the liners which space the cap from the mold body to conform with the size of type to be cast, it being understood that one of these liners is provided for each end of the mold. The mold as shown is of the type adapted to

cast a type bar having a relatively thin or small body and a relatively large or high printing face which overhangs the body, 5 designating the mold slot in which the relatively thin body *a* of the type bar is cast, 6 representing recesses which extend transversely in the lower face of the mold cap, from front to back and in which the ribs *b* which upstand from the body *a* are cast, and 7 designating recesses which are inclined from the front edge of the mold cap downwardly and rearwardly so that they merge into the mold cavity 5, the diagonal ribs *c* which extend from the enlarged printing face *d* of the type bar to the body *a* thereof and which assist the ribs *b* in supporting the overhanging printing face being cast in these recesses. It will be understood that the character bearing edges of the matrices M which are presented to the front or recessed side of the mold are formed with depressions *m* in which the printing face *d* of the type bar is cast.

8 represents the spout of a metal pot of the kind commonly used in machines of this class for injecting molten metal into the mold to cast the type bars therein, the metal pot usually containing a well which provides a supply of molten metal and a pump which forces molten metal received from the well through a throat 9 to a mouth-piece 10 which is adapted to move into close contact with the rear face of the mold to form a metal-tight joint therewith, the mouth-piece having a number of apertures 11 therein which receive the molten metal from the throat 9 and inject it into the mold cavity, these apertures communicating with the mold cavity at a level slightly above the top of the mold body. The mold-engaging face of the metal pot mouth-piece is formed with vertical grooves 12 between the metal injecting orifices to permit air normally contained in the upper portion of the throat 9 to escape from the orifices 11 downwardly to a space provided by the rearwardly off-set surface 13 toward the bottom of the metal pot mouth-piece when the metal rises in the throat under the action of the metal pot plunger.

When a line of matrices is presented to the front of a mold of the kind above described and having a recessed mold cap, and metal is injected into the mold from the metal pot the mouth-piece of which fits against the rear side of the mold, the molten metal entering the mold passes forwardly through the main portion 5 of the mold cavity, and upon reaching the matrix line which closes the front of the mold cavity, the metal flows upwardly into the recesses 6 and 7 in the mold cap, air from the cavity 5 and the recesses 6 escaping from the rear end of the mold, through the vertical grooves 12 in the metal pot mouth-piece but the remainder of the air, particularly that trapped in the inclined recesses 7 blocks the further entrance of the molten metal and thereby prevents filling of the entire mold cavity, especially the recesses 7 in which the ribs *c* of the type bar are cast, and in consequence, portions of the type bar, especially the ribs *c* which support the printing face will be incompletely cast or will contain air holes, thus materially weakening the type bar.

According to the present invention, this difficulty is avoided by forming the mold cap with passageways or vents 14 which extend from the recesses 7 rearwardly to the rear face of the mold, and providing vent passageways to communicate with the rear ends of the passages 14. The air passageways or vents 14 are located above the main cavity 5 of the mold where they are non-communicative with the rear or metal-receiving portion of said cavity and near the uppermost portions of the recesses 7 so that the molten metal upon reaching the front of the mold is free to flow upwardly to fill the depression *m* in which the type face is cast and to fill the recesses 6 and 7 and flow rearwardly through the air passageways or vents 14 to the rear face of the mold. The air vents from the mold cavity ahead of the inflowing metal without being blocked by or mixing with the metal flowing into the mold, due to the separation of the vents 14 from the rear or metal-receiving portion of the cavity 5 at the rear face of the mold, and the air thus vented from the mold may be discharged to the atmosphere through bridging grooves 15 which may be extended upwardly from the usual vent grooves 12 in the face of the mouth-piece, the bridging grooves 15 preferably connecting or joining at a point which will be in communication with the rear end of the respective passageway 14 in the mold when the mouth-piece is brought into casting position. The air which would otherwise be trapped in the recesses 7 is vented through the passageways 14 and thence to the atmosphere through the grooves 12 and 15, and the metal which fills the passageways 14 forms legs *e* which are integral continuations of the ribs *c* and they intervene the ribs *b*. In order to facilitate ejection of the slug from the mold, the passageways 14 in which the legs *e* are cast are tapered so that their diameter diminishes toward the rear end of the mold, the taper being sufficient to insure freeing of the legs *e* from the walls of the passageways 14 when the type bar is pushed forwardly to eject it from the mold.

Instead of venting the air from the passageways 14 in the mold through vent grooves in the mold-engaging face of the metal pot mouth-piece, the mouth-piece may be provided with a vent 16 to register with each passageway 14 in the mold when the mouth-piece is brought into casting position, and this vent may communicate with a vent passage 17 which may be extended through the

spout 9 of the metal pot to the metal containing well therein. In such case, air will be completely vented from the mold in front of the injected metal, thus insuring complete filling of the mold cavity and the recesses therein with molten metal, and any surplus metal which may be injected into the mold may return to the metal pot through the vents 16 and return passage 17.

The present invention insures complete venting of air from the mold cavity and especially from the recesses of a mold of the type used to cast type bars having skeleton-like bodies and overhanging type faces whereby complete casting of the entire type bar without voids or air holes is insured. The resulting type bars are of the requisite strength to withstand the pressure applied thereto incident to printing and other operations in which the type bars are used, and the type bars are afforded additional strength by the legs *e* which are cast as integral continuations of the type face supporting ribs *c*, these legs extending to the foot of the type bar and being trimmed off even with the foot of the type bar by the usual trimming knife, the type face intervening the ribs *b* being supported by the legs *e* which are adapted to rest on the same backing or support on which the remainder of the foot of the type bar rests when set up for printing or other use.

I claim as my invention:—

1. A mold for typographical machines having a cavity to receive metal and cast the body of a type bar therein, a recess to receive metal from said cavity, and a vent extending from said recess to the outside of the mold where it is non-communicative with the metal-receiving portion of said cavity.

2. A mold for typographical machines having a cavity for casting the body of a type bar, a recess adjacent to the front of the mold and connected to said cavity to receive metal therefrom, and a vent extending from said recess rearwardly to the rear face of the mold where it is non-communicative with said cavity.

3. A mold for typographical machines having a cavity for casting the body of a type bar, a recess above and communicating with the forward portion of said cavity, and a vent extending from said recess to the rear portion of the mold and non-communicative with the rear portion of said cavity.

4. A mold for typographical machines having a cavity open at the rear face of the mold to receive metal and adapted to cast the body of a type bar therein, a recess above said cavity and adjacent to the front face of the mold and in communication with said cavity, and a vent extending rearwardly from said recess to the rear face of the mold where it is non-communicative with the rear portion of said cavity.

5. A mold for typographical machines comprising a mold cap forming a main cavity for casting the body of a type bar therein and forming recesses at the upper front edge of said cavity, and vent passages extending rearwardly from said recesses to points on the rear face of the mold which are separated from said cavity.

6. In a typographical machine, the combination of a metal pot mouth-piece having metal injecting and air venting passages and a mold the rear face of which is adapted to form a joint with the face of said mouth-piece, said mold having a cavity to communicate with and receive metal from the metal injecting passage of the mouth-piece and having a vent passage separated from and non-communicative with the metal-receiving portion of said cavity to communicate with the air venting passage of the mouth-piece.

7. In a typographical machine, the combination of a metal pot mouth-piece having metal injecting and air venting passages located at different levels in its face, and a mold the rear face of which is adapted to fit against the face of the mouth-piece, the mold having a cavity which is open at the rear face of the mold at a level to communicate with the metal injecting passage of the mouth-piece and having an air venting passage leading from said cavity and open at the rear face of the mold at a level which separates it from and renders it non-communicative with said cavity at the rear face of the mold and brings it into communication with the air venting passage of the mouth-piece.

In testimony whereof I have hereunto set my hand.

FRANK E. BARBER.