Office de la Propriété Intellectuelle du Canada
Un organisme d'Industrie Canada

Canadian Intellectual Property Office
An agency of Industry Canada

CA 2170513 C 2008/02/19

(11)(21) 2 170 513

(12) BREVET CANADIEN
CANADIAN PATENT

(13) C

(86) Date de dépôt PCT/PCT Filing Date: 1994/09/08
(87) Date publication PCT/PCT Publication Date: 1995/03/16
(45) Date de délivrance/Issue Date: 2008/02/19
(85) Entrée phase nationale/National Entry: 1996/02/27
(86) N° demande PCT/PCT Application No.: US 1994/010081
(87) N° publication PCT/PCT Publication No.: 1995/007595
(30) Priorité/Priority: 1993/09/08 (US08/117,913)

(51) Cl.Int./Int.Cl. *H04Q 7/32* (2006.01)

(72) Inventeurs/Inventors:
LUBIN, MICHAEL L., US;
KUBASAK, KATHRYN A., US;
HEIN, GREGORY A., US;
MANDAVA, SURENDRA B., US;
POONPOL, CHANCHAI, US;
HEDAYAT, SHAHIN, US;
BURTIS, DONALD W., US;
KASMIR, SETON P., US

(73) Propriétaire/Owner:
PACIFIC COMMUNICATION SCIENCES, INC., US

(74) Agent: ARKIN, GARY

(54) Titre : TERMINAL DE COMMUNICATION ET DE TRANSMISSION DE DONNEES PORTATIF A MODES DE FONCTIONNEMENT MULTIPLES

(54) Title: A PORTABLE COMMUNICATIONS AND DATA TERMINAL HAVING MULTIPLE MODES OF OPERATION

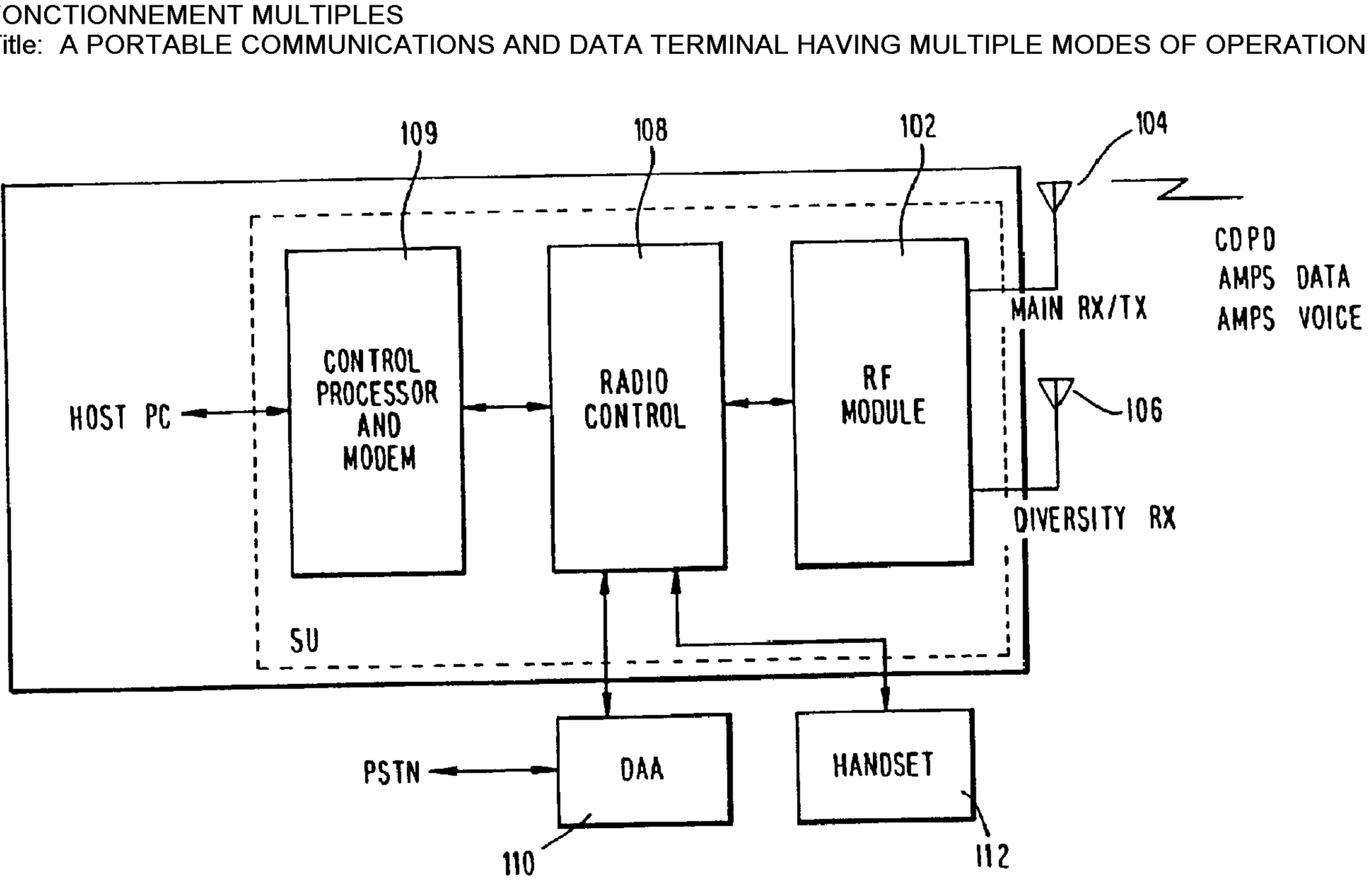

(57) Abrégé/Abstract:
A portable radio telephone handset includes the capability of operating as a data transfer terminal as well as an analog cellular telephone subscriber station. Two modes of operation are available in the handset, an analog cellular communication mode and a Cellular Digital Packet Data (CDPD) mode. A paging function for incoming analog cellular communication is carried out on a CDPD channel. The handset distinguishes between paging signals identifying CDPD mode communications and paging signals identifying analog cellular communications. The handset automatically preempts CDPD communications in favour of analog cellular communications such as those carried out in an AMPS configuration.

ABSTRACT

A portable radio telephone handset includes the capability of operating as a data transfer terminal as well as an analog cellular telephone subscriber station. Two modes of operation are available in the handset, an analog cellular communication mode and a Cellular Digital Packet Data (CDPD) mode. A paging function for incoming analog cellular communication is carried out on a CDPD channel. The handset distinguishes between paging signals identifying CDPD mode communications and paging signals identifying analog cellular communications. The handset automatically preempts CDPD communications in favour of analog cellular communications such as those carried out in an AMPS configuration.

A PORTABLE COMMUNICATIONS AND DATA TERMINAL HAVING MULTIPLE MODES OF OPERATION

Technical Field

This invention relates generally to wireless communication devices. More particularly, the invention relates to wireless portable phones supporting transmission and reception of data, fax, and voice signals.

Background of the Invention

Mobile wireless communication of analog voice signals was initially carried by half duplex radio systems. Citizens Band radio, one type of mobile wireless radio, uses amplitude modulation (AM) upon a carrier frequency to transmit or receive voice signals in a half duplex manner. Other mobile wireless radios used frequency modulation (FM) within a given carrier frequency range in order to transmit or receive voice signals, half duplex, achieving improved noise characteristics. These mobile wireless radios allowed a user to move within a given radius of antennas. A disadvantage to these systems was that once a user was beyond a certain range of a given base antenna, the radio channel for a given carrier frequency was inoperative. Another disadvantage was that wireless half duplex voice communication was unacceptable to most consumers. The consumer wanted a wireless duplex voice communication system similar to his or her wired home telephone.

In the 1980's, mobile wireless duplex voice communication was introduced into the marketplace by

using an analog FM based cellular radio. This analog cellular system for mobile wireless duplex voice transmission was called "Advanced Mobile Phone Service" (AMPS). Introduced by AT&T, the AMPS cellular network uses the FCC assigned carrier frequency range of 800 to 900 MHz. AMPS automobile cellular units were first permanently attached to the user's car. Automobile cellular units transmitted voice signals to a cellular base station within a given cell using one watt of power. Hand-held cellular units using battery power supplies were later introduced and transmitted voice signals to a cellular base station within a given cell using one quarter watt of transmit power. Because hand held cellular units operated from a battery power supply, the power consumed by the cellular phones became critical.

When a cellular phone is powered on and waiting to receive a phone call, it is in a stand-by mode consuming less power than in an active mode. However, when the hand held unit is in a stand-by mode, it constantly listens for its registration number in order to become active and receive a phone call. The stand-by mode, although lower in power than the active communication mode, continuously uses a considerable amount of power. It is desirable to further decrease the amount of power used in the stand-by mode in order to further increase the time the cellular unit requires for recharging or replacing batteries.

The human analog voice was the initial signal that the AMPS system was designed to communicate. The AMPS system was optimized for carrying as many analog voice signals within a given bandwidth of a channel as possible. Mobility of the cellular telephone using low power mobile units, FM modulation, and the higher carrier frequency range (800 MHz-900 MHz) is achieved through a cellular arrangement of antennas whereby a user's signal is handed off to the next cell site as he moves into a

different cell area. This cellular handoff can cause a temporary loss in transmission or reception. However, temporarily losing a voice signal is not critical because a user knows when there is a signal loss and can retransmit the voice information. However, signal loss, even though temporary, poses special problems for transmission of digital data. Some other AMPS mobile cellular problems causing a loss in a voice signal are fading signal strength, reflections, Rayleigh fading, and cellular dead spots.

The availability of portable computers naturally led to the desire to transmit digital data via wireless from a remote location. Presently, the AMPS voice cellular system is being used to transmit digital data in the form of Circuit Switched Cellular Data across AMPS carrier channels. Raw (baseband) digital data is converted so that it can be transmitted and received across the analog AMPS system. One disadvantage to using the AMPS system is that a narrow channel bandwidth and errors in transmission limits the baud rate of transmitting and receiving digital data. Another disadvantage of using AMPS to communicate digital data is that movement of the subscriber unit may cause a cellular handoff to occur, thus causing a loss of the digitally transmitted or received information. Loss of digital data may corrupt a data file such that it is useless. Other losses of the raw digital data may be caused by other problems of the AMPS mobile cellular system.

Another wireless communication device is a pager. Most pagers use simplex or one way communication receiving only a limited amount of information such as a telephone number. Most pagers only display information to a user on demand and perform no other function. Because only one way communication is required, an acknowledgement is not returned by the pager to the original sender. In many cases it is desirable that a

sending party receive an acknowledgement minimally, telling him that his page message was received. In some cases it may be appropriate to respond by leaving a return page message. A disadvantage of present paging systems is that acknowledgment and return pages are not widely available because simplex paging is more commercialized than other paging modes. Another disadvantage of present pagers is that a displayed telephone number is not automatically and electronically dialed directly on a telephone. A user reads the telephone number from a pager's display and manually dials the number on a telephone in order to contact the paging party. It is desirable that a wireless pager have the capability of automatically dialing a received telephone number on a wireless cellular telephone via electronic means, thus integrating the features of a wireless cellular telephone with that of a duplex pager.

A wired product that is presently popular is high speed fax-modems. Fax-modem hardware and firmware in conjunction with fax and data communication application software have the capability of sending digital data over various modem protocols as well as sending facsimile data by using the various facsimile protocols. Fax or data communication application software may operate on different hardware such as home or portable computer, personal communicator, personal digital assistant, or other electronic devices. Examples of modem protocols for standard modulated data are CCITT V. 22bis, CCITT V. 23, CCITT V.32, Bell103, and Bell212A. Modem protocols that include error control include CCITT V.42, MNP2, MNP3, MNP4, and MNP10. Modem protocols that provide data compression are CCITT V. 42bis and MNP5. Facsimile protocols include CCITT V.21, CCITT V.27ter, CCITT V.29, CCITT T.4, CCITT T.30, CCITT T.35, Class I-EIA/TIA 578, Class I-EIA 592, and Class II-EIA 578-SP2188. A fax-modem accepts raw (baseband) digital data from an

electronic device over an internal data bus or external RS-232 port. Raw digital data is converted and modulated into data of a given protocol for transmission onto a standard telephone line. Data received from the telephone line can be converted from the modulated form into raw digital data that can be interpreted by the hardware, firmware and application software.

A disadvantage of present fax-modems is that most require a wire connection to a telephone line. Present methods of providing wireless capability for a fax-modem take the modulated analog modem output signal from a fax-modem and input this into an AMPS conversion unit. The AMPS conversion unit converts and modulates the transmitted analog modem output signal into a different analog form for transmission onto the AMPS network The analog modem output signal is converted into what is called Circuit Switched Cellular Data. Received AMPS signals can be converted from Circuit Switched Cellular Data by the AMPS conversion unit into analog modem input signals that the fax-modem can receive. Presently, fax-modems do not directly convert and modulate raw digital data into an analog signal for transmission onto the AMPS cellular network. A disadvantage to present methods of providing wireless fax-modem capability is that it requires additional devices to send or receive fax and digital data over the AMPS cellular network. Another disadvantage is that more power is necessary for additional components, such as the AMPS conversion unit. Another disadvantage is that a user must carry the portable computer, fax-modem, and AMPS conversion unit to provide wireless fax-modem capability. It is desirable to incorporate a fax-modem and AMPS conversion unit into one unit providing the capability of sending Circuit Switched Cellular Data across the AMPS network.

A disadvantage to using Circuit Switched Cellular Data communication across AMPS is that it requires that

the mobile unit be stationary to avoid losing data from fading or cellular handoff associated with a non-stationary mobile AMPS communication. Thus, a mobile unit should avoid being moved even slightly when performing communication of Circuit Switched Cellular Data using the AMPS network.

Heretofore, providing efficient wireless transmission of both voice and data signals into one small hand held integrated package has been difficult. Furthermore, it is difficult to integrate the features of AMPS voice transmission with applications such as data transmission, electronic mail, duplex paging and provide a Circuit Switched Cellular Data interface such as a wireless fax-modem into a single hand held battery operated wireless unit. Further, the integration of these features into a single hand held unit has not been possible because of the unavailability of the underlying electronic components and application software required to integrate all these features into a single hand held unit. It is desirable to integrate AMPS voice communication and a data communication mode when moving between cell sites, as well as providing the capability of providing Circuit Switched Cellular Data Communication into one integrated hand-held unit.

Brief Summary of the Invention

In its preferred aspects, some of the objects of the present invention include the following:

To combine the capabilities of a voice cellular telephone, pager, and wireless fax-modem into one integrated battery operated hand held unit;

To reduce the standby power consumption of a cellular telephone such that continuous operating capacity of the battery of a cellular telephone is increased;

To achieve mobility in the transmission of digital and facsimile information without incurring errors;

To integrate a paging system into an analog cellular telephone system;

To facilitate automatic call-back on a mobile communication terminal in an analog cellular telephone system in response to a paging signal;

To combine the capabilities of wireless communication using analog voice signals and CDPD data while providing a host interface for wireless communication using Circuit Switched Cellular Data or CDPD Data, all arranged in one integrated battery operated hand held unit;

To provide AMPS system imaging over a CDPD channel and then automatically dialing the received paged telephone number using the AMPS network so that a paged user can communicate with the paging party;

To be able to automatically switch from communications on the CDPD network into communications using the AMPS network; and

To provide expansion capability for future CDPD applications that can operate from a hand held integrated unit.

According to the present invention then, there is provided a portable radio telephone handset, comprising means for controlling operation in an analog cellular mode of communication said means for controlling operation of said analog cellular mode of communication comprises Advanced Mobile Phone Service (AMPS) circuitry; means for controlling operation of a cellular digital packet data (CDPD) mode of communication; and means for selecting operation of one or the other of said means for controlling responsive to a difference in received paging signals directed to said analog cellular mode of communication and paging signals directed to said CDPD mode of communication.

According to a further aspect of the present invention, there is also provided a portable communication terminal comprising a radio frequency transceiver switchably operable in either an analog cellular mode or a cellular digital packet data (CDPD) mode; processor means for controlling operation of said transceiver in both said analog cellular mode and said

CDPD mode and for maintaining operation only in said CDPD mode until said processor receives an indication of Advanced Mobile Phone Services (AMPS) operation indicating operation in said analog cellular mode from said radio frequency transceiver; expansion means for adding functions to aid processor means; and a telephone handset coupled to said transceiver.

According to yet another aspect of the present invention, there is provided in a portable data communication terminal including a radio telephone handset, a controller comprising a pair of microprocessor integrated circuit chips comprising means for concurrently sharing control functions of said data terminal, each of said microprocessor integrated circuit chips comprising means for concurrently switching operation of said communication terminal between a Cellular Digital Packet Data (CDPD) mode and an analog cellular voice mode based on at least one of radio frequency communication being received by said data terminal or radio frequency communication being transmitted by said data terminal, wherein said analog cellular voice mode comprises Advance Mobile Phone Service (AMPS).

According to yet a further aspect of the present invention, there is provided a portable communication terminal comprising a cellular telephone handset operable in a cellular digital packet data (CDPD) mode and an Advanced Mobile Phone Service (AMPS) mode; and a controller arranged to select one of said two modes for handset operation, wherein said controller controls said handset to receive all incoming paging signals for both CDPD and AMPS operation on a channel designated for CDPD operation, said controller comprising means to control said handset to respond to an incoming paging signal with an acknowledgement signal in the AMPS mode.

According to yet another aspect of the present invention, there is provided a telephone handset that communicates with analog cellular signals and with cellular digital packet data (CDPD) signals over frequency channels, comprising analog

signals; CDPD signal circuitry that transceivers CDPD signals; a discriminating circuit that discriminates between analog cellular signals and CDPD signals; and a control processor, coupled to the discriminating circuit, that controls the analog cellular signal circuitry and the CDPD signal circuitry such that the CDPD signals are transceived over the same frequency channels as the analog cellular signals, wherein the analog cellular signal circuitry and the CDPD signal circuitry are operatively coupled to a single, common radio frequency transceiver, wherein the radio frequency transceiver is responsive to the control processor, and wherein the discriminating circuit is responsive to a difference in paging signals that contain information about analog cellular signals and paging signals that contain information about CDPD signals to cause the control processor to switch between the analog cellular signal circuitry and the CDPD signal circuitry.

According to yet a further aspect of the present invention, there is provided a telephone handset that communicates with analog cellular signals and with cellular digital packet data (CDPD) signals over frequency channels, comprising analog cellular signal circuitry that transceivers analog cellular signals; CDPD signal circuitry that transceivers CDPD signals; a discriminating circuit that discriminates between analog cellular signals and CDPD signals; a control processor, coupled to the discriminating circuit, that controls the analog cellular signal circuitry and the CDPD signal circuitry such that the CDPD signals are transceived over the same frequency channels as the analog cellular signals, and further comprising a scratch pad memory connected to the control processor, the scratch pad memory comprising a static random access memory providing scratch pad input to the control processor.

Brief Description of Drawings

Fig. 1 is a block diagram of a portable radio telephone handset in relation to other external system elements.

Fig. 2 is a representation of the operating modes available to the handset of the present invention when used in the appropriate cellular telephone system.

Fig. 3 is a block diagram illustrating discrete hardware components being included in the portable radio telephone handset.

Detailed Description of the Preferred Embodiments

One solution to the aforementioned difficulties of integrating portable voice and data communications

resides in a new digital wireless communication technology developed to overcome some of the undesirable effects of transmitting raw digital data over the AMPS system. This new digital wireless communication system and network is called Cellular Digital Packet Data (CDPD). The CDPD communication system shares the same carrier frequencies assigned to the AMPS channels as indicated in Appendix I, and adheres to the standards specified in Appendix VII. A base unit, mobile data base station (MDBS), of the CDPD system utilizes an unused channel within an AMPS cell to establish a link and communicate to a user's mobile end system. The mobile end system is a portable computer or other portable electronic device containing a subscriber unit. An MDBS then communicates from the user across a service provider's network of wire lines, microwave links, satellite links, AMPS cellular links, or other CDPD links in order to transmit data to another mobile end system, computer network, or other non-mobile electronic system. Within a cell area the MDBS first performs "RF sniffing" in order to detect an unused AMPS channel. CDPD use of an AMPS channel is limited to the idle time between AMPS channel access. If an AMPS cellular unit begins transmitting on a channel occupied by CDPD, the CDPD unit ceases transmitting on that channel and waits until the same channel becomes available or switches, referred to as channel hopping, to a different available channel.

Within the CDPD network, digital data is burst mode transmitted between a given subscriber unit (SU) within a mobile system and a mobile data base station (MDBS) using Gaussian Minimum Shift Keying (GMSK) modulation. Communicating in a burst mode fashion reduces the time that an SU communicates with an MDBS such that other SUs can talk with the same MDBS. For a given data size, the CDPD connect time is reduced considerably when compared to sending digital data over the AMPS network. Presently

the raw (baseband) digital data envisioned being transferred across CDPD are electronic mail messages, digital fax data, or digital data representing a network connection such that files may be transferred as if currently connected to a local area network. Other CDPD applications are being developed such as CDPD duplex paging.

The CDPD subscriber unit was designed to be inserted into a given computer displacing the floppy disk drive. The subscriber unit interfaces to the computer's internal data bus such that data can be transmitted or received across the CDPD network. In this manner electronic mail, electronic faxes, and data files can be sent without use of a landline system. However, it may be not economical to transfer large digital data files using the wireless CDPD network. In this case using a standard data modem connected to the wired telephone system may be preferred.

A disadvantage of present portable computers is that many are still too large and heavy for continuous use by a majority of consumers, especially with cellular handsets. Furthermore, many consumers do not require the computing power contained in a portable computer nor desire to pay for such expense just to utilize the CDPD network. However, the consumer may still desire to send a limited amount of digital information through a wireless system such as the CDPD network. In other cases it may be desirable to share a subscriber unit amongst company employees such that only the employee on travel requires the subscriber unit.

Interchanging a CDPD subscriber unit from one persons portable computer to another's portable computer is difficult. It is preferable that a user be able to easily interface a portable computer or other electronic device to a form of CDPD subscriber unit for communication across the CDPD network.

Integration of cellular voice communication and data communication is facilitated by the device of Fig. 1 illustrating a block diagram of the portable communication terminal handset 100 of the present invention. In most respects this portable communication terminal is similar to conventional portable radio telephone handsets in that it includes a radio frequency module 102 having at least one radio frequency transceiver. The radio frequency transceiver uses a main antenna 104 for both receiving and transmitting the various types of signals handled by the portable terminal, such as Advanced Mobile Phone System (AMPS) data (circuit switched cellular data) communication, AMPS voice communication and CDPD communication. A diversity antenna 106 is used as a backup to maintain reception under certain adverse conditions. A telephone type handset 112 is used to facilitate AMPS voice communication.

The portable terminal can also be patched into a local public switch telephone network (PSTN) by way of a digital-analog access interface (DAA) connected to the radio control processor 108. This processor along with control processor and modem 109 divides the various control functions of the portable terminal including call setup, high level protocol, low level protocol, power adjustment, modem operation and data transfer between an external host computer. To facilitate ease of subscriber use, the host computer can be a personal computer (PC) or personal digital assistant (PDA) or other electronic device. The connection hardware of the portable terminal is of a standard type normally used with PC external connectors.

One key difference between the portable terminal of the present invention and conventional cellular handsets and data terminals is the capability of the two processors 108, 109 to control the RF module for

communication in both the AMPS mode and the CDPD mode. The RF module 102 is both automatically and manually controlled to operate either in the CDPD mode or the AMPS mode in a manner consistent with the interrelation between the AMPS system and the CDPD system, as indicated in Appendices I and VII.

The CDPD network is designed to operate as an extension of existing data communications networks. A CDPD network shares the transmission facilities of existing analog cellular telephone networks, such as an AMPS network. The CDPD mobile data base station (MDBS) equipment is located at a cellular carrier's cell site and is integrated with existing AMPS base station cellular equipment. CDPD provides a non-intrusive packet-switched data service that shares frequency channels with AMPS networks without impacting on AMPS service. This is done via the end-user subscribers (analogous to the mobile subscribers in a cellular system). The packetized nature of the data transmission from the mobile subscribers allows many CDPD users to share a common channel, accessing the channel only when they have data to send and otherwise leaving it available to other CDPD users. For users whose data transmission requirements are characterized by numerous transmissions of short to medium duration, CDPD is a far more effective mode of communication than circuit switched cellular data modems. CDPD has been adopted as a national standard by the cellular industry and adheres to the standards contained in the publications of Appendix II of this application.

In comparison to AMPS to which the CDPD system is appended, the infrastructure requirements of the CDPD system are very small. The multiple access nature of the system makes it possible to provide substantial CDPD coverage to many users simultaneously with the installation of only one CDPD radio in a given sector.

Unlike AMPS, which uses in-band FSK signaling to establish call connections and out-of-band (control channel) signals to control the mobility, CDPD uses a sophisticated set of in-band protocols to control channel access and mobility and to manage the transfer of data throughout the CDPD network. These are discussed in greater detail in Appendix I which also illustrates the relationship between a host AMPS and an appended CDPD network.

Although the CDPD system shares existing AMPS radio frequency channels, AMPS calls are given first priority, and they are always able to preempt the use of any channel being used by CDPD. However, this protocol is not absolute and a cellular service provider may decide to dedicate one or more channels to CDPD use. In such a case, AMPS calls will not preempt the channel(s) occupied by CDPD signaling. In order to assign priority to predetermine type of signal, signal discrimination is necessary. In a mobile data base station (MDBS) employing CDPD, the most common technique includes "RF sniffing" to detect the presence or absence of AMPS activity on any given channel. In some systems, the base station can be given channel information directly by the AMPS equipment via a data interface. If the sniffer finds that a channel is not in use, the MDBS may establish a CDPD network on a particular channel by transmitting on a forward link. The mobile end user will acquire the forward link, register, and then begin to transmit packets on return channels according to a digital sense multiple access (DSMA) scheme in which the mobile end user accesses the channel only when they have data to send. Thus, CDPD network keeps track of the channels in use while the AMPS does not.

The present invention operates to allow the mobile subscriber to receive CDPD communication originated by other parties by providing discrimination between paging

signals containing information regarding CDPD communication and paging signals containing information regarding AMPS communication. This discrimination is carried out by a controller including the IC microprocessor chips which maintain the cellular handset or portable data terminal in the CDPD mode until AMPS communication is requested. The power expenditure in this mode is considerably lower than that in the AMPS mode.

In the CDPD mode, a cellular handset operates as a fully functional CDPD mobile terminal. In order to participate in the CDPD network, the handset communicates with a Mobile Data Base Station (MDBS) using GMSK modulation on AMPS radio frequencies and occupying one AMPS channel. According to the present invention, the radio telephone handset will monitor received signal strength. Based upon the detected values, the handset will locate the strongest CDPD channel and register on that channel in the local cell. The handset will also locate and switch to a new CDPD channel whenever the local MDBS switches channels. The CDPD system will support hand-off to an adjacent cell if the portable radio telephone handset travels and receives signal level changes.

By using the CDPD mode as described above, the handset of the present invention has the capability of sending data messages such as electronic mail input by a handset key pad to other users in the CDPD network. The handset can also be used to transport data (via electronic mail/page/FAX/file) to and from the host computer via an appropriate I/O port and the CDPD network. Since the handoff sequence in the CDPD mode mitigates against data loss, as indicated in Appendix VII, successful data transfer can take place even when the mobile data terminal handset is moving from the cell site to another. While in the CDPD mode, the handset is

able to conserve battery power by remaining in a dormant or "sleep" protocol when data is not being sent or received.

The data terminal handset will de-register from the CDPD network when another mode is selected either by the user or as established by predetermined protocol. De-registration normally occurs when the user chooses to initiate an AMPS data or voice communication. De-registration also occurs when a paging signal indicative of AMPS communication is received by the portable handset. The user of the handset can also choose to initiate data transmission over the CDPD system even after de-registration has occurred due to AMPS communication. In this case, it is only necessary for the user of the handset to begin communication after the AMPS communication has ended since re-registration would have occurred as soon as the non-CDPD communication had ended.

The portable data terminal handset as configured according to the specifications found at pages 10-12 of Appendix V, permits all the modes of operation illustrated in Fig. 2, for which the handset has capability. Circle 200 in Fig. 2 represents the menu mode selection by either the operator or programmer of the portable data terminal handset. Either of the two modes (AMPS or CDPD) can be selected by an operator using either the key pad on the handset 112 (Fig. 1) or an additional key pad used to import data into the system. If data is being entered into the portable terminal (handset) 100 by a host computer, either the mode or the predetermined default setting can be selected as part of that data transfer.

For best results, the present system is normally in a low-power "sleep" mode as indicated at circle 202. This "sleep" or dormant mode results in the least amount of power expenditure. Normally, the "sleep" mode will be

interrupted every 10-255 seconds to check for messages such as incoming paging signals. If none are received, the CDPD mode remains idle as indicated at circle 204. The CDPD can be rendered active as indicated at circle 206 by the receipt of a paging signal, a command from the host computer or the handset user to initiate data transfer in the CDPD mode. The advantage of remaining in the CDPD mode is that the battery is not heavily burdened so that talk time at full transmission power is greater than one hour and standby time while monitoring the AMPS control channel is greater than 12 hours.

All paging is conducted on CDPD channels, but can convey data of an incoming AMPS communication as well as an incoming CDPD communication. If a paging signal indicating an incoming AMPS communication is received, the CDPD mode is interrupted (even if CDPD communication is being conducted at that moment), and one of the two AMPS modes (voice 210 and data 214) is activated. The user or a program from the host computer can select whether an AMPS voice call will preempt AMPS data communication. Depending upon the services the cellular telephone network and its associated land line network will support, different treatment can be given to different incoming calls depending upon the identification of the caller. For example, caller ID, call screening or an automatic call-back can be carried out with the portable data terminal/handset of the present invention.

Normally the handset will remain in the AMPS mode until all AMPS communication has ended. If instructions are not received to remain in the AMPS mode as indicated at circle 212, the handset will return to the dormant mode 202 and carry out the intermittent detection for paging signals in the CDPD mode.

The aforementioned special services such as caller ID and automatic call-back are carried out in the AMPS

mode using the FSK control channel including BCH and Manchester encoding, framing, FSK modulation and amplification. FSK reception includes signal recovery (preferably using frequency discrimination), timing recovery, framing recovery, Manchester decoding and BCH decoding. To do this, the handset estimates received signal level, processing audio signals for FM modulation and recovering audio signals after FM demodulation. Audio processing includes the audio filtering, companding, pre-emphasis, deviation limiting, FM modulation, and amplification. The handset also generates SAT and ST signals and combines them with the processed audio signals before the FM modulation period. The receiver portion of the handset includes FM discrimination, de-emphasis, expanding, audio filtering, and amplification. Noise muting is preferably included in receiver processing. The receiver portion also detects an SAT tone and switches to voice mode following detection of a dotting sequence. The handset is capable of recovering data and audio information well in a high noise/high interference environment. The portion of the portable terminal carrying out AMPS communication complies with the standards and specifications enumerated on pages 12-14 of Appendix V. The AMPS mode will also support other communication techniques such as circuit switched cellular communication to effect a cellular modem. Using this technique, the handset of the present invention supports transmission of data and facsimile over the AMPS voice channel using modulation, facsimile, control and data compression standards as listed on page 6 of Appendix V. Using a connection to a public switch telephone network (PSTN), the portable radio telephone handset can support voice, modem and facsimile communication over an associated landline network. The standards for circuit-switched data over the PSTN are found on page 21 of Appendix VI. Modem and facsimile

specifications for PSTN operation are found in Appendix III.

Another advantage of the present invention is the use of a common radio module 301 (in Fig. 3) and common processing means, constituted by control processor 302 and Merlin ASIC processing chip 303 for carrying out the functions of both the AMPS and CDPD communication modes. The processor chips 302, 303 are fully described in Appendix IV and divide the control functions of the portable terminal to effect the conversion between the AMPS communication mode and the CDPD communication mode. An application expansion port 304 feeds the data link 305 between the two processor chips 302, 303 in order to allow additional applications to be carried out by the processor chip pair by virtue of additional programmed chips.

The two processor chips 302, 303 are also meant to receive data and programming instructions from an external computer through RS-562 interface 306. For ease of operation, this external computer is preferably a personal computer (PC). An internal modem (not shown) can be included as part of the function of the two processor chips 302, 303. Preferably, the computer connected through interface 306 would be a portable device such as a portable digital assistant (PDA) so as to maintain the mobility of the overall data communication terminal handset.

Processor chip 303 controls the phase lock loop of radio module 301 through data line 310. Conversion of analog signals from radio module 301 into digital signals appropriate for processor chip 303 is carried out by analog-digital and digital-analog interface 308. The converted signals are carried between interface 308 and processor chip 303 by way of data trunk 312. In order to carry out the function of signal discrimination and monitor the power supply module 318 for proper power

level, a voltage detector 316 provides an output to processor chip 303.

Power supply module 318 is preferably fed by a six volt battery 326. The power supply module 318 provides a number of different power levels commensurate with the type of operation carried out by the portable data terminal 100.

The overall power drain is most affected by radio module 301 which preferably contains at least one radio frequency transceiver. Normally this transceiver would operate in a frequency range of 824.040-848.970 MHz at a maximum power output of .6 watt. Further radio frequency standards are listed on page 11 of Appendix VI, and coincide with the radio frequency standards of the MDBS described in Appendix I and the CDPD system description of Appendix VII. Radio module 301 has a diversity antenna arrangement including transmit/receive antenna 330 and receive antenna 331. This arrangement is used for a switchover when multipathing occurs in order to maintain the quality of the reception to radio module 301. From the signals received by radio module 301, RSSI (signal strength) data is derived and processed in interface 308 and processor chip 303. The RSSI data is displayed on the handset display 320 at least four times per second when the RSSI signal is routed to the display by means of analog switch 314.

As previously indicated, the control function of the portable data terminal is divided between processor chips 302 and 303. Chip 303 handles the power-down process occurring when the handset goes into the dormant "sleep" mode. Chip 303 also handles lower level protocol for most functions handled by both of the processor chips. Modem communication over an AMPS channel is also controlled by chip 303. Voice communication is effected using speaker 334 and microphone 335 connected to audio codec 336, which in turn is connected to processor chip

303 to receive the appropriate signals for audio communication. Audio codec 336 is activated by switch 337 when appropriate signals are received from processor chip 303.

Processor chip 302 handles call set up as well as high level CDPD protocol. DMA and UART functions are also handled by processor chip 302. Data is input by the user into the system by means of a 4 X 7 key pad 340. Preferably, all switches of the key pad 340 are a single pull, single throw switches with momentary contact. The key pad is usually provided with backlighting for user convenience.

The user is provided with a "scratch pad" constituted by static ram 324. A control switch 322 constituted by an EPROM is also provided for user convenience. When a paging signal is received by the handset, the user can be advised by means of vibrator 350 or buzzer 351, both connected to processor chip 302. Additional memory capacity can be provided to the coupled processor chips 302, 303 by means of either RAM 360 or EEPROM 361.

Host connector 370 is used to transfer audio frequency and radio frequency signals from the handset to a host cellular terminal such as would be found in an automobile. By placing the handset in an appropriate cradle included with the host terminal, it is possible for the handset to be used in "hands-free" operation if the host terminal supports this function. The pin arrangement of host connector 370 is specified on pages 16-23 of Appendix VI. An additional telephone type handset can be connected to the portable data terminal through host connector 370.

The portable data terminal/handset of the present invention can be arranged in a number of different types of casings and a number of kinds of configurations. For example, the handset can be attached to the casing of

portable PC such as a PDA. The two casings can be configured so that the two devices remain portable either separately or attached to each other. In another configuration, the portable/handset can be attached to a non-portable PC, serving as a communications terminal for that PC. In a third configuration, the portable terminal/handset can be used in a stand-alone arrangement, easily carried in a briefcase or about the person of a subscriber. This configuration can also be used with a mobile station in an automobile.

A major advantage of the present invention is that in its use of a CDPD mode for transmitting data, data can be transferred in a substantially uninterrupted manner even when the moving portable terminal/handset moves from one cell site area to another. Although some interruption may take place, normal redundancy protocols supply the data which otherwise would have been lost. Since the CDPD channels support digital data transfer, digital encryption techniques (as referred to in Appendix VII) can be employed to maintain data security. Thus cellular communications can be rendered secure in a way not possible with a normal AMPS system.

Although a number of arrangements of the present invention have been mentioned by way of example, it is not intended that the invention be limited thereto. For example, the present invention can be adapted with the appropriate use of its expansion ports and connection to systems having the appropriate characteristics to support electronic mail, a modem emulation mode, TCP-IP connections, call screening, automatic paging acknowledgement including messaging, and location functions. Accordingly, this invention should be considered to include any and all configurations, modifications, variations, combinations or equivalent arrangements following within the scope of the following claims.

THE EMBODIMENTS OF THE INVENTION IN WHICH AN EXCLUSIVE PROPERTY OR PRIVILEGE IS CLAIMED ARE DEFINED AS FOLLOWS:

1. A portable radio telephone handset, comprising:

means for controlling operation in an analog cellular mode of communication said means for controlling operation of said analog cellular mode of communication comprises Advanced Mobile Phone Service (AMPS) circuitry;

means for controlling operation of a cellular digital packet data (CDPD) mode of communication; and

means for selecting operation of one or the other of said means for controlling responsive to a difference in received paging signals directed to said analog cellular mode of communication and paging signals directed to said CDPD mode of communication.

2. The handset of claim 1, wherein said means for controlling operation in said analog cellular voice mode of communication and said means for controlling operation of said CDPD mode of communication are arranged in a common portable housing.

3. The handset of claim 2, further comprising processor means for commonly controlling operation of both said analog cellular mode of communication and said CDPD mode of communication.

4. The handset of claim 3, wherein said means for controlling operation of said analog cellular mode of communication and said means for controlling operation of said CDPD mode of communication comprise common radio frequency transceiver circuitry.

5. The handset of claim 4, wherein said transceiver circuitry includes switch-over means for compensating for multipath conditions.

6. The handset of claim 5, wherein said switch-over means comprise a diversity receiving antenna and a shared transmitting/receiving antenna.

7. The handset of claim 3, wherein said processor means comprises means for detecting a paging signal in the CDPD mode.

8. The handset of claim 7, wherein said means for detecting comprise means for operating in a periodic manner.

9. The handset of claim 3, wherein said processor means further comprise means for distinguishing a paging signal relating to the CDPD mode from a paging signal relating to an analog cellular mode.

10. The handset of any one of claims 1 to 9, further comprising interface means for connecting said handset to an external computer.

11. The handset of claim 7, further comprising a display comprising means for indicating characteristics of a paging signal provided by said means for detecting.

12. The handset of any one of claims 1 to 11, further comprising means for enabling voice communication, and a telephone keypad.

13. The handset of claim 3, further comprising means for enabling facsimile transmission in the analog cellular mode, and means for inputting facsimile data into said handset, said processor means controlling said facsimile data inputting means and said facsimile transmission means.

14. The handset of claim 11, further comprising means for indicating receipt of a paging signal.

15. The handset of claim 14, wherein said means for indicating comprise a vibrator.

16. The handset of claim 14, wherein said means for indicating comprises an audible alarm.

17. The handset of claim 9, wherein said processor means further comprises means for determining identity data contained in a paging signal.

18. The handset of claim 17, wherein said processor means further comprises means for discriminating said detected identification and providing control signals responsive to said discrimination of an ID number.

19. The handset of claim 18, further comprising power supply means for adjusting the operating power level of said processor means responsive to said control signals.

20. The handset of claim 17, further comprising means for interrupting communication in the CDPD mode in response to detection of a paging signal indicative of operation in said analog cellular mode.

21. The handset of claim 18, further comprising means for carrying out an automatic all back responsive to said control signals.

22. The handset of claim 12, further comprising means for interfacing with a host terminal whereby hands-free operation of said handset is carried out using said handset and said host terminal.

23. A portable communication terminal comprising:

a radio frequency transceiver switchably operable in either an analog cellular mode or a cellular digital packet data (CDPD) mode;

processor means for controlling operation of said transceiver in both said analog cellular mode and said CDPD mode and for maintaining operation only in said CDPD mode until said processor receives an indication of Advanced Mobile Phone Services (AMPS) operation indicating operation in said analog cellular mode from said radio frequency transceiver;

expansion means for adding functions to aid processor means; and

a telephone handset coupled to said transceiver.

24. The portable communication terminal of claim 23, further comprising a first interface to an external host computer.

25. The portable communication terminal of claim 24, further comprising a second interface for connection to a host terminal.

26. The portable communication terminal of claim 25, wherein said host terminal comprises a cellular telephone station having a power supply module connected to said portable communication terminal through said second interface.

27. The portable communication terminal of claim 23, wherein said processor means comprise two control processor chips.

28. The portable communication terminal of claim 27, wherein said power supply module is energized by a battery.

29. The portable communication terminal of claim 27, wherein said telephone handset comprises an audio codec connected to one of said processor chips.

30. The portable communication terminal of claim 23, wherein said radio frequency transceiver, processor means and telephone handset are contained within a common portable housing.

31. The portable communication terminal of claim 23, further comprising a keypad separate from said telephone handset.

32. The portable communication terminal of claim 27, further comprising an analog-digital-analog interface chip connected between said radio frequency transceiver and one of said control processor chips.

33. The portable communication terminal of claim 23, further comprising a display.

34. The portable communication terminal of claim 23, further comprising a vibrator activated by a paging signal.

35. The portable communication terminal of claim 23, further comprising an audible alarm, activated in response to a paging signal.

36. The portable communication terminal of claim 23, wherein said radio frequency transceiver includes switch-over means for compensating for multipath conditions.

37. The portable communication terminal of claim 36, wherein said switch-over means comprise a diversity receiving antenna and a shared transmitting receiving antenna.

38. The portable communication terminal of claim 26, further comprising a static RAM memory dedicated for use as a scratch pad input to said processor means.

39. A portable communication terminal of claim 23, wherein said processor means is arranged to assign priority to communications in the analog cellular mode over communications in the CDPD mode.

40. The portable communication terminal of claim 23, further comprising a modem and circuitry for data communication operated in conjunction with said external host computer.

41. The portable communication terminal of claim 40 wherein said data communication comprises facsimile communication.

42. The portable communication terminal of claim 24, wherein said external host computer is a portable digital assistant (PDA).

43. In a portable data communication terminal including a radio telephone handset, a controller comprising:

a pair of microprocessor integrated circuit chips comprising means for concurrently sharing control functions of said data terminal, each of said microprocessor integrated circuit chips comprising means for concurrently switching operation of said communication terminal between a Cellular Digital Packet Data (CDPD) mode and an analog cellular voice mode based on at least one of radio frequency communication being received by said data terminal or radio frequency communication being transmitted by said data terminal, wherein said analog cellular voice mode comprises Advance Mobile Phone Service (AMPS).

44. The portable data terminal and telephone handset of claim 43, wherein said controller comprises means to give priority to communications in the AMPS mode over the CDPD mode.

45. A portable communication terminal comprising:

a cellular telephone handset operable in a cellular digital packet data (CDPD) mode and an Advanced Mobile Phone Service (AMPS) mode; and

a controller arranged to select one of said two modes for handset operation, wherein said controller controls said handset to receive all incoming paging signals for both CDPD and AMPS operation on a channel designated for CDPD operation, said controller comprising means to control said handset to respond to an incoming paging signal with an acknowledgement signal in the AMPS mode.

46. The portable communication terminal of claim 45, wherein said controller further comprises means to control said handset to remain in a low-power, dormant state until an indication is received by said handset that communication is desired.

47. The portable communication terminal of claim 46, wherein said controller further comprises means to periodically detect for incoming paging signals in said CDPD mode.

48. The portable communication terminal of claim 47, further comprising a display arranged to indicate the presence of an incoming paging signal in the CDPD mode and identity data included with said incoming paging signal.

49. The portable communication terminal of claim 47, wherein said controller further comprises means for distinguishing identity data included with said incoming paging signal, and means for determining an appropriate acknowledgement signal from among a plurality of pre-programmed acknowledgement messages, responsive to said identity information.

50. The portable communication terminal of claim 48, wherein said controller further comprises means for automatic dialing in said AMPS mode responsive to said identity data included with said incoming paging signal.

51. A telephone handset that communicates with analog cellular signals and with cellular digital packet data (CDPD) signals over frequency channels, comprising:

analog cellular signal circuitry that transceivers analog cellular signals;

CDPD signal circuitry that transceivers CDPD signals;

a discriminating circuit that discriminates between analog cellular signals and CDPD signals; and

a control processor, coupled to the discriminating circuit, that controls the analog cellular signal circuitry and the CDPD signal circuitry such that the CDPD signals are transceived over the same frequency channels as the analog cellular signals,

wherein the analog cellular signal circuitry and the CDPD signal circuitry are operatively coupled to a single, common radio frequency transceiver, wherein the radio frequency transceiver is responsive to the control processor, and

wherein the discriminating circuit is responsive to a difference in paging signals that contain information about analog cellular signals and paging signals that contain information about CDPD signals to cause the control processor to switch between the analog cellular signal circuitry and the CDPD signal circuitry.

52. The handset of claim 51, wherein said control processor comprises means for determining identity data contained in a paging signal.

53. The handset of claim 52, wherein said control processor further comprises means for providing control signals responsive to a determination of the identity data.

54. The handset of claim 52, further comprising means for interrupting communication using the CDPD signal circuitry in response to detection of a paging signal received by the radio frequency transceiver and which contain information regarding analog cellular signals.

55. The handset of claim 53, further comprising means for carrying out an automatic call back responsive to said control signals.

56. A telephone handset that communicates with analog cellular signals and with cellular digital packet data (CDPD) signals over frequency channels, comprising:

analog cellular signal circuitry that transceivers analog cellular signals;

CDPD signal circuitry that transceivers CDPD signals;

a discriminating circuit that discriminates between analog cellular signals and CDPD signals;

a control processor, coupled to the discriminating circuit, that controls the analog cellular signal circuitry and the CDPD signal circuitry such that the CDPD signals are transceived over the same frequency channels as the analog cellular signals, and

further comprising a scratch pad memory connected to the control processor, the scratch pad memory comprising a static random access memory providing scratch pad input to the control processor.

Figure 1

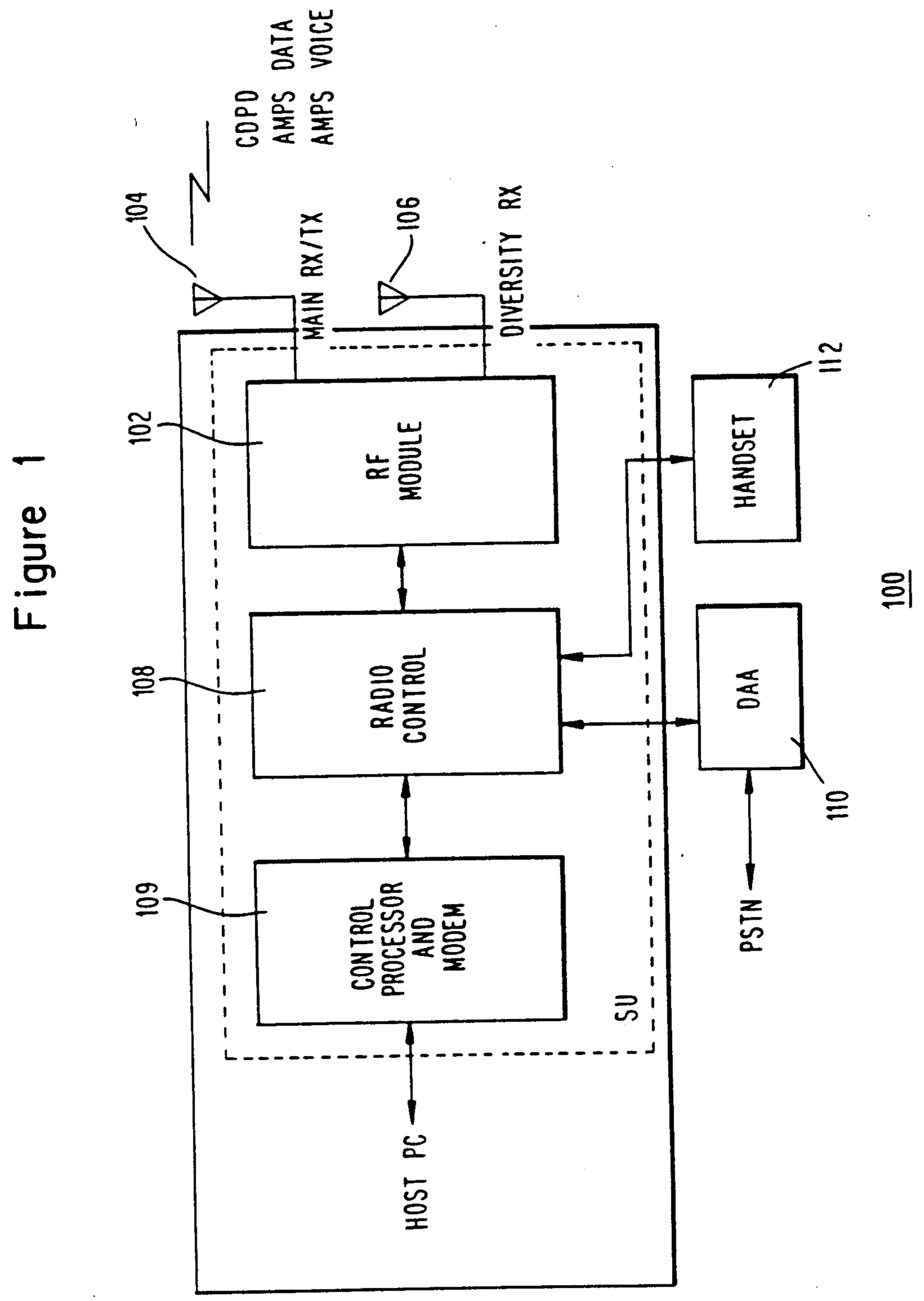

MOFFAT & CO.

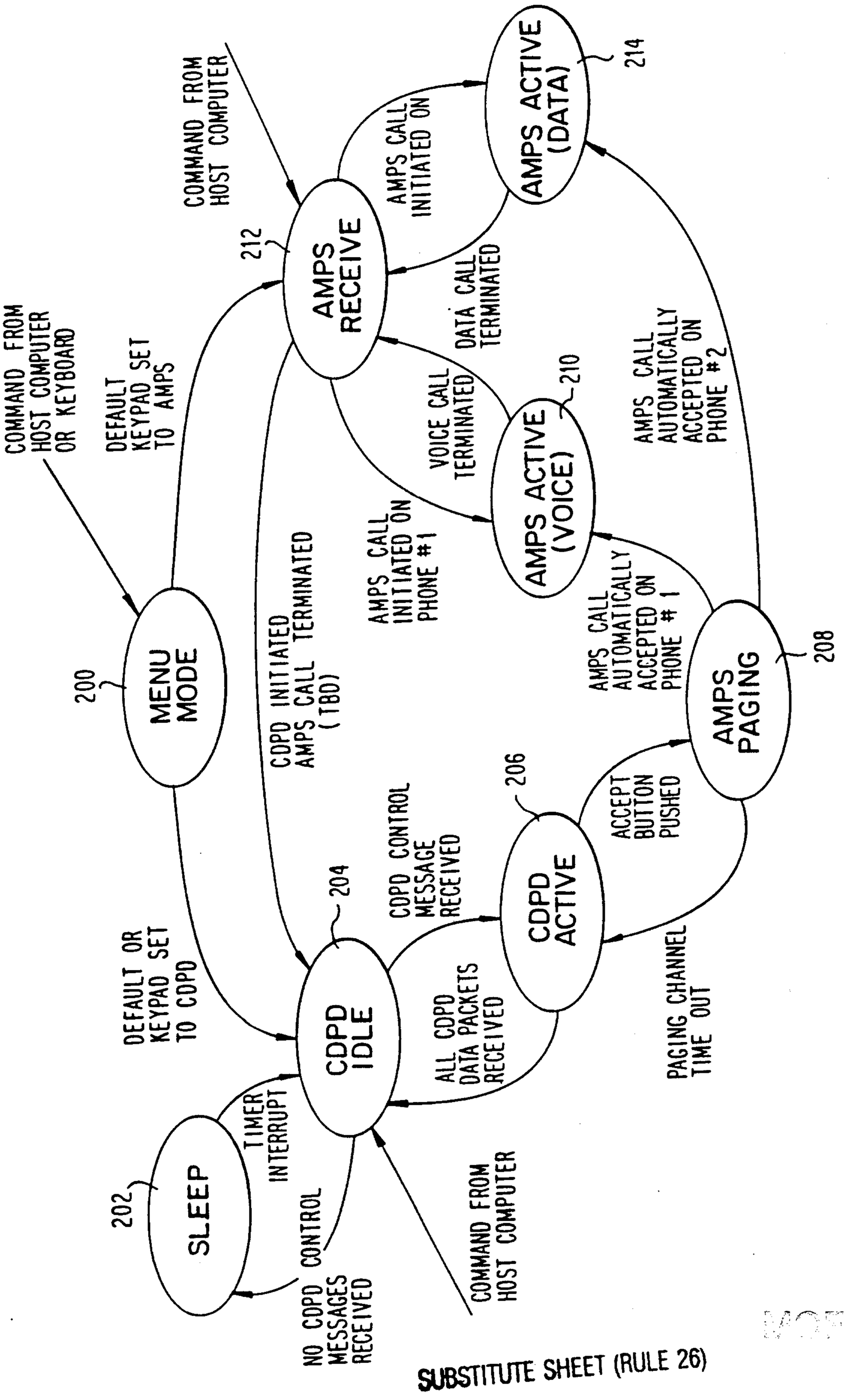

Figure 2

MOFFAT & CO.

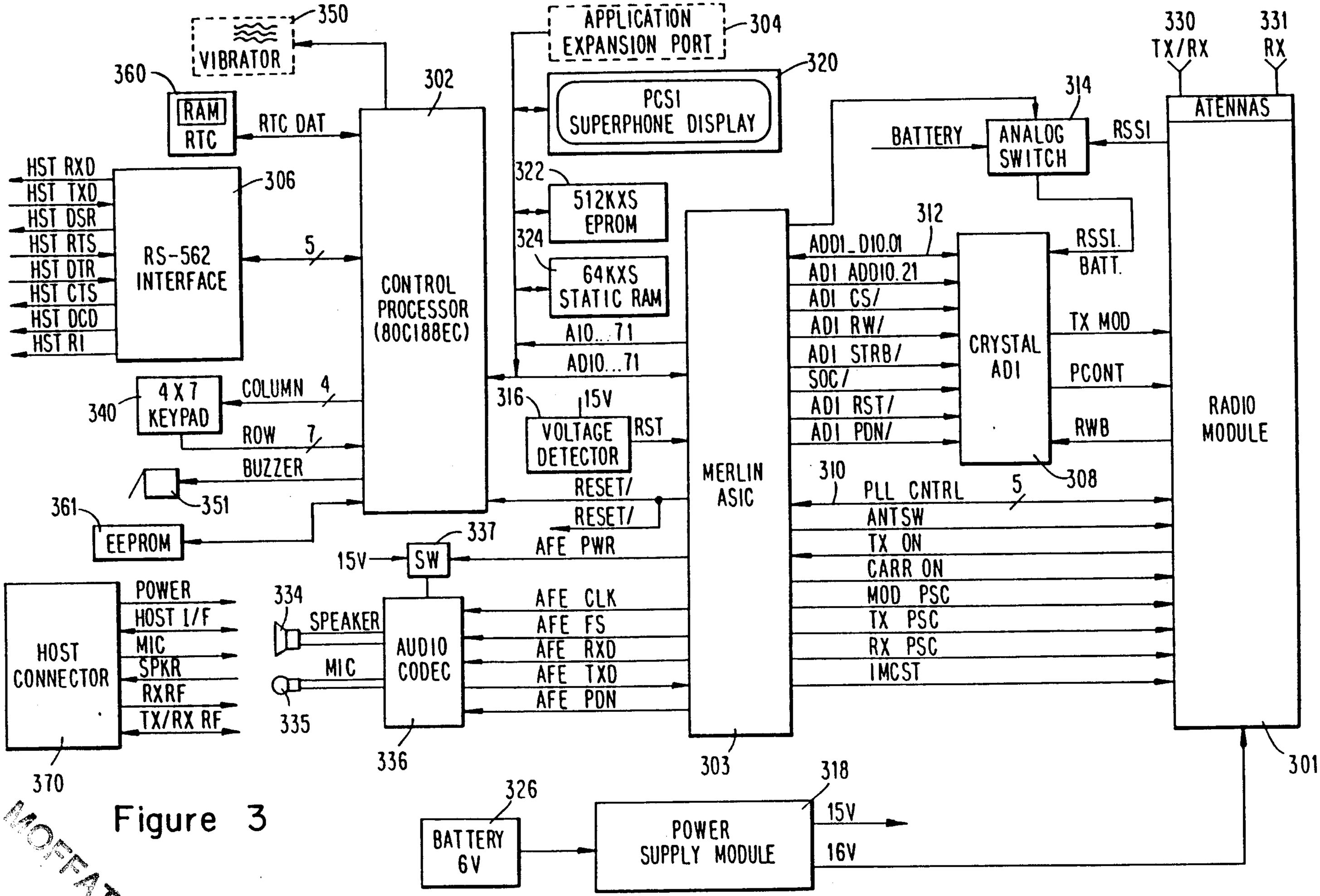

Figure 3

MOFFAT & CO

PCT/US94/10081

2170513

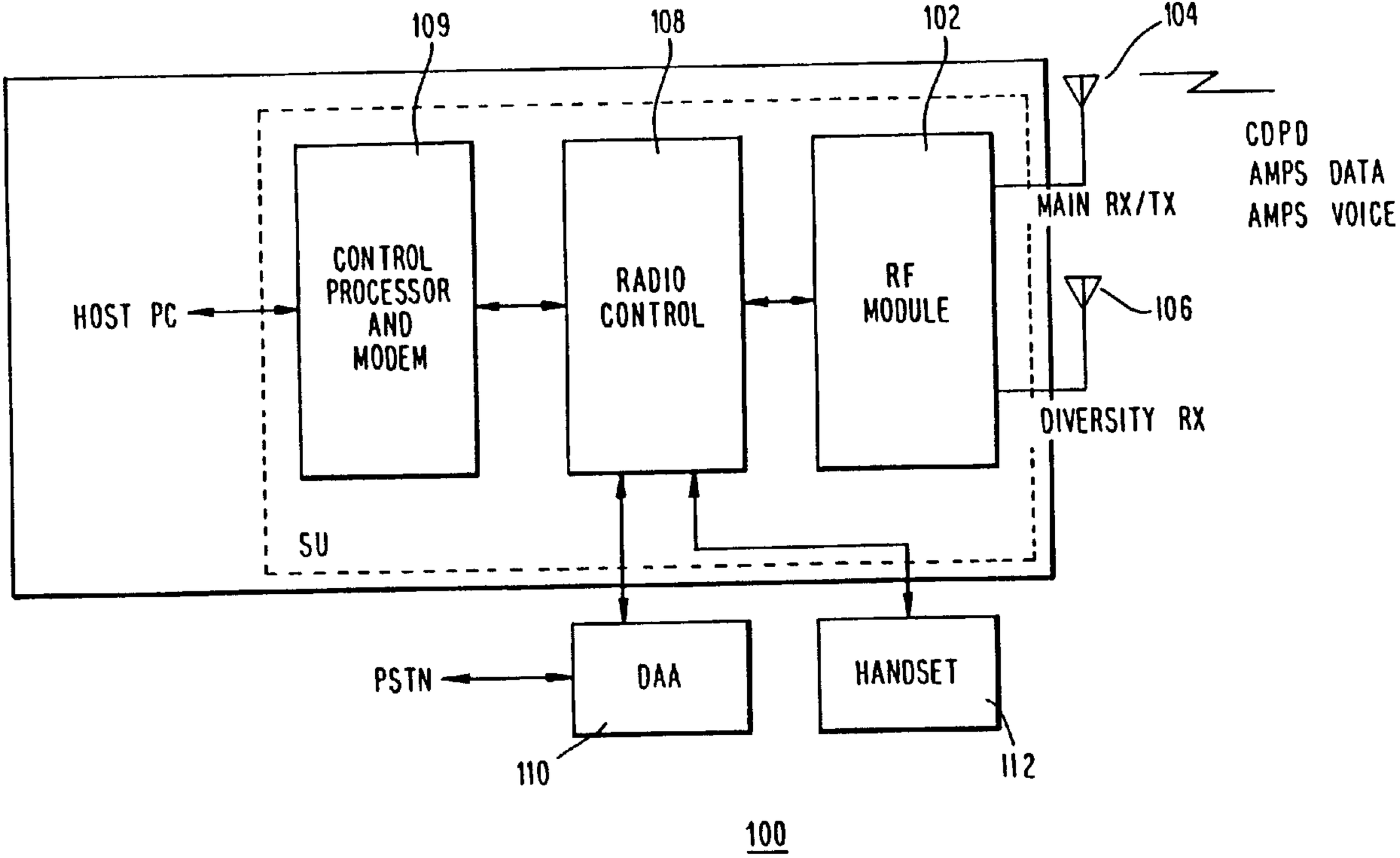
109
108
102
104
CDPD
AMPS DATA
AMPS VOICE
MAIN RX/TX
HOST PC
CONTROL PROCESSOR AND MODEM
RADIO CONTROL
RF MODULE
106
DIVERSITY RX
SU
PSTN
DAA
HANDSET
110
112

100