June 4, 1935. G. H. ANDERSSON 2,003,621

CENTRIFUGAL SEPARATOR

Filed Jan. 16, 1933 2 Sheets-Sheet 1

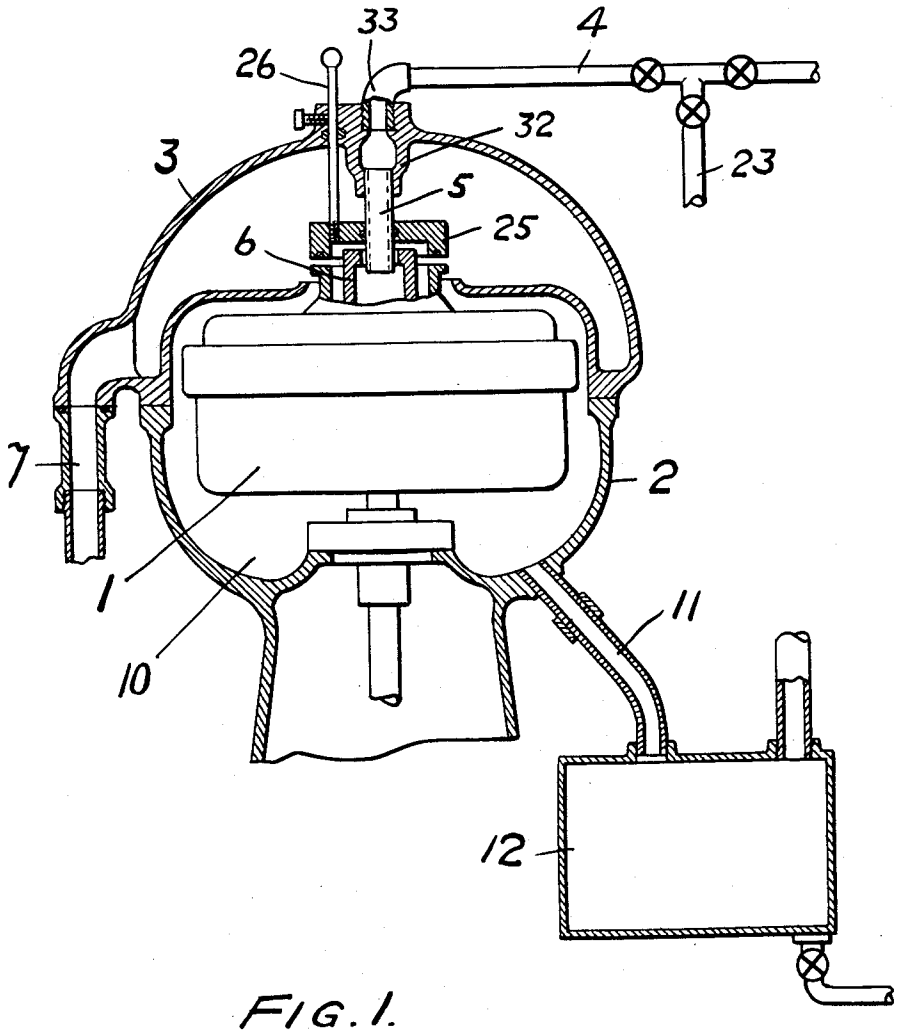

FIG. 1.

INVENTOR

Gustav Harry Andersson

BY

Busser & Harding

ATTORNEYS.

WITNESS:

Robt R. Kitchel.

June 4, 1935. G. H. ANDERSSON 2,003,621

CENTRIFUGAL SEPARATOR

Filed Jan. 16, 1933 2 Sheets-Sheet 2

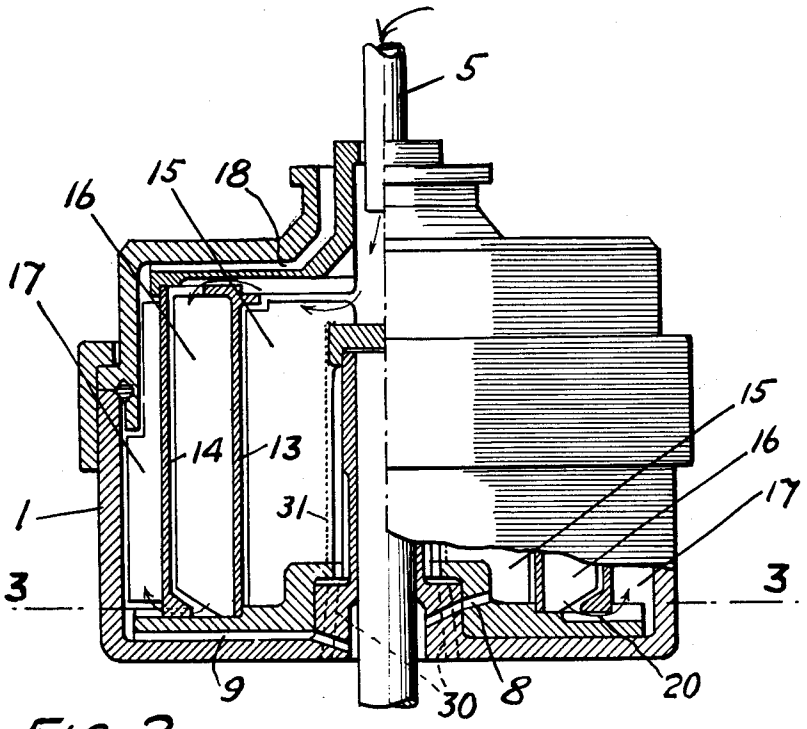

FIG. 2.

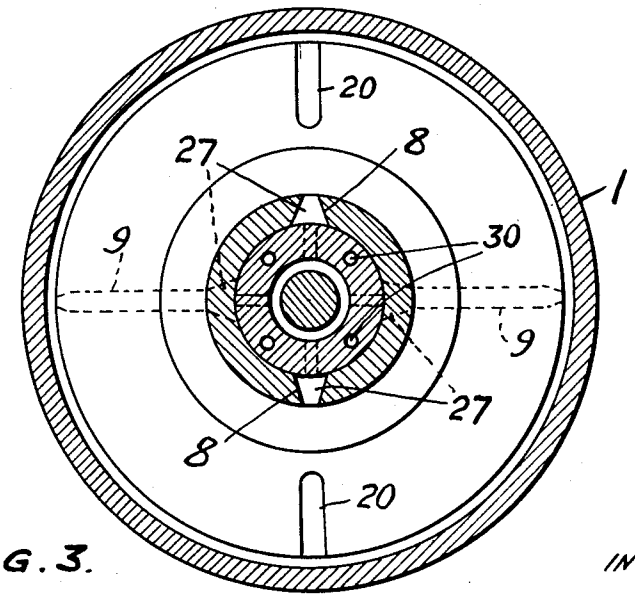

FIG. 3.

INVENTOR

Gustav Harry Andersson

BY

Busser & Harding

ATTORNEYS.

WITNESS:

Robt R. Ritchel.

Patented June 4, 1935 2,003,621

UNITED STATES PATENT OFFICE

2,003,621

CENTRIFUGAL SEPARATOR

Gustav Harry Andersson, Stockholm, Sweden, assignor to The De Laval Separator Company, New York, N. Y., a corporation of New Jersey

Application January 16, 1933, Serial No. 651,975
In Germany September 14, 1932

8 Claims. (Cl. 233—13)

This invention relates to centrifugal separators and is more particularly applicable to that type of separator wherein the admission liquid or mixture of liquids contains solids, some of which are lighter and some of which are heavier than the liquid, the main function of the separator being to purify the liquid.

At the conclusion of the separating operation, a certain amount of liquid remains in the bowl, which, in many cases, as, for example, in the purification of volatile scouring liquids such as trichlorethylene and carbon tetrachloride, gives rise to trouble in the dismantling and cleaning of the bowl, owing to the evolution of dangerous gases.

In an application filed by Stig Beskow September 14, 1932, Serial No. 633,034, drain channels are provided in the bottom of the bowl or in a separate member in the bottom of the bowl, the drain channels communicating with the bowl chambers and discharging adjacent the axis of revolution of the bowl.

The present invention involves certain improvements in the Beskow invention. Said improvements comprise means for blowing steam or a hot gas through the bowl to remove any liquid that may adhere to the various parts of the bowl and to the separated solids remaining in the bowl, without removing the receiving containers or collecting vessels which are positioned over the bowl to receive the purified liquid.

Owing to the radial movements of the bowl, centrifuges of the usual type have a play between the rim of the inlet opening of the bowl and that part of the supply pipe which extends down into the said opening. In my invention special means are provided to close the annular opening thus formed during the bowl drying operation, thereby enhancing the efficiency of such operation.

It may also be desirable, during the drying operation, to close the heavier liquid discharge opening of the bowl, so as to insure the passage of all the drying gas through the described drain channels. This closure, as well as the closure of the annular opening at the feed inlet, is effected, in my preferred construction, by a single packing device readily movable into operative position before drying and out of operative position preparatory to starting the bowl.

The invention also comprises an improvement in the drain channels, which is hereinafter particularly described.

The constructions set forth in the said Beskow application are illustrative of centrifuges to which my invention is applicable. In order to fully disclose my invention, I have herein illustrated a centrifugal bowl comprising features disclosed in the Beskow application in connection with other features illustrative of my invention.

Fig. 1 is an elevation, partly in section, of a centrifugal bowl and appurtenant parts.

Fig. 2 is an elevation, partly in section, of the bowl.

Fig. 3 is a horizontal section through the line 3—3 of Fig. 2.

The centrifugal bowl 1 is enclosed by the upper part 2 of the frame and by a cover 3 containing the collecting vessel or vessels. The top of the cover has a hollow boss 32, from which depends a tube or pipe 5 extending into the distributor, 6, which may have a tubular or a frustro-conical shape. At the top the hollow boss 32 carries an elbow 33, to which is secured a supply pipe 4.

The mixture to be separated is admitted to part 6 of the bowl through pipe 4 and tube 5. The bowl may be divided by means of cylindrical partitions 13 and 14 into annular chambers 15, 16 and 17, through which the liquid successively streams as indicated by the arrows. The separated solids deposit on the outside or inside walls of the respective chambers, dependent on whether such solids are heavier or lighter than the liquid. The purified liquid, or the heavier of two liquids if the mixture contains more than one liquid, is discharged from the bowl through the channel 18 and streams out between the distributor 6 and the neck of the bowl into the collecting vessel in the cover and discharges therefrom through conduit 7.

When the rotation of the bowl ceases, the chamber 15 empties out through the channels 8 and the chambers 16 and 17 empty out through the channels 9; chambers 16 and 17 being connected at their lower ends by overflow channels 20. As the outer ends of the channels 8 and 9 are situated inside the free level of liquid in the bowl, a flow of liquid cannot occur through these channels during the separation, and for this reason large quantities of solids cannot deposit in them. The drainage liquid from channels 8 and 9 flows into the chamber 10 and thence, through a conduit 11, into a collecting tank 12, which is suitably connected, by means not shown, with a plant for the separation of scouring liquid.

After the bowl has been stopped and the liquid drained out, steam or suitable gas is blown into the bowl through a pipe 23 connected with the supply pipe 4, the gas or steam escaping through the liquid discharge channel 18 and through the drain channels 8 and 9.

Instead of introducing the steam or gas through the pipes 23 and 4, suction may be applied in these pipes to draw gas or steam through the bowl in the reverse direction.

The effect of the gas stream would be en-

hanced if all the gas entering or leaving the bowl were compelled to flow through the drain channels 8 and 9. In Fig. 1 this is accomplished by means of an annular flanged closure or packing 25 having a sliding fit on tube 5 and movable downward, by means of a rod 26, so as to engage the upper edges of the feed tube 6 and the bowl neck, thereby closing both the inlet to the bowl and the heavy liquid outlet. Thus it is possible to drive all the steam through the bottom outlets and clean out any of them that may be partly closed. If it is desired to not close the channel 18 to the passage of drying gas, the downwardly depending annular flange of the closure 25 is omitted.

Each of the drain channels 8 and 9 is, between its ends, expanded and then sharply contracted to form a collecting chamber 27, in which any solids separated in the channels are deposited. Owing to the great throughflow area in the chambers, the layer of deposited solids is very thin and is therefore easily broken up by the liquid when the bowl stops. It is advantageous to position the chambers 27 at such a distance from the rotation axis of the bowl that a free level is formed in them. The entrance ends of the drain chanenls should be sufficiently narrow to insure a minimum of exchange of liquid between the annular chambers 15, 16 and 17 and the channels, so that, also, a minimum deposit of solids occurs in the drain channels. To this end the entrance ends of either or both sets of channels may be restricted.

If the liquid to be separated consists of a mixture of liquids, the separated lighter components collect near to the rotation axis of the bowl in the chamber 15, whence it discharges through channels 30. In order to prevent these channels from becoming clogged by light solids depositing therein, it is advantageous to provide a straining or filtering device in the chamber 15. Such device may consist of a cylindrical reticulated member 31, such as a perforated metal cylinder or a wire mesh screen.

What I claim and desire to protect by Letters Patent is:

1. The combination with a centrifugal separator bowl having an open top and a centrally positioned supply tube extending into the open top of the bowl and spaced therefrom to form an annular opening, said bowl having drainage channels in its bottom part, means operative through said supply tube to admit to or exhaust from the bowl a drying gas, of a closure for said annular opening and means to move the closure relative to the bowl and feed tube into and out of position to close the opening.

2. The combination with a centrifugal separator bowl having an open top and a centrally positioned supply tube extending into the open top of the bowl and spaced therefrom to form an annular opening, said bowl having drainage channels in its bottom part, means operative through said supply tube to admit to or exhaust from the bowl a drying gas, of a packing sleeve having a sliding fit on said supply tube and movable vertically into position to abut against the circumferential edge of said annular opening to prevent the passage of drying gas through said opening.

3. The combination with a centrifugal separator bowl having an open neck, a centrally positioned supply tube extending into and spaced from the neck of the bowl, means operative through said supply tube to admit to or exhaust from the bowl a drying gas, a distributor extending into the bowl neck and spaced from both the supply tube and the bowl neck and providing annular openings between the supply tube and distributor and between the distributor and the bowl neck, said bowl having drainage channels in its bottom part, of means movable into and out of position to close both said openings.

4. The combination with a centrifugal separator bowl having an open neck, a centrally positioned supply tube extending into the neck of the bowl, a distributor extending into the bowl neck and spaced from both the supply tube and the bowl neck, said bowl having drainage channels in its bottom part, of a packing sleeve having a sliding fit on said supply tube and movable vertically into position to abut against the circumferential upper edges of the bowl neck and distributor to close the openings inside the bowl neck and outside the supply tube during the passage of a drying gas through the bowl and said drainage channels.

5. A centrifugal separator bowl having concentric annular separating chambers and drainage channels in the bowl bottom communicating with said separating chambers and extending inward toward and discharging adjacent the axis of rotation, said channels being widened between their ends to form between their ends chambers for the deposit of separated solids.

6. A centrifugal separator bowl having concentric annular separating chambers and drainage channels in the bowl bottom communicating with said separating chambers and discharging adjacent the axis of rotation, said channels being widened between their ends to form chambers for the deposit of separated solids, and being narrowed at their entrance ends to minimize the exchange of liquid between the annular separating chambers and the channels during the normal operation of the bowl.

7. The combination with a centrifugal separator bowl having an open top and a centrally positioned supply tube extending into the open top of the bowl and spaced therefrom to form an annular opening, said bowl having drainage channels in its bottom part, said supply tube also affording means to admit to or exhaust from the bowl a drying gas, of a closure surrounding said feed tube and extending over said annular opening, means extending through the cover and adapted to support said closure above and spaced from said opening, said means being adjustable to move said closure down into position to seal said opening preparatory to blowing a cleaning fluid through the bowl.

8. The combination with a centrifugal separator bowl having an open neck, a centrally positioned supply tube extending into and spaced from the neck of the bowl, a distributor extending into the bowl neck and spaced from both the supply tube and the bowl neck and providing annular openings between the supply tube and distributor and between the distributor and the bowl neck, said bowl having drainage channels in its bottom part, of means movable into and out of position to close both said openings, said means comprising a disc enclosing the feed tube and movable thereon and an annular flange on the disc in alignment with the bowl neck.

GUSTAV HARRY ANDERSSON.