United States Patent

Abplanalp et al.

[15] **3,675,034**

[45] **July 4, 1972**

[54] BLOCKING CIRCUIT FOR INBOARD ENGINE IGNITION

[72] Inventors: **George W. Abplanalp,** Belmont; **Steve Corson,** Luther, both of Mich.

[22] Filed: **July 6, 1971**

[21] Appl. No.: **159,666**

[52] **U.S. Cl.** .....**307/9,** 114/211, 115/.5 R

[51] **Int. Cl.**.....**H02j 1/00**

[58] **Field of Search**.....307/9, 10, 116, 141, 141.4, 307/141.8; 114/211; 115/.5 R; 123/179 A; 98/1; 303/19

[56] **References Cited**

UNITED STATES PATENTS

3,599,591	8/1971	Edelson	307/9
3,489,912	1/1970	Hoffman, Jr.	307/9

Primary Examiner—Herman J. Hohauser

Attorney—Price, Heneveld, Huizenga & Cooper

[57] **ABSTRACT**

A blocking circuit is provided in combination with an inboard motorboat engine, blower, and ignition circuit which prevents actuation of the ignition circuit until after the blower has operated for a predetermined period of time to ventilate the engine compartment. A time-delay switch is operated by a blower-activated switch in circuit with the ignition circuit. Upon actuation of the blower, the blower-activated switch closes energizing the time-delay switch. After a predetermined time interval, the time-delay switch closes and completes the ignition circuit whereupon the craft may be started and operated in a conventional manner. An emergency ignition switch is also provided in parallel with the blocking circuit to allow operation of the engine in the event of an emergency. Use of the emergency switch renders it inoperative requiring that it be replaced after such use to prevent indiscriminate subsequent use by an unconscionable operator.

6 Claims, 9 Drawing Figures

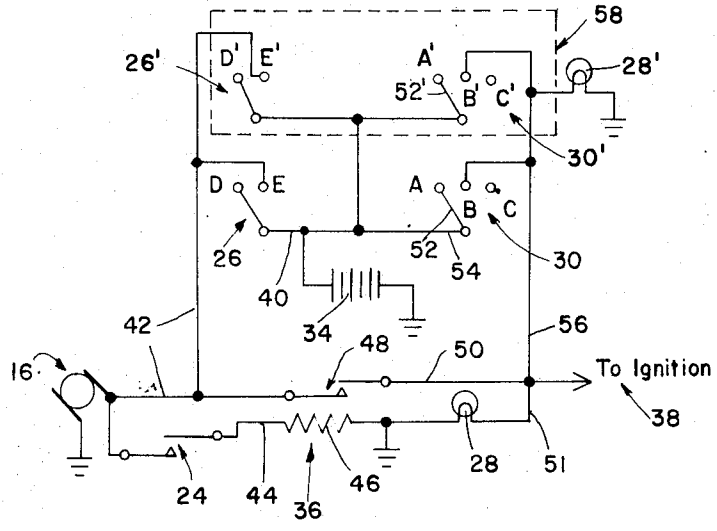

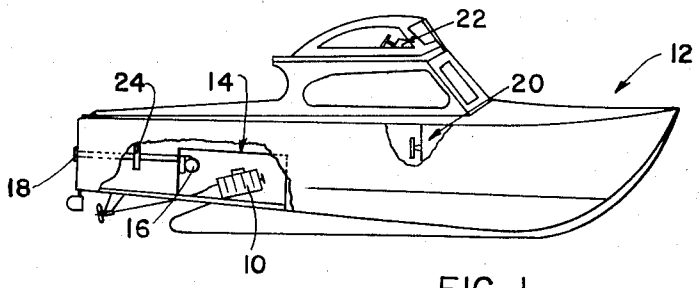

FIG. 1

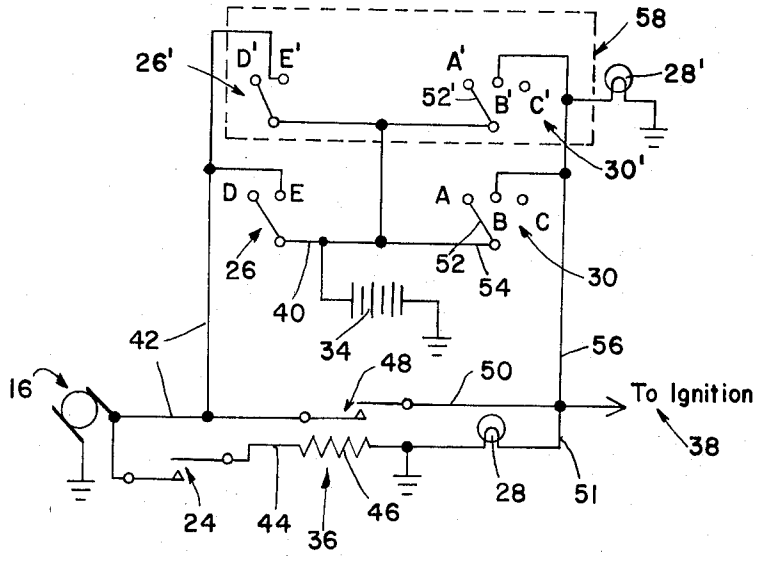

FIG. 3

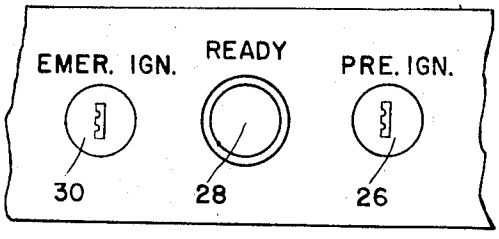

FIG. 2

INVENTORS
GEORGE W. ABPLANALP
STEVE CORSON

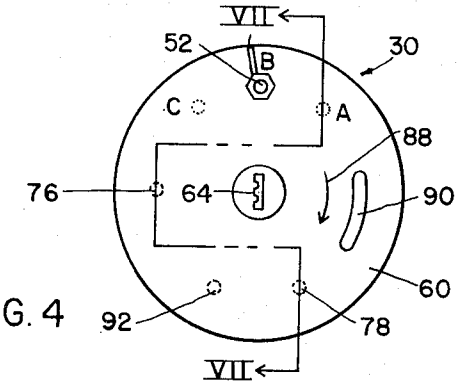

FIG. 4

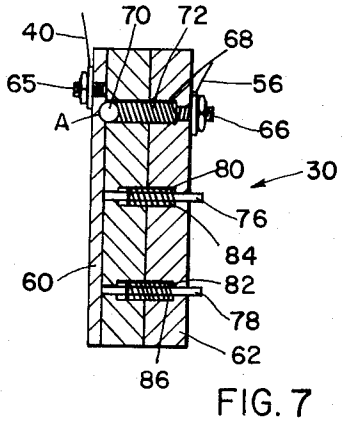

FIG. 7

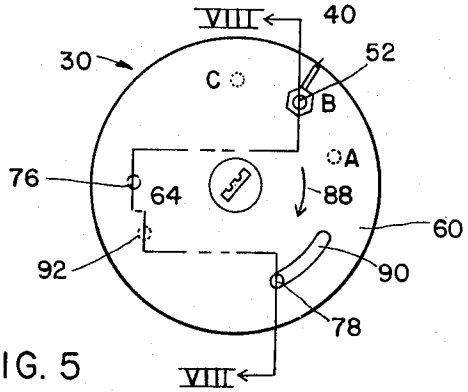

FIG. 5

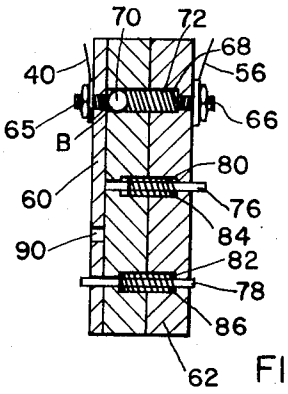

FIG. 8

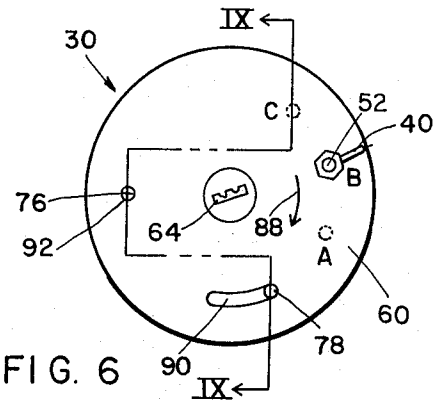

FIG. 6

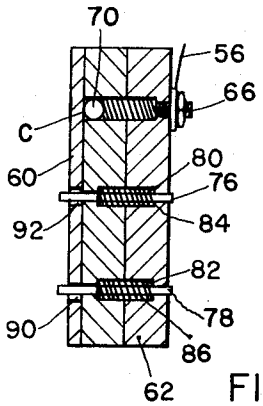

FIG. 9

INVENTORS

GEORGE W. ABPLANALP
STEVE CORSON

BLOCKING CIRCUIT FOR INBOARD ENGINE IGNITION

BACKGROUND OF THE INVENTION

The confinement of an engine to a closed compartment in a motorboat requires that the accumulated fumes in the engine compartment be completely exhausted therefrom prior to the connection of the power supply to the ignition circuit and the subsequent starting of the engine. Failure to adequately ventilate the engine compartment can result in the accumulation of explosive gases resulting in an explosion capable of destroying the boat and everything on it.

The conventional approach to this problem has been to rely on the operator to remember to vent the compartment prior to ignition. It will be readily apparent that such an approach is dangerous due not only to the fallibility and forgetfulness of human operators but in addition due to the reluctance on the part of the operator to wait the additional few minutes for the blower to remove the accumulated fumes in the compartment. Various ignition control systems have been proposed to prevent the starting of the engine until after it has been determined that fumes no longer exist in the engine compartment. The Hoffman, Jr. U. S. Pat. No. 3,489,912 and the VanRanst U. S. Pat. No. 3,315,584 are examples of such starting systems. Each of these devices disclosed starting systems for motor boats. These systems include a delay mechanism for preventing engine ignition for a predetermined time and a blower motor to vent the engine compartment. In addition, each of these systems relies principally upon a combustible vapor detector located within the engine compartment to detect the presence (or absence) of combustible vapor. If the sensor indicates the absence of fumes, the ignition circuit is rendered operative and the engine may be started. Unfortunately, however, present state-of-the-art vapor detectors of this type having any degree of accuracy and reliability are extremely expensive. Some are, however, lower in cost but their reliability and accuracy leave much to be desired. In addition, devices which rely upon a vapor detector are not always practical because the detector will measure the concentration of fuel vapors only in the immediate vicinity of the detector head. Therefore, an explosion could result if combustible vapors were present in some other area of the engine compartment.

Zurit, et al. U. S. Pat. No. 2,526,446 discloses an ignition system for boats having a mechanical timer switching mechanism to operate a blower in the engine compartment of the craft prior to the actual closing of the ignition circuit.

Each of the above-mentioned starting systems block operation of the ignition circuit until the blower has been operated to change the air in the engine compartment. The systems are relatively complicated and in the event of a component failure, the entire system is rendered inoperative. In addition, there are occasions when danger is imminent and the starting system must immediately be rendered operative.

Hoffman, Jr. provides an override or emergency ignition switch which serves to completely bypass the vapor detector and time-delay circuitry and allows for the application of power from the battery directly to the ignition circuit. Starting systems which do not have an emergency-start provision to bypass the ignition or blocking circuit systems are, of course, unsafe as the operator must be able to start the engine and move the boat out of a dangerous situation immediately. Starting systems which are designed with an override or emergency ignition system are virtually useless particularly when an unconscionable operator who, in his haste to get underway as quickly as possible, completely ignores the normal time-delay starting circuit.

Some of the more sophisticated systems are designed to stop the engine if fuel vapors build up while the boat is underway. These systems, of course, are quite unsafe because if engine power is lost without warning, the boat and the operator are placed at the mercy of the wind, the tide, or the current and could result in a collision or running aground before the operator has time to lower his anchor.

SUMMARY OF THE INVENTION

This invention relates to a safety device for use in inboard motorboats which precludes the actuation of the ignition prior to the immediately preceding venting or expelling of fumes from the engine compartment. In addition, the invention provides an override or emergency ignition switch which because of its construction can be operated only one time. When the emergency switch has been turned off, the switch cannot be returned to its "on" position and replacement is required. This factor alone which provides for safety operation also serves as a deterrent to the unconscionable operator and in the absence of an actual emergency he will be compelled to rely on the time-delayed ignition system which vents the engine compartment prior to actual ignition. Specifically, there is provided an improved combination of an inboard boat engine, an ignition circuit for the engine, a blower adapted for blowing fumes out of the engine compartment, a switch responsive to operation of the blower, and a blocking means for automatically blocking or delaying the ignition circuit from actuation until after the blower has functioned a predetermined length of time. An emergency switch is also provided which operates to bypass the blocking circuit for emergency use which switch can be used only one time, thereafter requiring complete replacement.

Accordingly, it is an object of this invention to provide a circuit which will prevent explosions on inboard motorboats due to the failure of the operator to properly ventilate the engine compartment prior to starting the engine.

It is another object of this invention to provide an ignition circuit which will automatically prevent actuation of the circuit until after the fumes have been expelled from the engine compartment.

It is yet another object of this invention to provide an ignition circuit which will preclude ignition if the blower for the engine compartment is not operating properly.

It is a related object of the invention to provide an override or emergency switch which will render the ignition system operative immediately—but which once used must be replaced, thereby preventing indiscriminate use thereof.

Other objects and advantages of the invention will become apparent upon reference to the following drawings in detailed discussion.

BRIEF DISCUSSION OF THE DRAWINGS

FIG. **1** is a partially schematic elevational view with parts in section of an inboard motorboat utilizing the invention;

FIG. **2** is a partial elevational view illustrating a portion of a control panel for the motorboat;

FIG. **3** is a schematic circuit diagram illustrating a blocking circuit constructed in accordance with the invention;

FIGS. **4**, **5** and **6** are front elevational views of the emergency switch of the invention shown in its various operating positions; and

FIGS. **7**, **8** and **9** are cross-sectional views taken along the planes VII—VII, VIII—VIII and IX—IX of FIGS. **4**, **5** and **6**, respectively, illustrating the operation of the switch in its various operating positions.

DESCRIPTION OF THE PREFERRED EMBODIMENT

Turning now to the drawings, FIG. **1** illustrates the invention as providing a safety circuit for the operation of an engine **10** in an inboard motorboat **12**. The engine is normally located in a closed engine compartment **14**. A blower **16** is conventionally utilized to vent the compartment **14** by expelling the fumes from the compartment through a conduit to an exit port **18**. Switch **24** is provided in the conduit at the outlet side of the blower **16** to detect the flow of air to the exit port **18**.

The craft may be controlled in a conventional manner from the enclosed cabin **20** or from an upper bridge **22** each of these areas having duplicate steering, ignition, and like control mechanisms arranged in a conventional manner. As illustrated in FIG. **2**, each of these control panels, in addition to the usual

conventional controls, also include a key-operated, preignition switch **26**, a "ready" indicator light **28**, and a key-operated, emergency ignition switch **30**. It being understood, of course, that one or any number of individual control panels may be provided depending upon the design of the craft.

Referring now to FIG. **3**, the blocking circuit of the invention is illustrated in schematic form. In accordance with the invention, the blocking circuit is provided to prevent by means of switch **36** the connection of the ignition circuit **38** (not shown) to the craft power supply **34** until after the blower **16** has operated a predetermined time to vent fumes from the engine compartment **14**. A switch **24**, operable in response to movement of air from the blower **16** through the conduit, applies current to the time-delay switch **36** thereby preventing its operation until after the blower has started to operate. As will be more fully explained hereinafter, an emergency ignition switch **30** is also provided in parallel with the blocking circuit to connect the battery power supply **34** directly to the ignition circuit **38** when an emergency situation arises.

The preignition switch **26** is connected by line **40** to one side of the battery power supply **34** and is provided with an "off" position (D) and an "on" position (E). When it is desired to start the engine under normal operating conditions, switch **26** is moved from position "D" to position "E" completing an electrical circuit between power supply **34** to the blower motor **16** through line **42**. As illustrated, the opposite side of the blower motor **16** is grounded in a conventional manner. One side of normally opened air sensing switch **24** is also connected to line **42**. As described in connection with FIG. **1**, switch **24** is located in the air outlet conduit. Operation of the blower will, therefore, cause the contacts of switch **24** to close allowing the current to flow through the contacts and through line **44** to the heater elements **46** of thermal time-delay relay **36** to ground.

As the blower commences operating, switch **24** closes and the current is applied to the heater elements **46** of the time-delay **36** causing the contacts **48** to close after a predetermined time. Preferably, the time delay is on the order of approximately 10 minutes; however, this may be varied to suit the size of the engine compartment, the capacity of the blower, or like parameters.

As contacts **48** close, one of them being connected by line **42** and switch **26** to the battery **34**, the current is applied to the ignition circuit **38** through line **50** and to the indicator lamp **28** through line **51** to ground indicating that the engine compartment **14** has been vented and that the engine may be safely started.

In the event an emergency situation should arise and the engine must be immediately started, an emergency ignition or override switch **30** is provided to directly connect the power supply **34** to the ignition circuit **38**. The emergency switch is provided with a movable contact arm **52** connected by line **54** to the battery power supply. The opposite side of the switch is provided with three contact positions labeled A, B and C. Position A is a normally "off" position. Position B is an emergency ignition "on" position and connects the power supply directly to the ignition circuit **38** to line **56**. As will be more fully described in connection with FIGS. **3** through **8**, when the switch has been moved to position B, i.e., the ignition "on" position, the engine can only be stopped by moving the switch to the C position. It cannot be returned to the A position. Once the switch has been moved to the C position, it cannot be returned to the "on" or B position. The switch must be replaced with a switch in the A or "off" position. This feature insures that the engine will not be operated except in the case of an emergency thereby preventing an operator in his haste to "get underway" from bypassing the normal time-delayed starting procedures.

Since the craft may often be operated from the bridge **22** rather than the closed cabin **20**, it is desirable to provide a duplicate set of controls on the bridge control panel. These duplicate controls are illustrated in phantom in block **58** in FIG. **3** and include a preignition switch **26'**, an indicator lamp **28'**, and an emergency ignition switch **30'** connected in parallel to the circuit previously described. The operation is the same as that previously described. It is also understood that separate similar circuits may be provided for craft having multiple engines and multiple engine compartments or that several blowers and ignition circuits may be controlled by the circuit described above.

Referring now to FIGS. **4** through **9**, the emergency ignition switch **30** for use with the above-described circuit will be described in detail. Basically, switch **30** comprises two relatively movable sections. The movable contact **52** is carried on a rotatable section **60** and a relatively fixed supporting structure **62** is provided to carry the fixed contact member B (FIG. **7**). The fixed supporting structure **62** additionally carries a plurality of biased pin members to control the rotation of the relatively movable parts as will be more fully set out hereinbelow. The two sections **60** and **62** are rotatable with respect to each other and may be rotatably secured at their center section by means of a centrally located conventional lock and tumbler arrangement **64**. Constructional details of such lock are well known to those skilled in the art and they will not be described herein in detail. Preferably, the same key utilized to operate the preignition switch **26** will also be utilized to operate the emergency switch **30**.

The movable contact element **52** is in the form of a terminal **65** threadable received in and passing through the rotatable section **60**. The opposite end of the terminal is threaded and provided with conventional fastening means thereon for securement to the line **40** connected in circuit with the power supply **34** of the craft (FIG. **3**). A similar terminal **66** having connecting means thereon extends from the opposite side of the switch in the support section **62** and may be connected to line **56** to the ignition circuit **38**.

The terminal **66** extends into the supporting structure **62** a short distance where a slightly enlarged opening **68** is provided. Mounted within the opening **68** is a contact ball **70** and bias spring **72** which serves to bias the contact ball **70** toward the movable section **60**. The terminal **66**, the bias spring **72**, and the contact ball **70** are each formed of conductive material and are electrically connected to each other to form contact section B. The rotatable section of the switch **60** is provided with a series of detents or recesses at the positions labeled A, B and C. These recesses are located on an arc so that as the switch is rotated about the central portion thereof, the ball **70** will be biased by the spring **72** into one of the recesses A, B or C. As illustrated in FIGS. **4** and **7**, the ball **70** is biased into recess A thereby assuming an "off" position of the switch as shown in FIG. **3**.

The supporting section **62** also carries a pair of pin members **76** and **78**. These pins are movable laterally within section **62** in openings **80** and **82** provided therein. The openings **80** and **82** are enlarged at the center portion of section **62** to receive bias springs **84** and **86** which serve to bias the pins **76** and **78** toward the movable section **60**.

Upon the occasion of an emergency, the key is inserted in the lock **64** and the rotatable switch section **60** is turned to the "on" or B position. As illustrated in FIGS. **5** and **8**, the switch rotates in a clockwise direction as indicated by the arrows **88**. As the terminal B detent comes into alignment with the ball **70** electrically connected to terminal **66**, electrical contact is made through the switch applying the current from battery **34**, line **40**, contact **52**, terminal B, ball **70**, bias spring **72**, terminal **66**, and through line **56** to the ignition circuit **38** (FIG. **3**). The movable section **60** of the switch is provided with an elongated slot **90** and an opening **92**. The slot and opening each have a width or diameter slightly larger than the diameter of the pin members **76** and **78**. The slot **90** is arc-shaped having a length along the radius equal to the distance between detents B and C. Simultaneously, with the positioning of the ball **70** in the detent B closing the circuit, pin **78** is biased by the spring **86** into the elongated slot **90** thereby preventing the switch from being turned in a counterclockwise direction toward the A position. The boat may be then started and operated in a conventional manner.

After the boat has been moved out of the danger area, the engine may be turned off by continuing the rotation of the rotatable switch of section **60** in a clockwise direction. This clockwise movement continues until the ball **70** is positioned in the detent C. The slot **90** moves with the switch until the pin **78** contacts the opposite end of the slot. At the same time, opening **92** comes into alignment with the pin **76** and pin **76** is biased by spring **84** into the opening **92**. The switch is then locked in the C or "off" position and cannot be rotated in either direction. The switch **30** must be disassembled and reset to the A "off" position or completely replaced with a new switch. The preignition switch **26**, of course, may be utilized in a conventional manner regardless of the position of the emergency ignition switch **30**.

For convenience and ease of manufacture, the switch **30** may be constructed of plastic-like materials. It is therefore relatively inexpensive and its replacement cost is not objectionable. Ideally, the switch will be encapsulated utilizing any of the various well-known encapsulation techniques to protect the mechanisms from environmental conditions as well as to prevent unauthorized tampering.

In view of the above disclosure, it will be readily apparent to those skilled in the art that the present invention provides a novel blocking and starting circuit for inboard motorboats. The system is also seen to include a novel bypass or emergency ignition switch which allows instant operation of the motor should an emergency condition exist but which will prevent the careless operator from indiscriminately bypassing the starting system. It is also to be noted that the blower is continuously operating wherever the switch is turned on and whenever the engine is running. This prevents build up of fumes within the engine compartment whether the boat is operated at slow trolling speeds, at full speed, or at anchor.

While a preferred embodiment of the invention has been shown and described, it will be apparent that equivalent arrangements can be made which practice the invention. Thus, it is intended that the invention cover the equivalent arrangements unless the following claims by their wording expressly state otherwise.

The embodiments of the invention is which an exclusive property or privilege is claimed are defined as follows:

1. In a motorboat having an engine compartment, an engine, an ignition for said engine, a power supply for said ignition system, and a blower for ventilating said engine compartment, a blocking circuit connected in circuit between said power supply and said ignition system to insure operation of said blower for a predetermined time prior to operation of said engine comprising: a time-delay relay having a coil and a pair of normally opened contact elements; an air switch having a pair of normally opened contact elements positioned adjacent the outlet end of said blower, said air switch responsive to the operation of said blower to thereby close said contacts; first circuit means connecting said power supply to said blower, to one of said contacts on said air switch, and to one of said contacts on said time-delay relay; second circuit means connecting the other of said contacts on said air switch to said coil of said time-delay relay; and third circuit means connecting the other of said contacts on said time-delay relay to said ignition circuit; whereby operation of said blower closes said air switch connecting said first circuit to said second circuit thereby connecting said time-delay relay coil to said power supply, said time-delay relay contacts remaining in a normally opened position a predetermined time after such connection whereupon said contacts close connecting said first circuit means to said third circuit means thereby connecting said power supply to said ignition system.

2. An ignition blocking circuit as described in claim **1** and further comprising: fourth circuit means connected in parallel with said first, second, and third circuit means between said power supply and said ignition system; and normally opened switch means connected in series with said fourth circuit means.

3. The ignition blocking circuit as described in claim **2** wherein said normally opened switch means comprises: a fixed contact terminal and a movable contact terminal said movable contact terminal movable from a first normally opened position to a second closed position and thence to a third open position; and means in said switch to prevent movement of said movable contact terminal from said second position to said first position and from said third position to said second position.

4. The ignition blocking circuit as described in claim **2** wherein said switch means further comprises: a supporting section having a fixed contact terminal mounted thereon; a movable section having a movable contact terminal fixed thereon, said supporting section and said movable section being relatively rotatable with respect to each other; pin means in said supporting section; means biasing said pin means in said supporting section toward said movable section; and means in said movable section to receive said biased pin means as said movable section is rotated with respect to said support section to prevent counterrotation thereof.

5. An apparatus as described in claim **4** and further including locking means in said supporting section cooperable with said movable section to prevent relative movement therebetween when said movable section has been moved to said third position.

6. An apparatus as defined in claim **5** wherein said locking means comprises pin means in said supporting section and; biasing means for said pin means urging said pin means toward said movable section, said movable section having an opening therein adapted to receive said pin means when said movable section is moved to said third position.

* * * * *