July 22, 1924. 1,502,417

K. ARNSTEIN

WIRE AND ROPE CLAMP

Filed Oct. 23, 1922

Fig. 1.

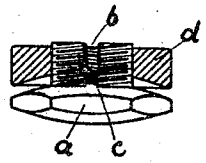

Fig. 2.

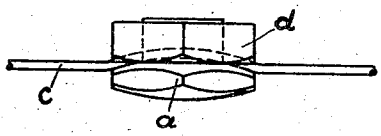

Fig. 3.

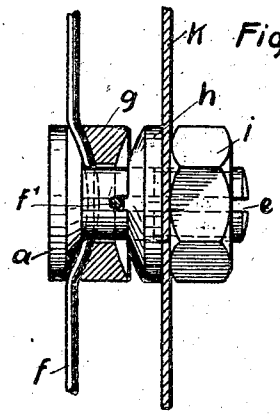

Fig. 4.

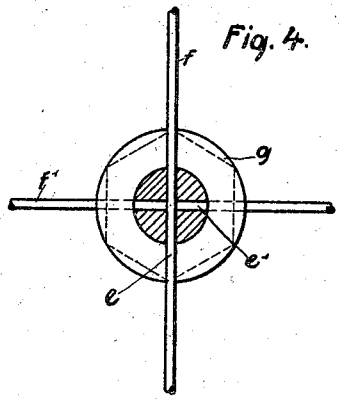

Fig. 5.

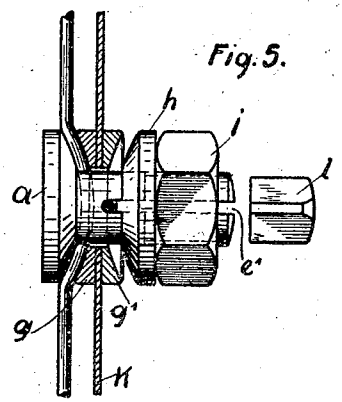

Inventor:
Karl Arnstein

Patented July 22, 1924. 1,502,417

UNITED STATES PATENT OFFICE.

KARL ARNSTEIN, OF FRIEDRICHSHAFEN-ON-THE-BODENSEE, GERMANY, ASSIGNOR TO THE FIRM: LUFTSCHIFFBAU ZEPPELIN, GESELLSCHAFT MIT BESCHRÄNKTER HAFTUNG, OF FRIEDRICHSHAFEN-ON-THE-BODENSEE, GERMANY.

WIRE AND ROPE CLAMP.

Application filed October 23, 1922. Serial No. 596,488.

To all whom it may concern:

Be it known that I, KARL ARNSTEIN, a citizen of Czechoslovakia, residing at Friedrichshafen-on-the-Bodensee, Germany, have invented certain new and useful Improvements in Wire and Rope Clamps, for which I have filed an application in Germany October 21, 1921. and of which the following is a specification.

My invention has reference to clamping means for wires, wire ropes and the like, and it particularly provides for the passing of the wires or ropes substantially or approximately or exactly through the median line of the coupling. In accordance with my invention the wire or rope to be tightened or the wires or ropes to be intersectingly connected or coupled with each other or with other parts are passed between concave and convex spherical clamping surfaces so as to be deflected, and in such a manner that the wires or ropes are fully applied against the convex spherical surface, while upon the concave spherical clamping surface they are only supported upon the edges of the clamping surfaces, and remain freely exposed in the middle thereof.

The clamping device according to my invention offers the advantage that owing to the central arrangement of the screw shaft and to the wires or the like extending through the central portion of the clamping members the wires are held fast along an extended clamping surface at the same time allowing of employing a screw shaft of large section.

In the drawing is shown by way of example several forms of clamping means embodying my invention. Figs. 1 and 2 are respectively a central vertical section and a side elevation of one form of clamping device embodying my invention. Fig. 3 is an elevation, partly in section, of another form of clamping device embodying my invention. Fig. 4 is a detail cross-sectional view. Fig. 5 is an elevation of the form of device shown in Fig. 3 but slightly modified.

Referring to the drawings, the clamping device shown in Figures 1 and 2 consists of a head screw *a* the underside of which facing the shaft is convex. The shaft is provided with an axial slot *b* extending in the median line of the shaft down to the convex surface of the head, and the basis of which constitutes the extension of the concave surface of the head which is intended for the reception of the wire or rope *c* to be fastened. The wire *c* is secured in position by means of the nut *d* which is concaved upon the surface confronting the head *a*.

The modification disclosed in Figures 3 and 4 comprises a head screw *a* similar to that shown in Figure 1. However in this form of the invention the shaft of the screw is provided with two intersectingly arranged slots *e e'* crossing each other at an angle in different planes which angle depends upon the angle of intersection of the wires, one of the slots extending down to the convex spherical surface of the head and constituting, so to speak, the continuation of this surface through the shaft. There is also mounted upon the shaft a biconcave intermediate member *g* and an additional member *h* which is provided with a convex spherical surface opposite one of the concave spherical surfaces of the intermediate member *g*. One of the wires *f* is passed between the head of the screw and the adjacent concave spherical surface of the intermediate piece *g* through the deeper slot, *e*, while the other wire *f'* is passed between the other concave spherical surface of the intermediate member *g* and the convex spherical surface of the intermediate member *h* through the other slot, *e'* in the shaft of the screw. All the parts are then tightly pressed against each other by the nut *i* in such a manner that the metal plate *k* upon which the clamping device is to be mounted, is interposed between the nut *i* and the intermediate member *h*.

In order to prevent the entire weight of the clamping device to be placed upon one side only of the fastening or supporting metal plate, and with a view to distributing the strains on both sides of the plate, the bi-concave intermediate member *g*, as shown in Figure 5 of the drawing, may be split up into two plane-concave sections g^1, g^2 between which the metal plate *k* is arranged.

Means are provided in this connection for inserting a filling member *l* into the cross-shaped free space produced by the slotting

of the stem, after the wires or the like have been inserted and the coupling members have been assembled.

I claim:—

1. A clamping device for wires and the like, comprising a member having a surface of convex spherical curvature adapted to have a wire or the like pass over it in any direction; a second member having a surface of concave spherical curvature adapted to press said wire or the like against said first member; and means for forcing said members and surfaces toward each other, the said surfaces thereby deflecting and clamping said wire or the like.

2. A clamping device for wires and the like comprising a member having a surface of convex spherical curvature adapted to have a wire or the like pass over it in any direction; a second member having a surface of concave spherical curvature adapted to press said wire or the like against said first member; a screw having a longitudinal slot passing through its stem and a nut fitting thereon for forcing said members and surfaces toward each other, the said surfaces thereby deflecting and clamping said wire or the like.

3. A clamping device for wires and the like, comprising a head screw the head of which is provided with a surface of convex spherical curvature adapted to have a wire or the like pass over it in any direction; a member having a surface of concave spherical curvature adapted to press said wire or the like against said head of the screw; and a nut for forcing the member against the head, the said surfaces thereby deflecting and clamping said wire or the like.

4. A clamping device for wires and the like, comprising a member having a surface of convex spherical curvature adapted to have a wire or the like pass over it in any direction; a second member having a surface of convex spherical curvature adapted to have a wire or the like pass over it in any direction; a third member arranged between said other two members having two surfaces, each of concave spherical curvature adapted to press said wires or the like against said first two members; and means for forcing said members and surfaces together, the said surfaces thereby deflecting and clamping said wires or the like.

5. A clamping device for wires and the like, comprising a member having a surface of convex spherical curvature adapted to have a wire or the like pass over it in any direction; a second member having a surface of convex spherical curvature adapted to have a wire or the like pass over it in any direction; a third member arranged between said other two members having two surfaces, each of concave spherical curvature adapted to press said wire or the like against said first two members; and means comprising a screw the stem of which has two intersecting slots for forcing said members and surfaces together, the said surfaces thereby deflecting and clamping said wires or the like.

In testimony whereof I affix my signature.

KARL ARNSTEIN.