(19) Europäisches Patentamt
European Patent Office
Office européen des brevets

(11) Publication number: **0 496 987 B1**

(12) EUROPEAN PATENT SPECIFICATION

(45) Date of publication of patent specification: **31.05.95**

(51) Int. Cl.6: **B41J 13/00**

(21) Application number: **91121369.2**

(22) Date of filing: **12.12.91**

(54) Feeding and delivery structure for cutform media in printer.

(30) Priority: **29.01.91 JP 8973/91**

(43) Date of publication of application:
05.08.92 Bulletin 92/32

(45) Publication of the grant of the patent:
31.05.95 Bulletin 95/22

(84) Designated Contracting States:
CH DE FR GB IT LI NL

(56) References cited:
EP-A- 0 294 055
GB-A- 2 151 554
JP-A- 2 286 269
US-A- 4 747 718

(73) Proprietor: **SEIKO EPSON CORPORATION**
4-1, Nishishinjuku 2-chome
Shinjuku-ku
Tokyo (JP)

(72) Inventor: **Ishida, Hiroshi**
c/o Seiko Epson Corp.,
No. 3-5, Owa 3-chome
Suwa-shi,
Nagano (JP)

(74) Representative: **Diehl, Hermann O. Th., Dr. et al**
Diehl & Glaeser, Hiltl & Partner
Patentanwälte
Postfach 19 03 65
D-80603 München (DE)

Note: Within nine months from the publication of the mention of the grant of the European patent, any person may give notice to the European Patent Office of opposition to the European patent granted. Notice of opposition shall be filed in a written reasoned statement. It shall not be deemed to have been filed until the opposition fee has been paid (Art. 99(1) European patent convention).

EP 0 496 987 B1

Description

The present invention relates to a feeding and delivery structure for a cutform medium (e.g., a single sheet or film) for use with a printer having an automatic feeder for cutform media.

Document JP-A-2 286 269 shows an adjustable sheet guide for feeding recording media of various sizes to a printer. A switch is included in the feeder to detect when postcard size media are used.

Another conventional device, disclosed in Japanese Examined Patent Publication No. 63-53091 and as shown in Fig. 4 of the present application, has a cutform medium fed by an automatic feeder 101 disposed upstream of a platen 105, and conveyed by the platen and pressing rollers 106, 107. The cutform medium is printed by a printing head 108 opposed to the platen 105, delivered upwardly by delivery rollers 109, 110 and stored in a stacker 111. Such a printer is suitable for successive (e.g., continuous) processing of cutform media. However, when a single cutform medium different from those stored in the automatic feeder 101 is to be processed, the processing and handling thereof is troublesome. To eliminate this inconvenience, a sheet passage 112 for manual feeding and a manual feed guide 102 have been provided.

However, in the conventional feeding and delivery structure, the manual feed guide 102 for the cutform medium also serves as a rear face of the stacker adapted to store the cutform medium having been printed by the print head 108, and is located on the same plane as the printed cutform medium. Thus, a problem arises in that, if the cutform medium has a tendency to roll-up, a tip 104a of the cutform medium is rolled into the sheet passage 112 due to a rear or trailing end of the cutform medium remaining in the sheet passage.

Another problem in the conventional feeding and delivery structure is that the surface of the delivered cutform medium 104 is brought into contact with the rear face of the stacker. Therefore, when the cutform medium is electrostatically charged in a low humidity environment, the attraction of the cutform medium 104 to the stacker face increases. Hence, a comparatively thin cutform medium is buckled due to a force couple generated by the conveying force of the delivery rollers 109, 110 (e.g., indicated by arrow a in Figure 4) and the carrying load on the rear face of the stacker (e.g., as indicated by arrow b), and cannot be properly conveyed by the delivery roller 109.

An object of the present invention is to solve the above-mentioned problems of the conventional device, and to provide a feeding and delivery structure for a cutform medium which enables the cutform medium to be safely and reliably delivered without being rolled into a sheet passage, even if it has a tendency to roll-up during its conveyance.

This object is solved by the feeding and delivery structure of independent claim 1. Further advantageous features, aspects and details of the structure are evident from the dependent claims, the description and the drawings.

Another aspect of the present invention is to provide a feeding and delivery structure for a cutform medium which enables a comparatively thin cutform medium to be delivered reliably.

According to the invention, a feeding and delivery structure for a cutform medium in a printer, in which an automatic feeder for cutform media is disposed at a rear portion of a platen, includes delivery rollers disposed at upper portions of the platen, a stacker bottom face member provided at a rear portion of the delivery rollers and forming a stacker for storing delivered cutform media, and guide members slideably attached in the horizontal printing direction to front faces of guide plates provided at the front of the automatic feeder. The guide members guide the side edges and the front face of a manually fed cutform medium and have front faces forming a rear face of the stacker. The guide members may also have ribs formed on their front faces.

Fig. 1 is a sectional view of a feeding and delivery structure for a cutform medium according to a first embodiment of the present invention.

Fig. 2 is a partial perspective view of the feeding and delivery structure for a cutform medium of the first embodiment of the present invention.

Fig. 3 is a sectional view of a second embodiment of the present invention.

Fig. 4 is a sectional view of a conventional feeding and delivery structure for a cutform medium.

In Figs. 1 and 2, a cutform medium 4 fed by an automatic feeder 1 is conveyed by a platen 5 and pressing rollers 6, 7. Thereafter, the cutform medium 14 is printed by a printing head 8 opposed to the platen 5, passes between delivery rollers 9, 10 located above (e.g., upstream) the platen, and is delivered along front faces 3a of guide members 3 and stored in a stacker formed by a bottom face member 11 and the front faces 3a of the guide members. The bottom face member is secured at one end to a shaft supporting delivery roller 9.

The guide members (3) are slideably supported by guide plates 2 as evident from Figure 2 in a direction S perpendicular to the feed direction of the cutform medium 4 in order to allow adjustment to cutform media 4 of different width. The guide members 3 thus provide adjustable opposite U-type channels facing one another for delivering the manually fed cutform medium 4 to the printer. These channels preferably end below and behind the upper end of the bottom face member 11

which together with the free parts of the front faces 3a of the guide members 3 form the stacker for the printed cutform medium 4, as shown in detail in Figure 2.

When a cutform medium 4 different from that stored in the automatic feeder 1 is to be printed, the cutform medium 4 is manually fed, with its side edges and its front face being guided by the guide members 3 and front faces 2a of guide plates 2 disposed in front of the automatic feeder 1. The cutform medium 4 is guided to a normal position by guiding its edges. Similarly to when the cutform medium 4 is fed by the automatic feeder 1, it is subsequently carried and conveyed by the platen 5 and the pressing rollers 6, 7.

After the cutform medium is printed by the printing head 8, it passes between the delivery rollers 9, 10 located upstream of the platen 5 and is delivered along the front face portions 3a of the guide members. Even if the cutform medium 4 has a tendency to roll up due to its conveyance by the platen 5, since a sheet feed passage is separated from a sheet delivery passage by the guide members 3, an upper end 4a of the delivered cutform medium is prevented from rolling into the sheet feed passage again because of a cutform medium 4 remaining in the sheet feed passage. Thus, the delivered cutform medium can be stored reliably and easily in the stacker formed by the stacker bottom face member 11 and the front face portions 3a of the guide members.

Another embodiment of the invention, as shown in Fig. 3, illustrates a feeding and delivery structure for a cutform medium in which ribs 12 are formed on the front faces 3a of the guide members 3. As a result, after the cutform medium 4 passes between the delivery rollers 9, 10, the attraction of the cutform medium 4 carried along the guide members 3 to the stacker face is reduced since the frictional and electrostatic forces created (e.g., in a low humidity environment) are reduced. Thus, even in a low humidity environment, a comparatively thin cutform medium may be employed as compared to that of the conventional system, and a stable sheet feed operation may be performed.

According to the feeding and delivery structure for a cutform medium of the present invention, a manual sheet feed passage and a sheet delivery passage of the cutform medium are separated by guide members for guiding the edges and front face of the cutform medium, so that the cutform medium is prevented from rolling into the feed passage during the manual feeding thereof.

Furthermore, since the ribs are formed on the front faces of the guide members, a thinner cutform medium can be reliably delivered.

Claims

1. A feeding and delivery structure for a printer (8) having a platen (5) and having an automatic feeder (1) for cutform media (4) disposed upstream of said platen, said structure, comprising:
rollers (9,10) disposed adjacent to said platen (5) for conveying said cutform medium (4);
a stacker for storing delivered cutform media, said stacker including a bottom face member (11) disposed downstream of said rollers (9,10);
guide plates (2) having front faces (2a) positioned adjacent to said automatic feeder; and
guide members (3) that are attached to said guide plate faces (2a), said guide members being slideable in a direction (S) normal to a conveyance direction of said cutform medium (4), said guide members (3) guiding a manually fed cutform medium (4) and having front faces (3a) forming a surface of said stacker, said guide members defining a sheet feed passage and a sheet delivery passage, wherein said guide members (3) separate said sheet feed passage from said sheet delivery passage and thereby prevent a delivered cutform medium from rolling into said sheet feed passage.

2. A feeding and delivery structure for a cutform medium according to claim 1, further comprising ribs (12) formed on said guide members (3).

3. A feeding and delivery structure according to claim 1 or 2 wherein said rollers (9,10) are disposed downstream of said platen (5).

4. A feeding and delivery structure according to one of the preceding claims wherein said rollers comprise delivery rollers (9,10).

5. A feeding and delivery structure according to one of claims 2 to 4, wherein said ribs (12) are formed on said front faces (3a) of said guide members (3) said ribs (12) reducing an attraction of said cutform medium (4) to said stacker after said cutform medium is conveyed by said rollers (9,10).

6. A feeding and delivery structure for a cutform medium according to one of the preceding claims, wherein said bottom face member (11) has an angular shape, said bottom face member (11) being positioned adjacent to said feeder.

Patentansprüche

1. Zuführungs- und Abgabestruktur für einen Drucker (8) mit einer Walze (5) und einer automatischen Zuführung (1) für Einzelblätter (4), die vor der Walze angeordnet ist, wobei die Struktur folgendes umfaßt:

   Walzen (9, 10), die angrenzend an die Walze (5) zur Beförderung des Einzelblattes (4) angeordnet sind;

   eine Stapelvorrichtung zur Aufnahme abgegebener Einzelblätter, wobei die Stapelvorrichtung ein Unterseitenelement (11) enthält, das nach den Walzen (9, 10) angeordnet ist;

   Führungsplatten (2), deren Vorderseiten (2a) angrenzend an die automatische Zuführung angeordnet sind; und

   Führungselemente (3), die an den Führungsplattenseiten (2a) befestigt sind, wobei die Führungselemente in eine Richtung (S) senkrecht zu einer Beförderungsrichtung des Einzelblattes (4) verschiebbar sind, wobei die Führungselemente (3) ein manuell zugeführtes Einzelblatt (4) führen und Vorderseiten (3a) aufweisen, die eine Oberfläche der Stapelvorrichtung bilden, wobei die Führungselemente einen Blattzuführungsweg und einen Blattabgabeweg definieren, wobei die Führungselemente (3) den Blattzuführungsweg von dem Blattabgabeweg trennen und somit verhindern, daß sich ein abgegebenes Einzelblatt in den Blattzuführungsweg rollt.

2. Zuführungs- und Abgabestruktur für ein Einzelblatt nach Anspruch 1, welches ferner Rippen (12) umfaßt, die an den Führungselementen (3) ausgebildet sind.

3. Zuführungs- und Abgabestruktur nach Anspruch 1 oder 2, wobei die Walzen (9, 10) nach der Walze (5) angeordnet sind.

4. Zuführungs- und Abgabestruktur nach einem der vorangehenden Ansprüche, wobei die Walzen Abgabewalzen (9, 10) umfassen.

5. Zuführungs- und Abgabestruktur nach einem der Ansprüche 2 bis 4, wobei die Rippen (12) an den Vorderseiten (3a) der Führungselemente (3) ausgebildet sind, wobei die Rippen (12) ein Anziehen des Einzelblattes (4) an die Stapelvorrichtung verringern, nachdem das Einzelblatt von den Walzen (9, 10) befördert wurde.

6. Zuführungs- und Abgabestruktur für ein Einzelblatt nach einem der vorangehenden Ansprüche, wobei das Unterseitenelement (11) eine winkelige Form aufweist, wobei das Unterseitenelement (11) angrenzend an die Zuführung angeordnet ist.

Revendications

1. Structure d'alimentation et de délivrance pour une imprimante (8) comportant un cylindre d'impression (5) et un dispositif d'alimentation automatique (1) pour des supports d'impression découpés (4) disposés en amont dudit cylindre d'impression, ladite structure comprenant :

   des rouleaux (9, 10) disposés de manière à être adjacents audit cylindre d'impression (5) pour convoyer ledit support d'impression découpé (4) ;

   un dispositif d'empilement pour stocker des supports d'impression découpés délivrés, ledit dispositif d'empilement incluant un élément de face de fond (11) disposé en aval desdits rouleaux (9, 10) ;

   des plaques de guidage (2) comportant des faces avant (2a) positionnées de manière à être adjacentes audit dispositif d'alimentation automatique ; et

   des eléments de guidage (3) qui sont fixés auxdites faces de plaque de guidage (2a), lesdits éléments de guidage pouvant coulisser suivant une direction (S) normale à une direction de convoyage dudit support d'impression découpé (4), lesdits éléments de guidage (3) guidant un support d'impression découpé alimenté manuellement (4) et comportant des faces avant (3a) formant une surface dudit dispositif d'empilement, lesdits éléments de guidage définissant un passage d'alimentation en feuille et un passage de délivrance de feuille, dans laquelle lesdits éléments de guidage (3) séparent ledit passage d'alimentation en feuille dudit passage de délivrance de feuille et empêchent ainsi qu'un support d'impression découpe délivré ne soit amené par roulement dans ledit passage d'alimentation en feuille.

2. Structure d'alimentation et de délivrance pour un support d'impression découpé selon la revendication 1, comprenant en outre des nervures (12) formées sur lesdits éléments de guidage (3).

3. Structure d'alimentation et de délivrance selon la revendication 1 ou 2, dans laquelle lesdits rouleaux (9, 10) sont disposés en aval dudit cylindre d'impression (5).

4. Structure d'alimentation et de délivrance selon l'une quelconque des revendications précéden-

tes, dans laquelle lesdits rouleaux comprennent des rouleaux de délivrance (9, 10).

5. Structure d'alimentation et de délivrance selon l'une quelconque des revendications 2 à 4, dans laquelle lesdites nervures (12) sont formées sur lesdites faces avant (3a) desdits éléments de guidage (3), lesdites nervures (12) réduisant l'attraction dudit support d'impression découpé (4) par rapport audit dispositif d'empilement après que ledit support est convoyé par lesdits rouleaux (9, 10).

6. Structure d'alimentation et de délivrance pour un support d'impression découpé selon l'une quelconque des revendications précédentes, dans laquelle l'élément de face de fond (11) présente une forme angulaire, ledit élément de face de fond (11) étant positionné de manière à être adjacent audit dispositif d'alimentation.

FIG. 1

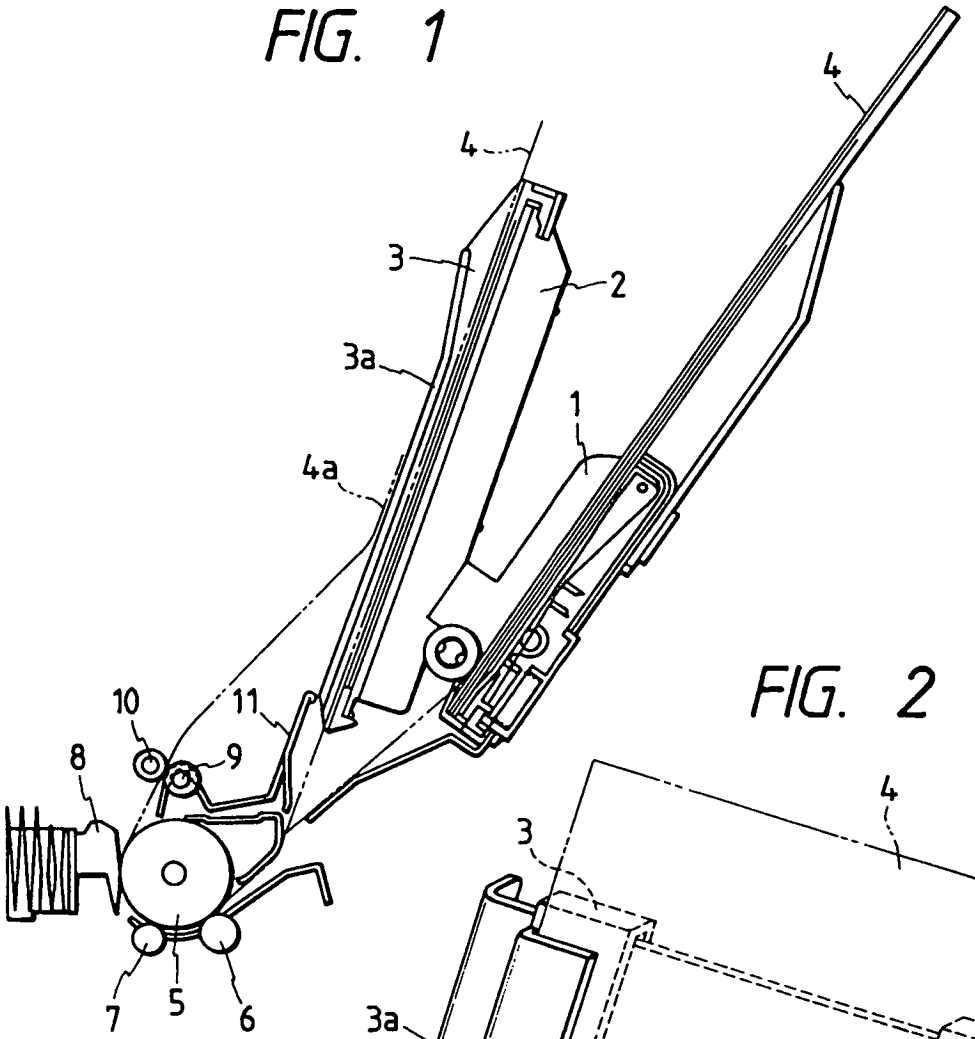

FIG. 2

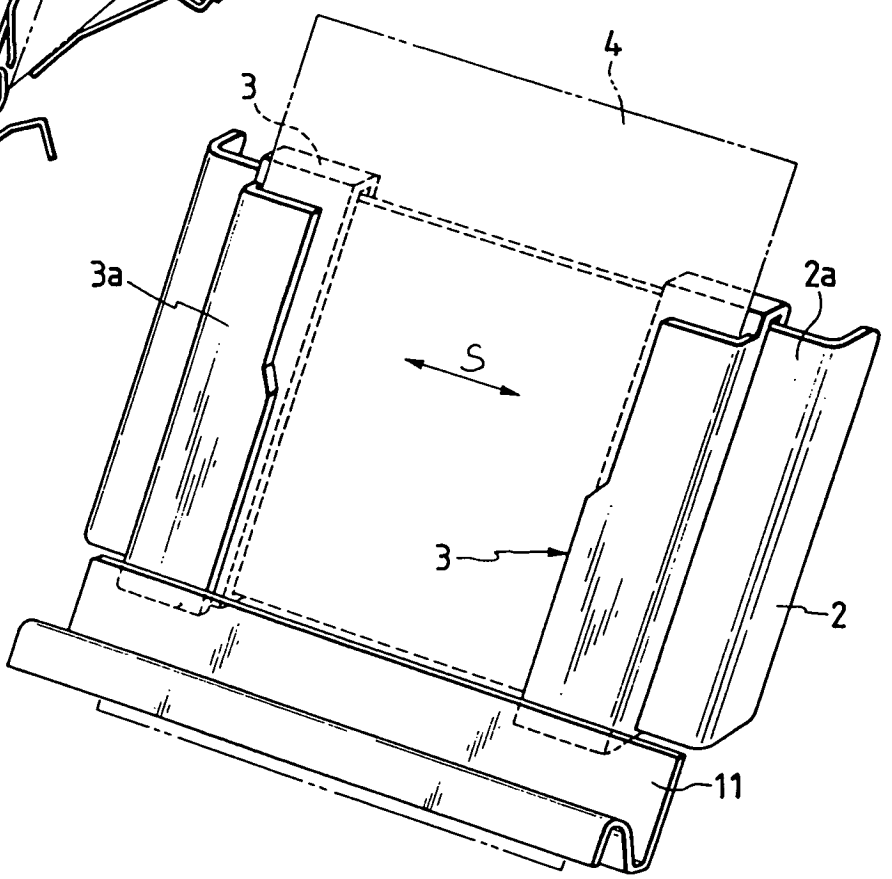

FIG. 3

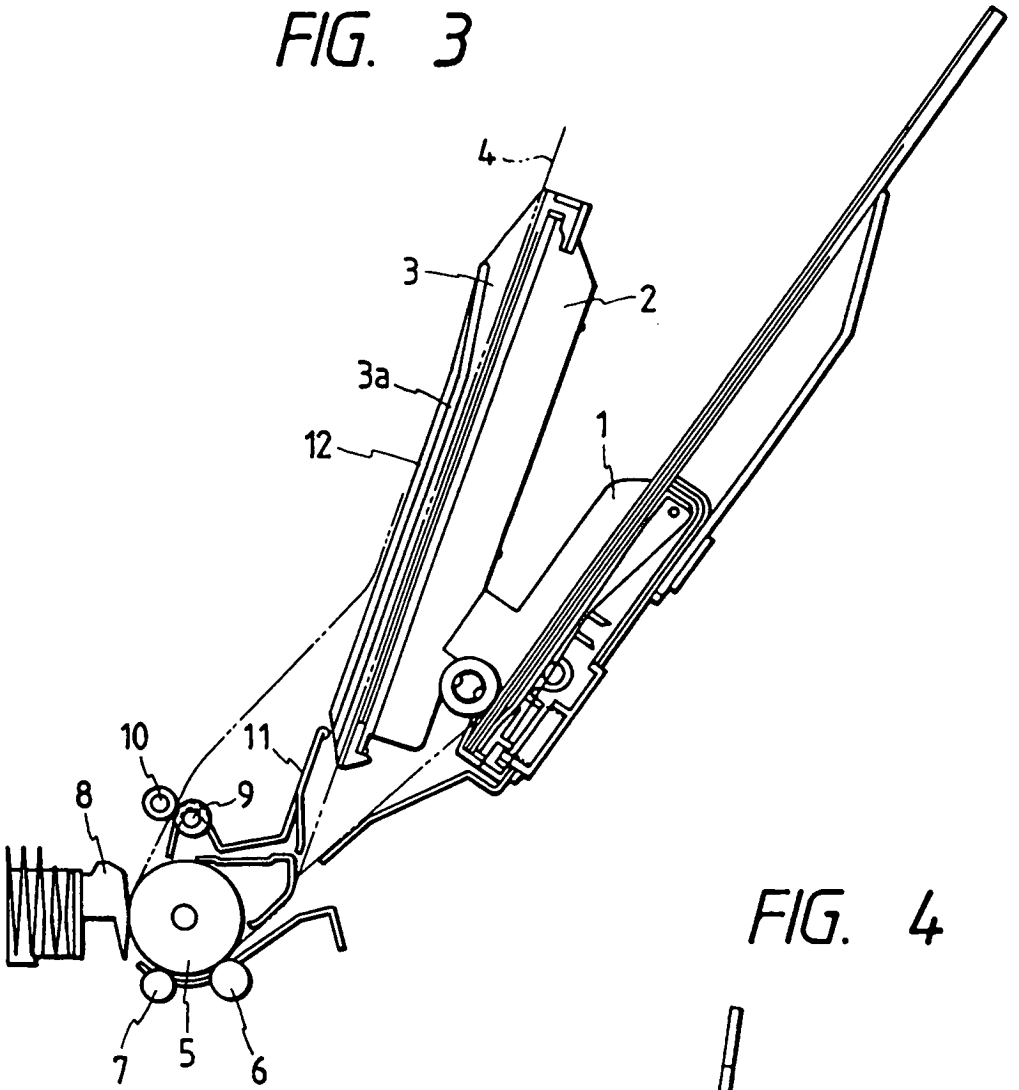
4
3
2
3a
12
1
10
11
8
9
7
5
6

FIG. 4

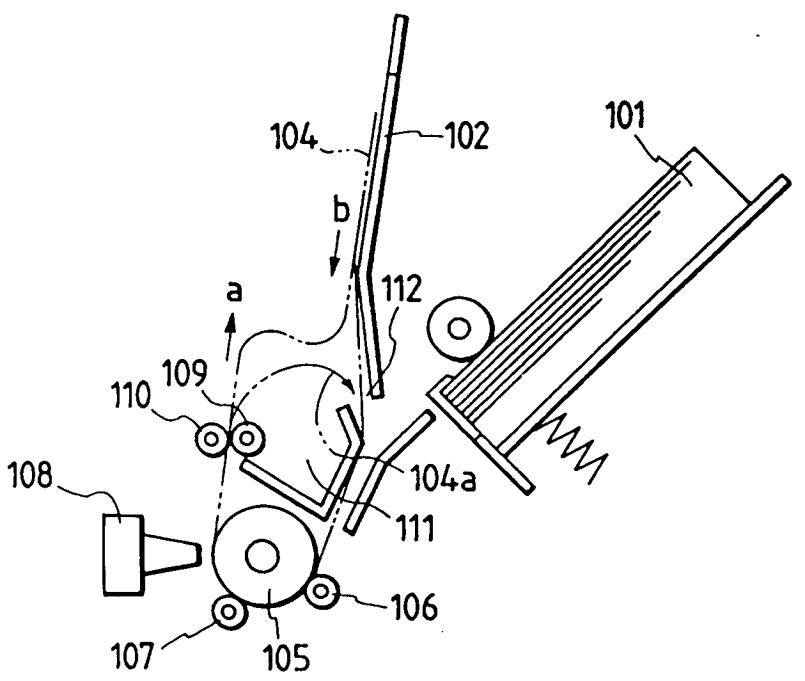
104
102
101
b
a
112
109
110
108
104a
111
106
107
105

REGISTER ENTRY FOR EP0496987

European Application No EP91121369.2 filing date 12.12.1991

Priority claimed:
29.01.1991 in Japan - doc: 66008973

Designated States CH DE FR GB IT LI NL

Title FEEDING AND DELIVERY STRUCTURE FOR CUTFORM MEDIA IN PRINTER.

Applicant/Proprietor
SEIKO EPSON CORPORATION, 4-1, Nishishinjuku 2-chome, Shinjuku-ku Tokyo, Japan [ADP No. 50309772002]

Inventor
HIROSHI ISHIDA, c/o Seiko Epson Corp., No. 3-5, Owa 3-chome, Suwa-shi, Nagano, Japan [ADP No. 59972299001]

Classified to
B41J

Address for Service
J MILLER & CO, 34 Bedford Row, Holborn, LONDON, WC1R 4JH, United Kingdom [ADP No. 00001149002]

EPO Representative
HERMANN DR. DIEHL, Diehl & Glaeser, Hiltl & Partner Flüggenstrasse 13, W-8000 München 19, Federal Republic of Germany [ADP No. 50100783001]

Publication No EP0496987 dated 05.08.1992
Publication in English

Examination requested 14.07.1992

Patent Granted with effect from 31.05.1995 (Section 25(1)) with title FEEDING AND DELIVERY STRUCTURE FOR CUTFORM MEDIA IN PRINTER.

08.07.1994 Notification from EPO of change of Applicant/Proprietor details
from
SEIKO EPSON CORPORATION, 4-1, Nishishinjuku 2-chome, Shinjuku-ku Tokyo, Japan [ADP No. 50309772002]
to
SEIKO EPSON CORPORATION, 4-1, Nishishinjuku 2-chome, Shinjuku-ku Tokyo, Japan [ADP No. 50309772003]
Entry Type 25.14 Staff ID. RD06 Auth ID. EPT

24.03.1995 J MILLER & CO, 34 Bedford Row, Holborn, LONDON, WC1R 4JH, United Kingdom [ADP No. 00001149002]
registered as address for service
Entry Type 8.11 Staff ID. DD1 Auth ID. AA

28.04.1995 Notification from EPO of change of EPO Representative details from HERMANN DR. DIEHL, Diehl & Glaeser, Hiltl & Partner Flüggenstrasse 13, W-8000 München 19, Federal Republic of Germany
[ADP No. 50100783001]

to
DR. HERMANN O. TH. DIEHL, Diehl & Glaeser, Hiltl & Partner, Patentanwälte, Postfach 19 03 65, D-80603 München, Federal Republic of Germany
[ADP No. 50100783001]
Entry Type 25.14 Staff ID. RD06 Auth ID. EPT

**** END OF REGISTER ENTRY ****

RENEWAL DETAILS

PUBLICATION NUMBER EP0496987

PROPRIETOR(S)

SEIKO EPSON CORPORATION, 4-1, Nishishinjuku 2-chome, Shinjuku-ku
Tokyo, Japan

DATE FILED 12.12.1991

DATE GRANTED 31.05.1995

DATE NEXT RENEWAL DUE 12.12.1995

DATE NOT IN FORCE

DATE OF LAST RENEWAL

YEAR OF LAST RENEWAL 00

STATUS PATENT IN FORCE

**** END OF REPORT ****