May 31, 1932. A. BARÉNYI 1,861,256

PHOTOGRAPHIC SHUTTER

Filed July 30, 1930

Fig. 1

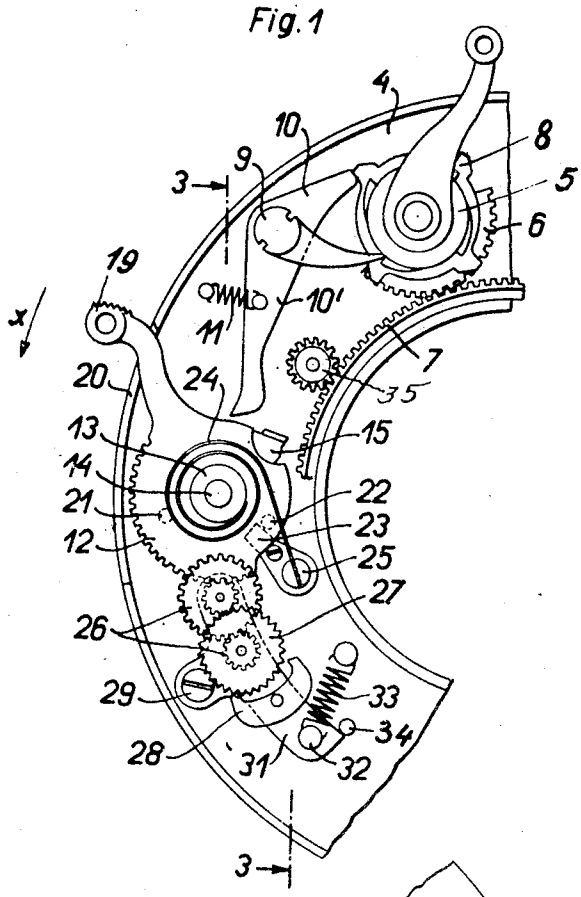

Fig. 3

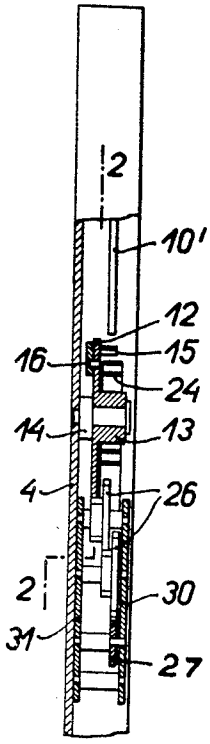

Fig. 2

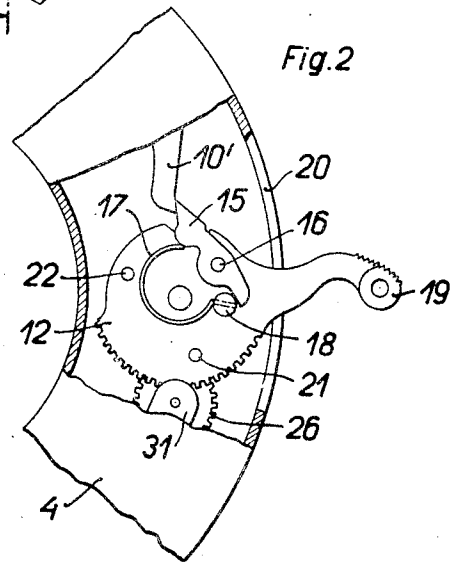

Inventor

Árpád Barényi

by Franz Reinhold.

Attorney

Patented May 31, 1932

1,861,256

UNITED STATES PATENT OFFICE

ÁRPÁD BARÉNYI, OF BERLIN-LICHTERFELDE, GERMANY

PHOTOGRAPHIC SHUTTER

Application filed July 30, 1930, Serial No. 471,704, and in Germany August 7, 1929.

My invention relates to improvements in photographic shutters, and more particularly in the actuating mechanism for the blade mechanism. In constructions now in use the said actuating mechanism comprises a spring driven motor or master member which when set and released opens and closes the blade mechanism. Actuating mechanisms of this type have been provided with a detent mechanism for withholding the same in set position and releasing the same, and the said detent mechanism has been provided with a retarding device whereby the actuating mechanism is released a certain length of time after operating the detent mechanism. The object of the improvements is to construct the said retarding device so that it is automatically thrown out of operation when setting the detent mechanism, and that it is automatically thrown into operation when releasing the detent mechanism, so that the detent mechanism may be set without operating the retarding device and at high velocity. With this object in view my invention consists in mounting the retarding device on a frame which is movable relatively to the detent mechanism for automatically disconnecting the retarding device from the detent mechanism when operating the detent mechanism and throwing the same into engagement therewith when releasing the same.

For the purpose of explaining the invention an example embodying the same has been shown in the accompanying drawings in which the same reference characters have been used in all the views to indicate corresponding parts. In said drawings—

Fig. 1 is a front fragmentary elevation of the shutter with the cover of the shutter casing removed,

Fig. 2 is a sectional rear elevation on the line 2—2 of Fig. 3, and

Fig. 3 is a sectional elevation taken on the line 3—3 of Fig. 1.

In the example shown in the figures the shutter is of the modern type of pivoted blade, symmetrical opening shutter an example of which has been shown and described in my copending application Ser. No. 376,518 filed July 8, 1929, and it comprises a casing 4 having a spring driven motor or master member 5 mounted therein, the said member being provided with a gear segment 6 adapted to operate a toothed ring 7 concentrically mounted on the casing 4 and in driving engagement with pinions 35 secured to the shutter blades. The member 5 is provided with lugs 8 adapted to be engaged by a detent 10 rockingly mounted on the casing 4 at 9 and terminating in a release lever 10′, a spring 11 tending to hold the said detent in position for engagement with the lugs 8.

The detent 10 is adapted to be released by a releasing mechanism comprising a gear segment 12 formed with a hub 13 and rockingly mounted on a pivot bolt 14 fixed to the casing 4. The said segment carries a pawl 15 rockingly mounted on a pivot bolt 16, and a spring 17 fixed to a pin 18 normally holds the pawl in the position shown in Fig. 2 and with its tail end bearing on the pin 18. The segment 12 is made integral with an arm 19 passed through a slot 20 of the circumferential wall of the casing 4. When rocking the segment 12 by means of the arm 19 in the direction of the arrow x the pawl 15 passing the lever 10′ yields inwardly and thereafter it is pressed outwardly again by the spring 17. The rocking movement of the segment 12 is limited by pins 21 and 22 cooperating with a stop member 23 fixed to the casing 4. To the hub 13 a spiral spring 24 is secured, which is secured with its opposite end to a pin 25, the said spring tending to return the segment 12 into the position shown in Fig. 1.

The segment 12 is connected with a retarding device comprising a set of gear wheels 26, a star wheel 27 and a pallet or anchor 28. The said retarding device is mounted on a frame rockingly mounted on a pivot bolt 29 and comprising plates 30 and 31 connected with each other by stay bolts 32, a spring 33 being provided for yieldingly holding the frame in the position shown in Fig. 1 and in engagement with a stop 34, in which position the first gear wheel is in mesh with the gear segment 12.

The operation of the apparatus is as follows:

After the motor or master member 5 has been set it is temporarily locked in position by the detent 10 engaging one of the lugs 8. If it is desired to make an exposure the gear segment 12 is rocked by means of the arm 19 in the direction of the arrow x until its pin 21 engages the stop member 23, and when thus rocking the gear segment the pawl 15 passing the lever 10′ yields inwardly. At the beginning of the rocking movement of the segment 12 the frame 30, 31 is rocked in clockwise direction against the tension of the spring 33 so that the train of gear wheels 26 gets out of mesh with the segment 12, and the said segment may be rapidly rocked without the train of gear wheels taking parts in such operation. When releasing the arm 19 the train of gear wheels 26 is immediately thrown by the spring 33 into engagement with the gear segment 12 which is therefore retarded. After a certain length of time depending on the resistance of the train of gear wheels 26 and the pallet 28 the pawl 15 engages the lever 10′ and rocks the same anticlockwise and with the detent 10 out of locking engagement with the lug 8, and immediately thereafter the detent is released by the pawl 15 and rocked by the spring 11 into position for engagement with the next lug 8. In the meantime the master member 5 has begun its movement for operating the blade mechanism and it is arrested by the detent 10 engaging the next lug 8.

From the foregoing description of the detent mechanism it will be understood that when setting the segment 12 the train of gear wheels 26 is thrown into and out of operation and that no mechanism such as a pawl and means for operating the same are needed.

I claim:

1. In a photographic shutter the combination, with a shutter-operating motor and a motor-releasing detent, of a manually rotatable member equipped with a detent-engaging pawl, a spring engaging said member and adapted to be put under tension by manual rotation of said member and, when under tension, to rotate said member oppositely, and means for retarding spring-impelled rotation of said member, such means including a pinion structurally united with said rotatable member and a gear-wheel which, in addition to its essential property of rotatability, is movable bodily with respect to said pinion between positions of meshing and release with respect thereto.

2. The structure of claim 1, the said gear-wheel being movable from meshing to release position by such manual rotation of said pinion.

3. The structure of claim 1 together with a spring engaging said gear-wheel and tending to maintain said gear-wheel in meshing position.

4. In a photographic shutter the combination of a casing, a shutter-operating motor mounted in said casing, a motor-releasing detent mounted in said casing, a detent swinging member rotatably mounted in said casing, a spring engaging the last-named member, adapted to be put under tension by manual rotation of said last-named member and when under tension to rotate said member oppositely, and means for retarding spring-impelled rotation of said member, such means including a pinion structurally united with said member, a frame pivotally mounted in said casing, and a gear-wheel rotatably borne by said frame, the said frame being movable on its pivot between positions of gear-wheel meshing and gear-wheel release with respect to said pinion, and the said frame movable between such positions on the rotation of the said detent-swinging member, through the engagement of the pinion thereof with the gear-wheel borne by the frame.

In testimony whereof I hereunto affix my signature.

ÁRPÁD BARÉNYI.