Feb. 16, 1926. 1,573,599

W. E. ELLIOTT

SYSTEM FOR MAKING PADS

Filed Dec. 27, 1919 42 Sheets-Sheet 1

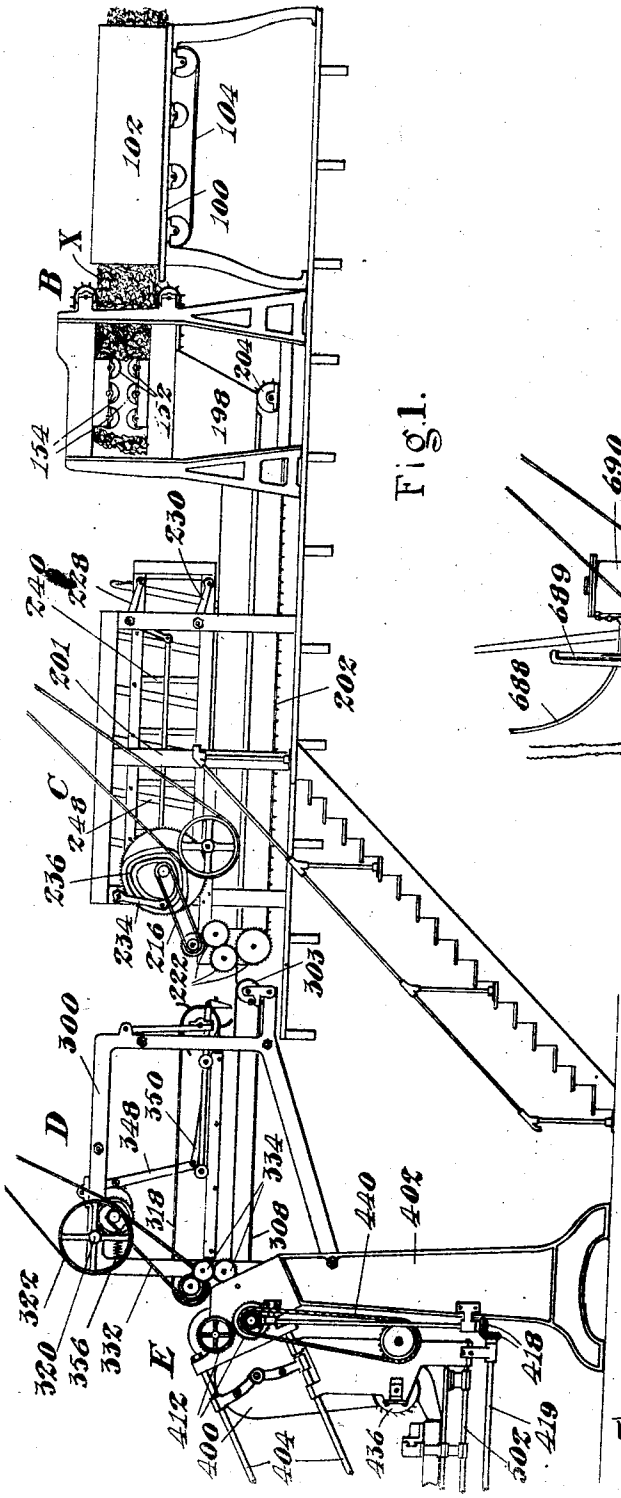

Fig. 1.

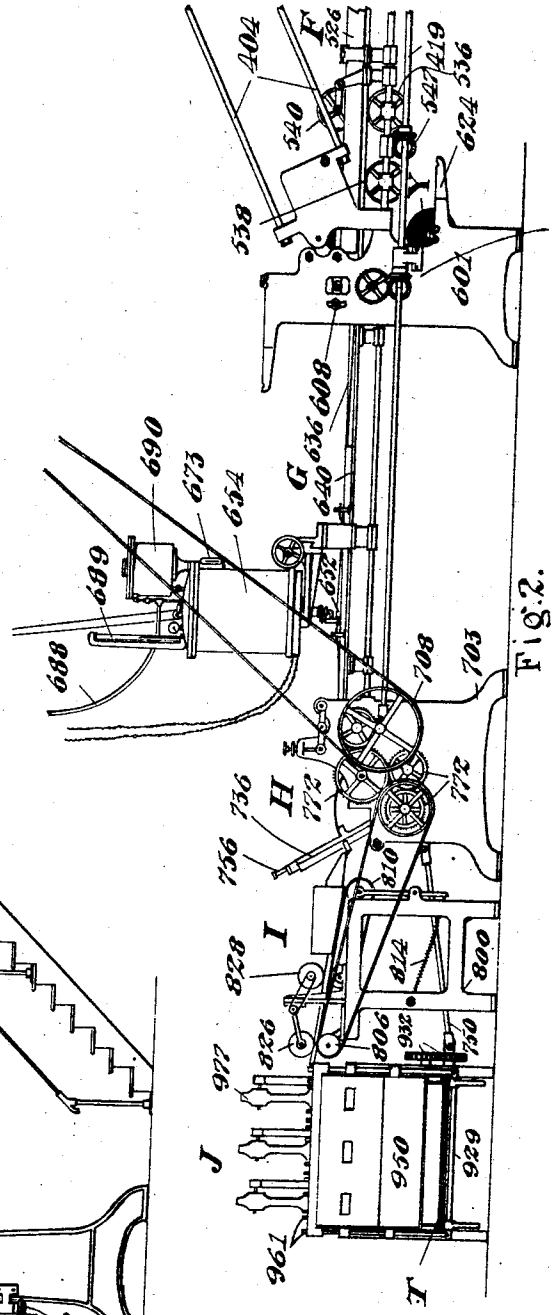

Fig. 2.

Inventor
William E. Elliott.
By Lyon & Lyon
Attorney.

Feb. 16, 1926. 1,573,599

W. E. ELLIOTT

SYSTEM FOR MAKING PADS

Filed Dec. 27, 1919 42 Sheets-Sheet 2

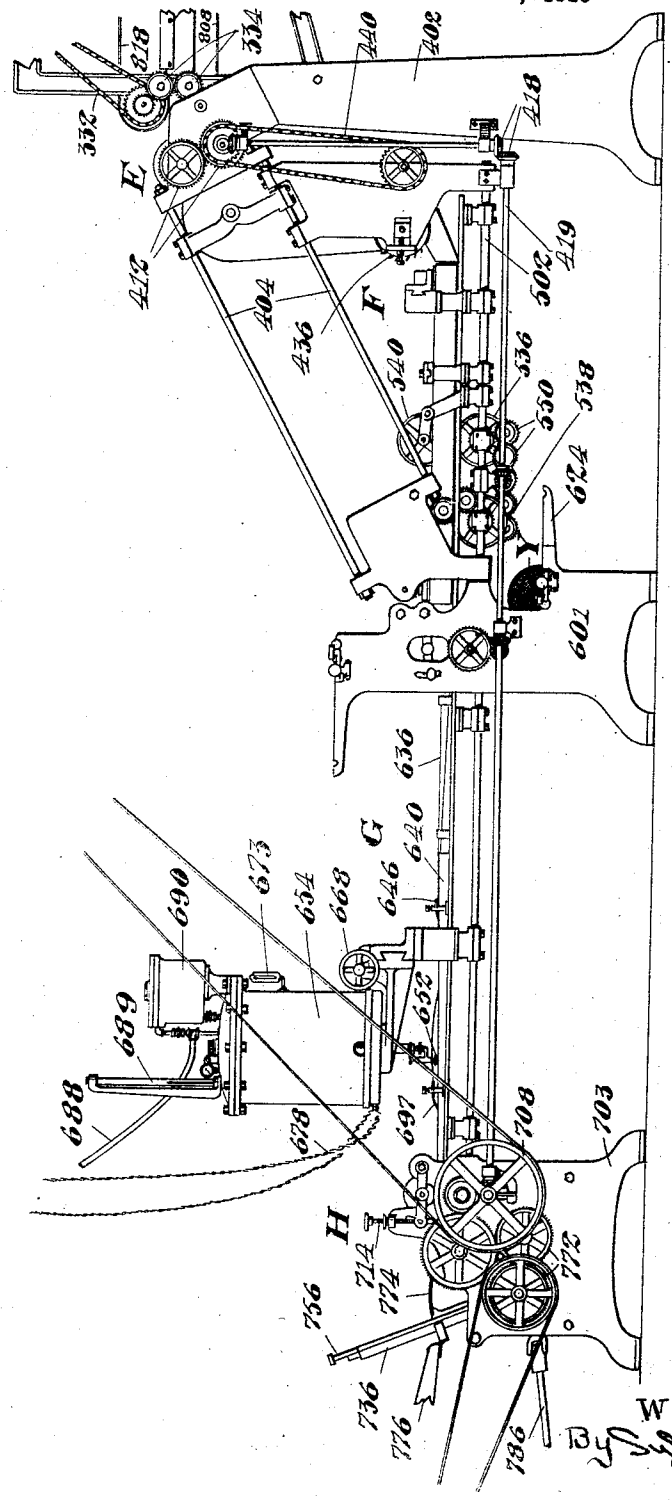

Fig. 3.

Inventor
William E Elliott
By Sylvanus A. Cobb.
Attorney.

Feb. 16, 1926. 1,573,599

W. E. ELLIOTT

SYSTEM FOR MAKING PADS

Filed Dec. 27, 1919 42 Sheets-Sheet 3

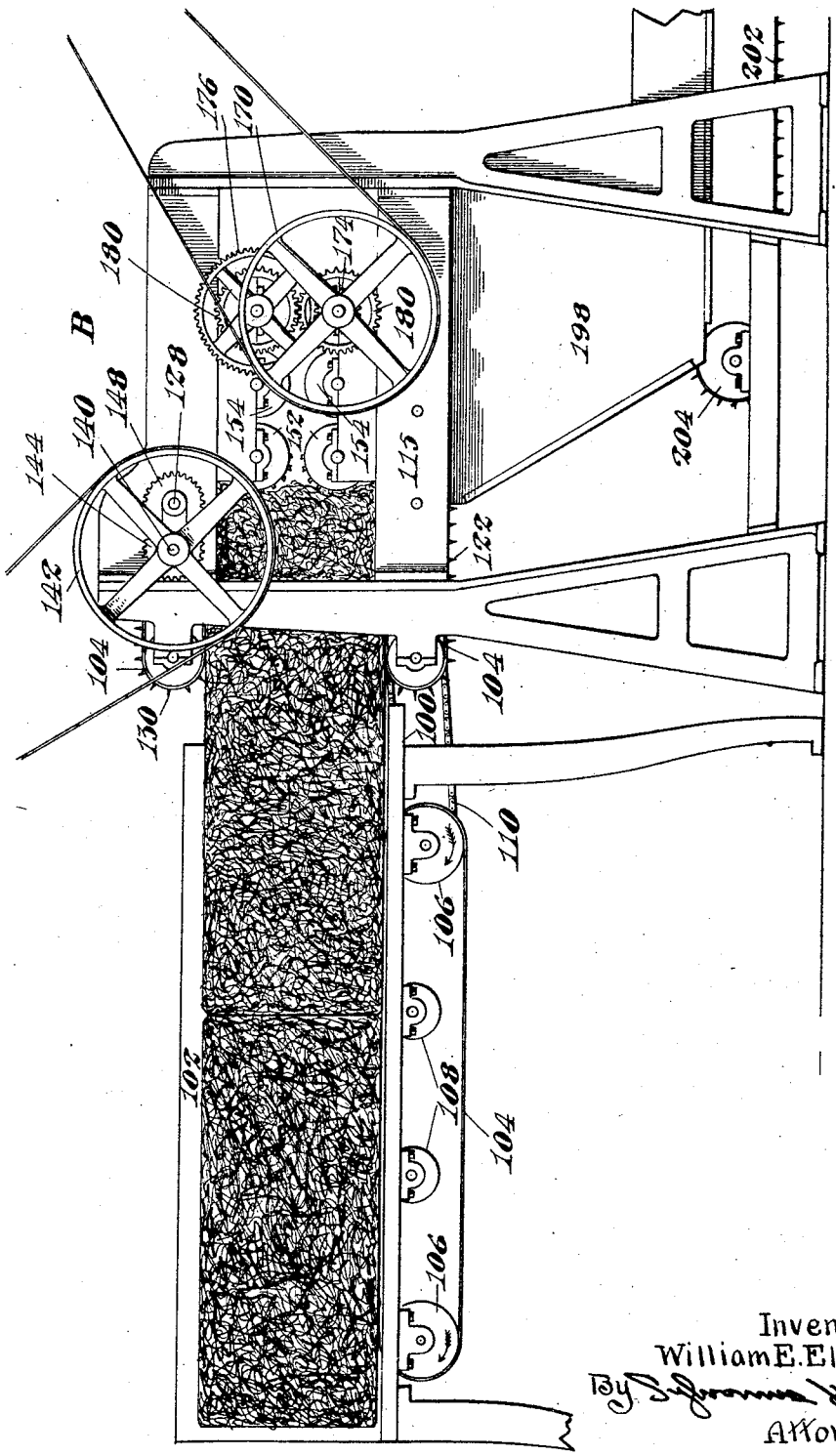

Fig. 4.

Inventor
William E. Elliott.
By
Attorney.

Feb. 16, 1926. 1,573,599

W. E. ELLIOTT

SYSTEM FOR MAKING PADS

Filed Dec. 27, 1919 42 Sheets-Sheet 4

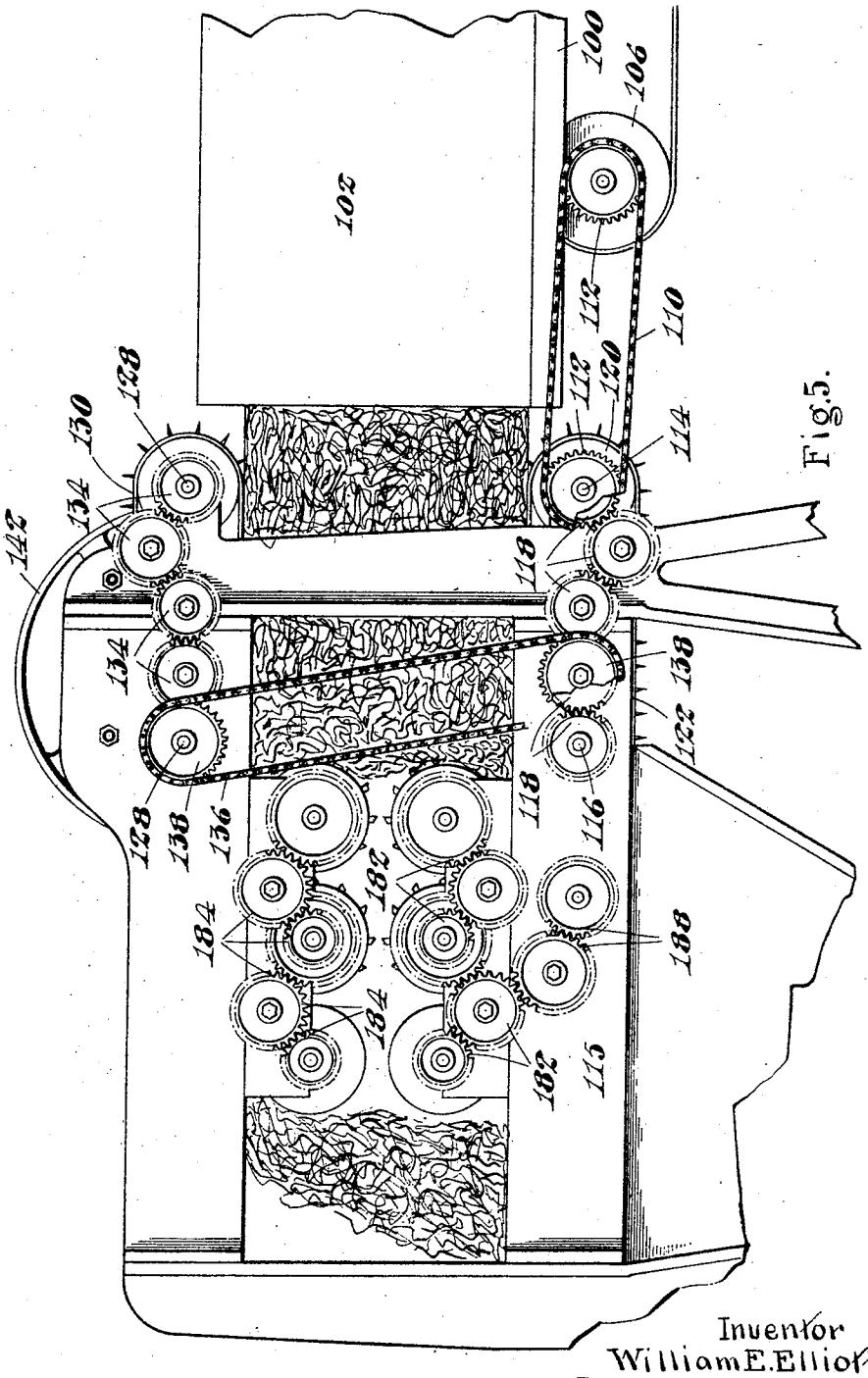

Fig.5.

Inventor
William E. Elliott
By
Attorney.

Feb. 16, 1926. 1,573,599

W. E. ELLIOTT

SYSTEM FOR MAKING PADS

Filed Dec. 27, 1919 42 Sheets-Sheet 5

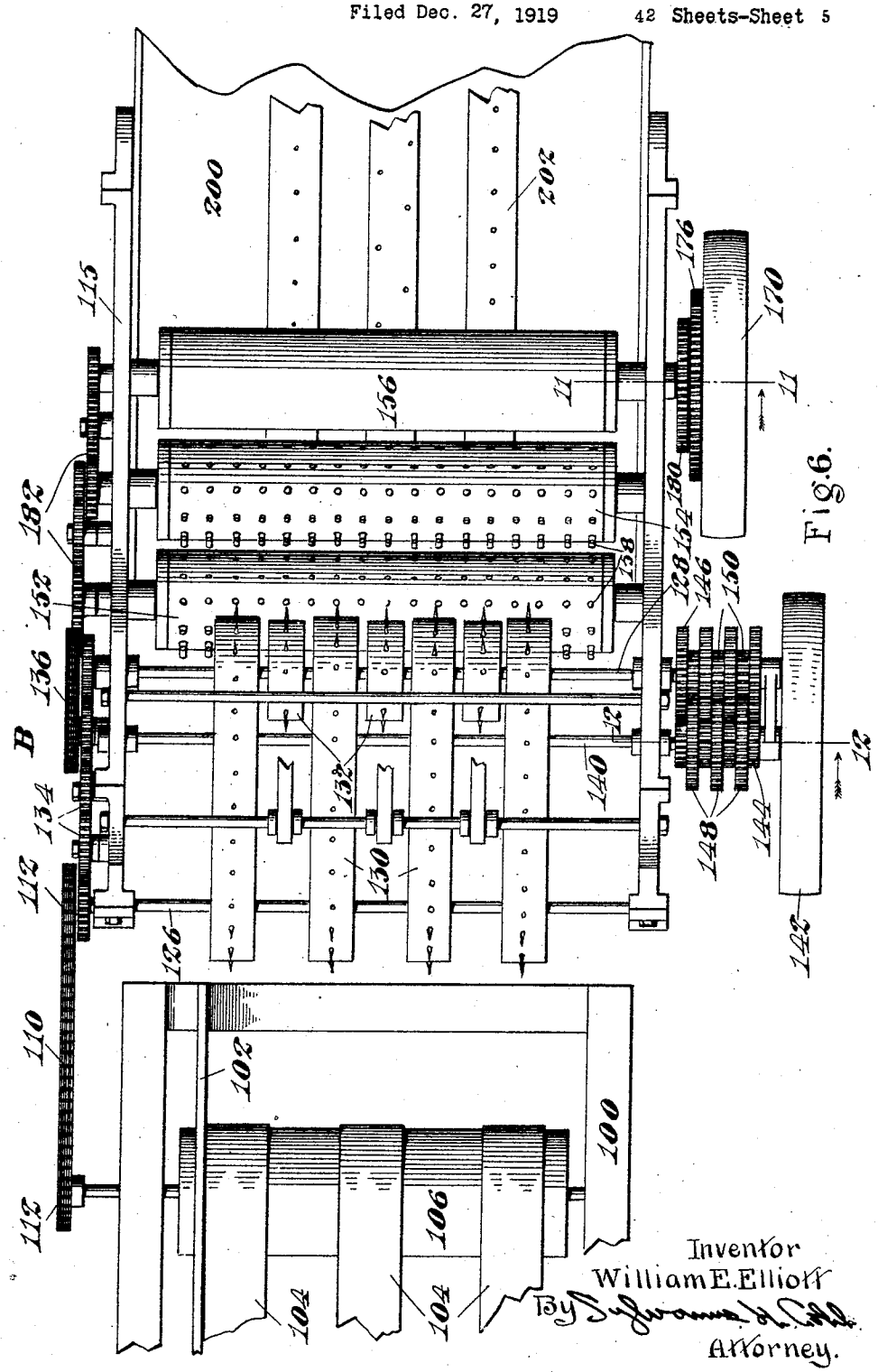

Fig. 6.

Inventor
William E. Elliott
By
Attorney.

Feb. 16, 1926. 1,573,599

W. E. ELLIOTT

SYSTEM FOR MAKING PADS

Filed Dec. 27, 1919 42 Sheets-Sheet 6

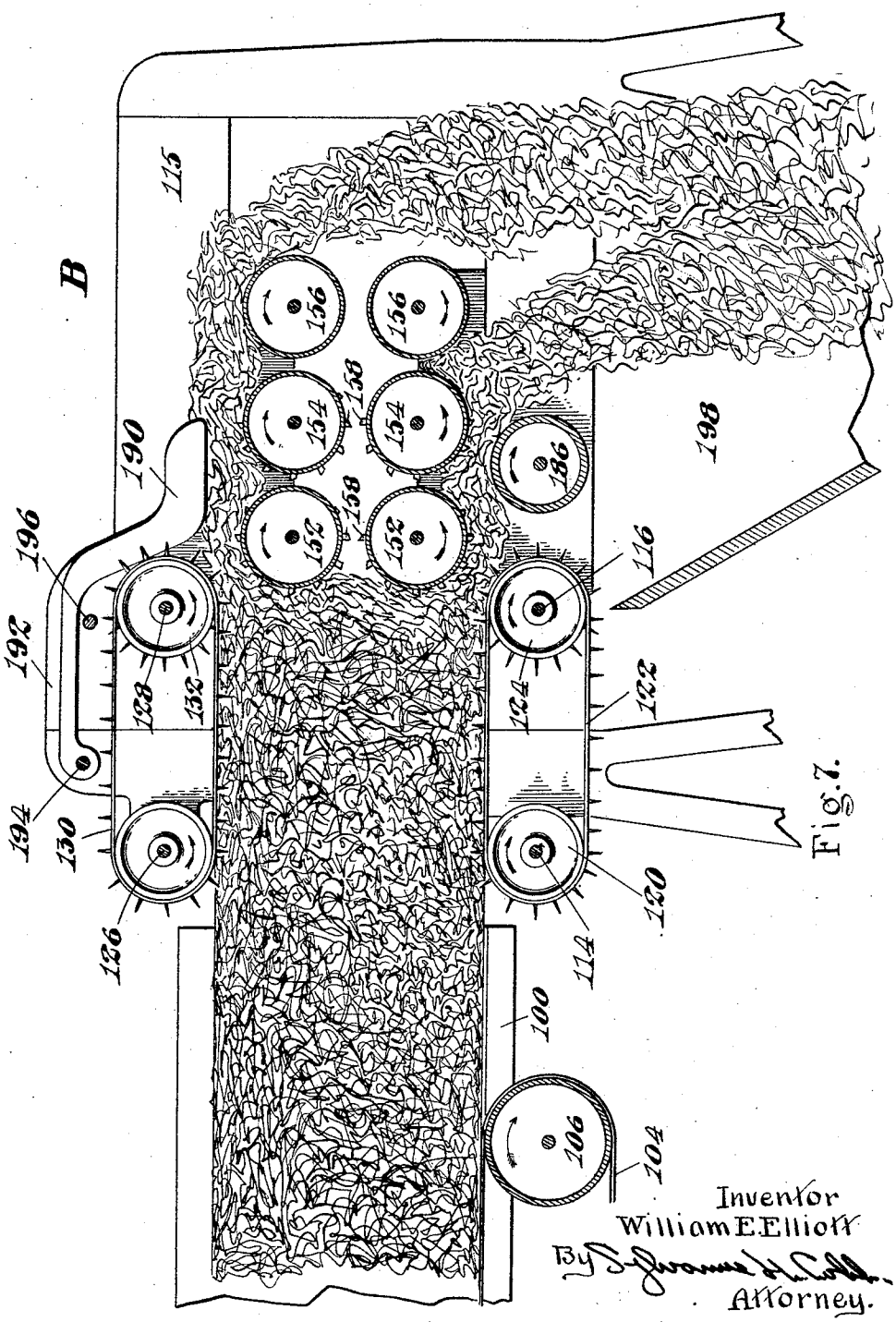

Fig. 7.

Inventor
William E. Elliott
By
Attorney.

Feb. 16, 1926. 1,573,599

W. E. ELLIOTT

SYSTEM FOR MAKING PADS

Filed Dec. 27, 1919 42 Sheets-Sheet 7

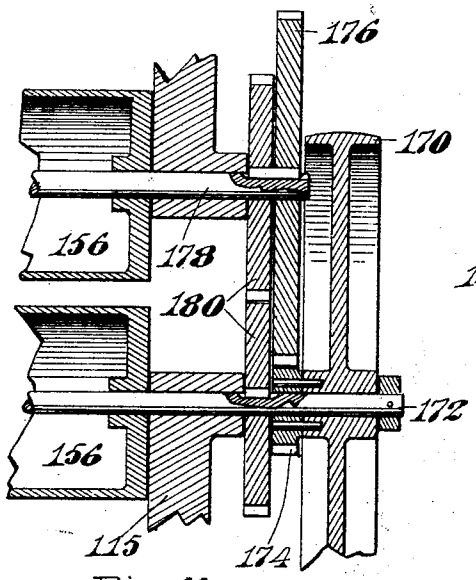

Fig. 11.

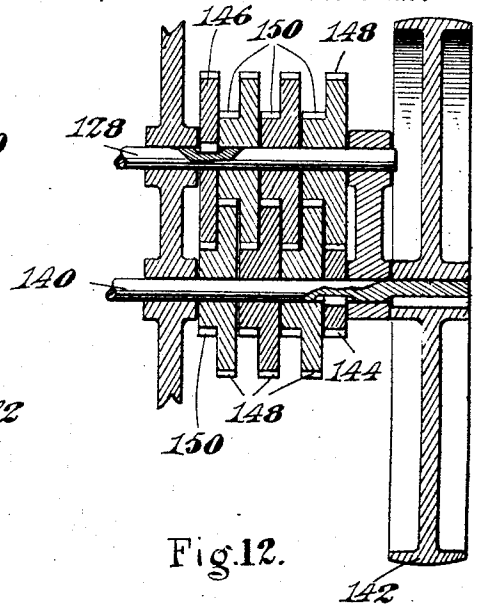

Fig. 12.

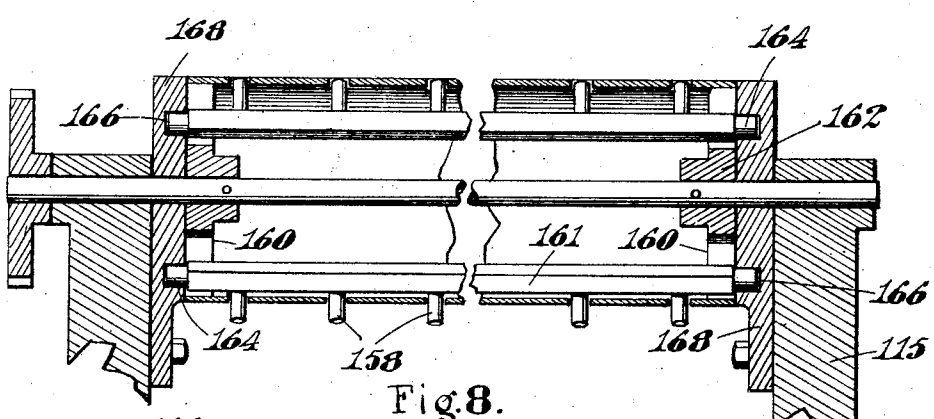

Fig. 8.

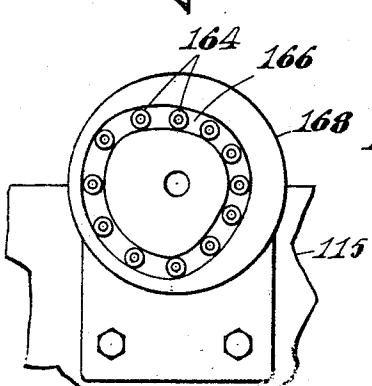

Fig. 10.

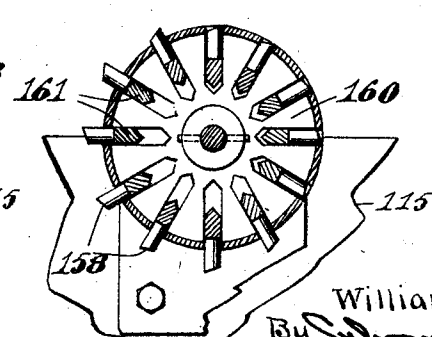

Fig 9.

Inventor
William E. Elliott
By Sylvanus H. Cobb
Attorney.

Feb. 16, 1926. 1,573,599

W. E. ELLIOTT

SYSTEM FOR MAKING PADS

Filed Dec. 27, 1919 42 Sheets-Sheet 8

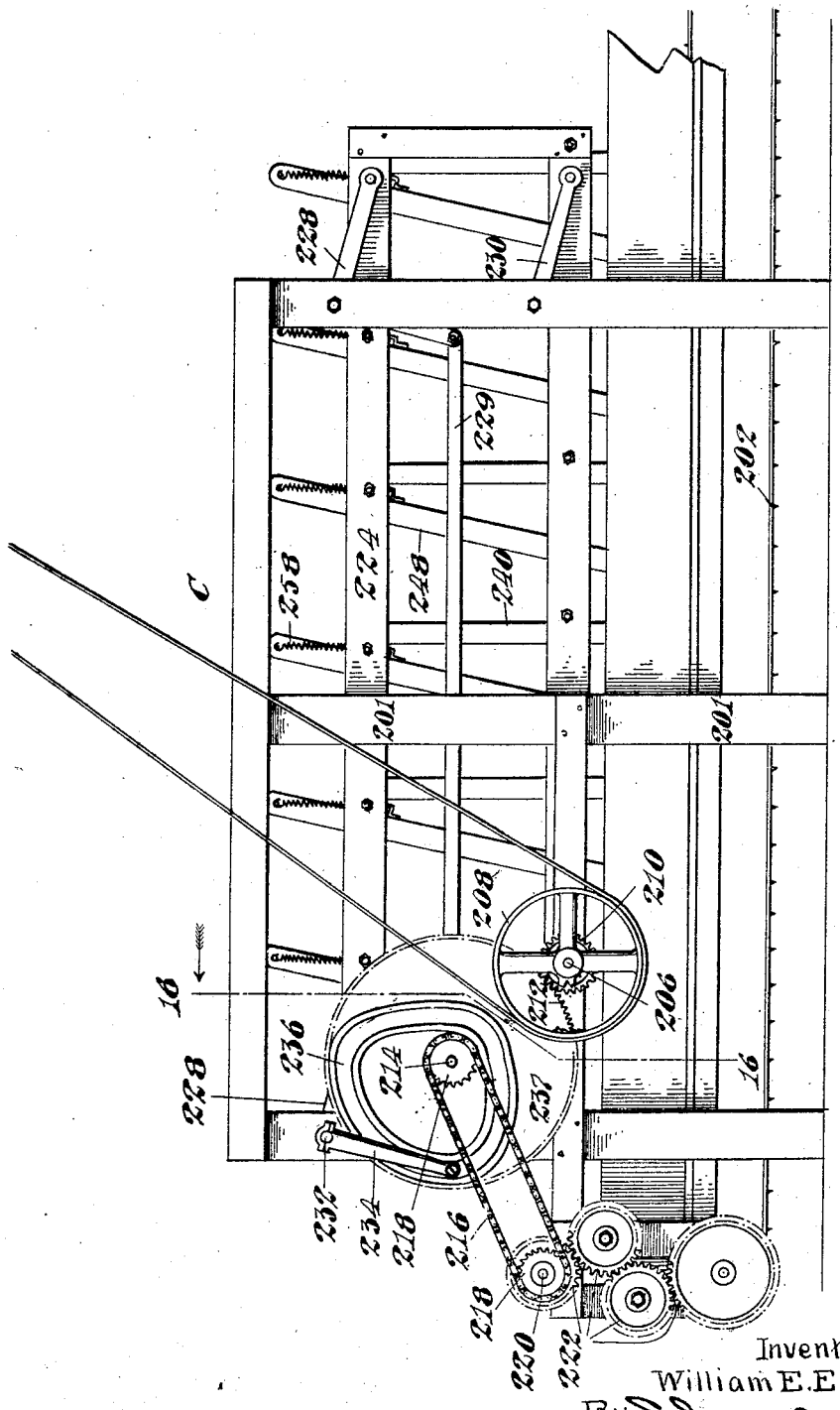

Fig. 13.

Inventor
William E. Elliott
By
Attorney.

Feb. 16, 1926. 1,573,599

W. E. ELLIOTT

SYSTEM FOR MAKING PADS

Filed Dec. 27, 1919 42 Sheets-Sheet 9

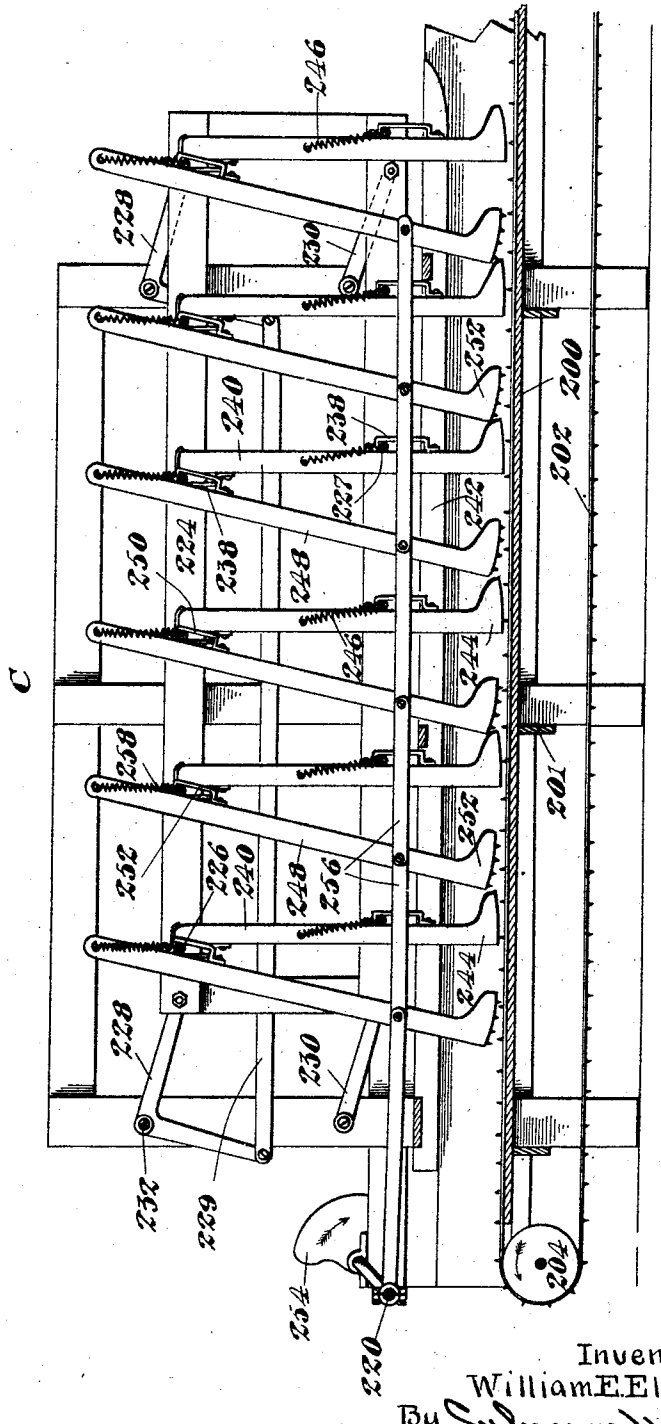

Fig. 14.

Inventor
William E. Elliott.
By Sylvanus H. Cobb.
Attorney.

Feb. 16, 1926. 1,573,599

W. E. ELLIOTT

SYSTEM FOR MAKING PADS

Filed Dec. 27, 1919 42 Sheets-Sheet 10

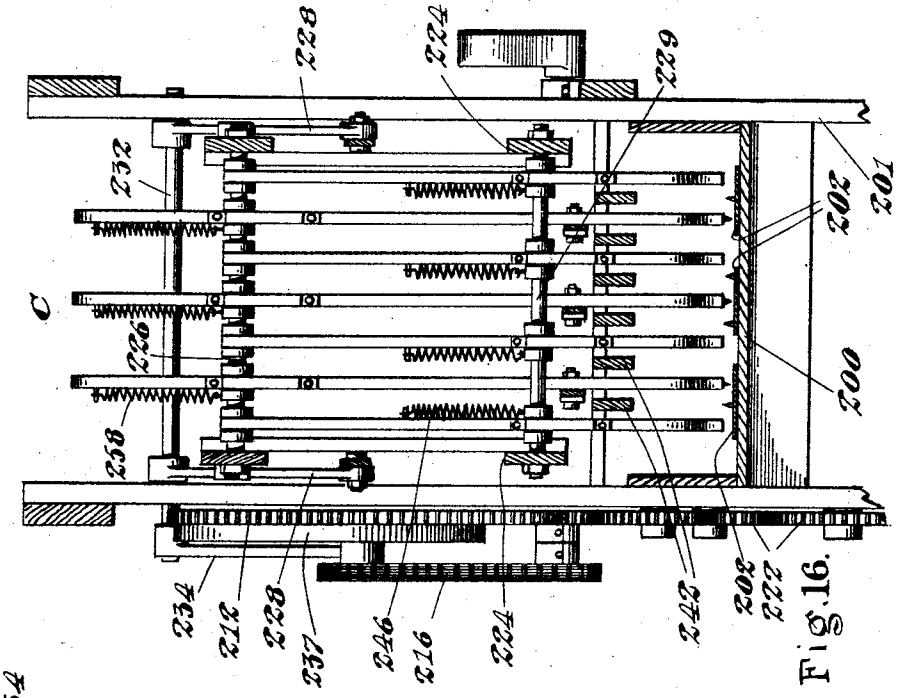

Fig. 16.

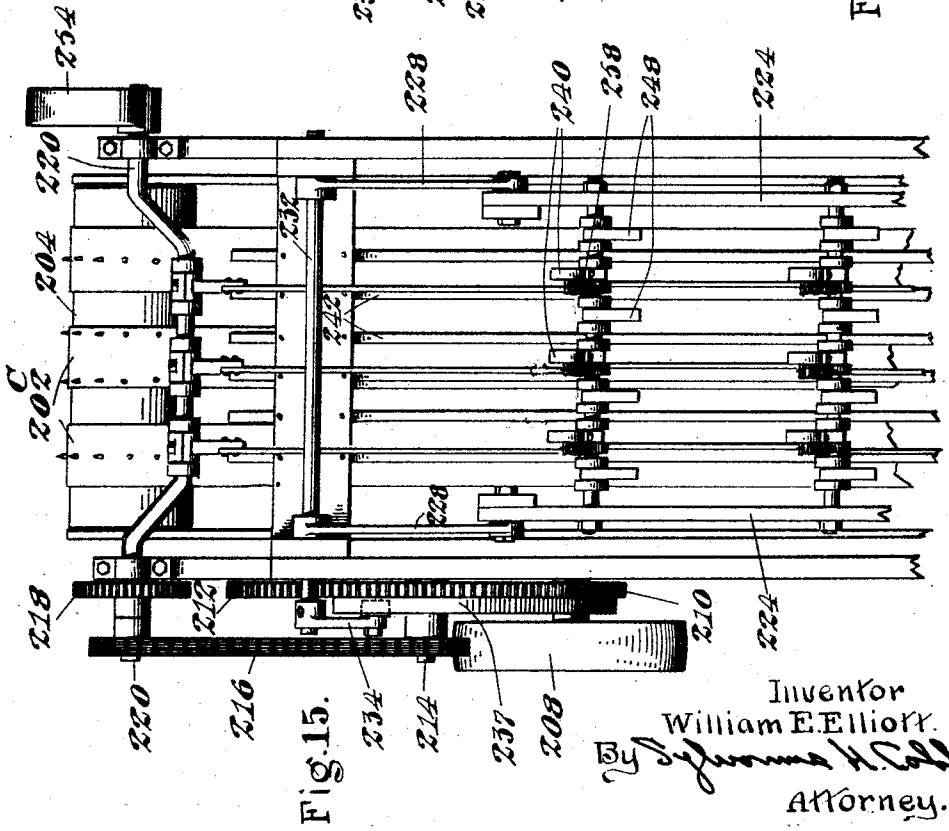

Fig. 15.

Inventor
William E. Elliott.
By Jerome H. Cole
Attorney.

Feb. 16, 1926. 1,573,599

W. E. ELLIOTT

SYSTEM FOR MAKING PADS

Filed Dec. 27, 1919 42 Sheets-Sheet 11

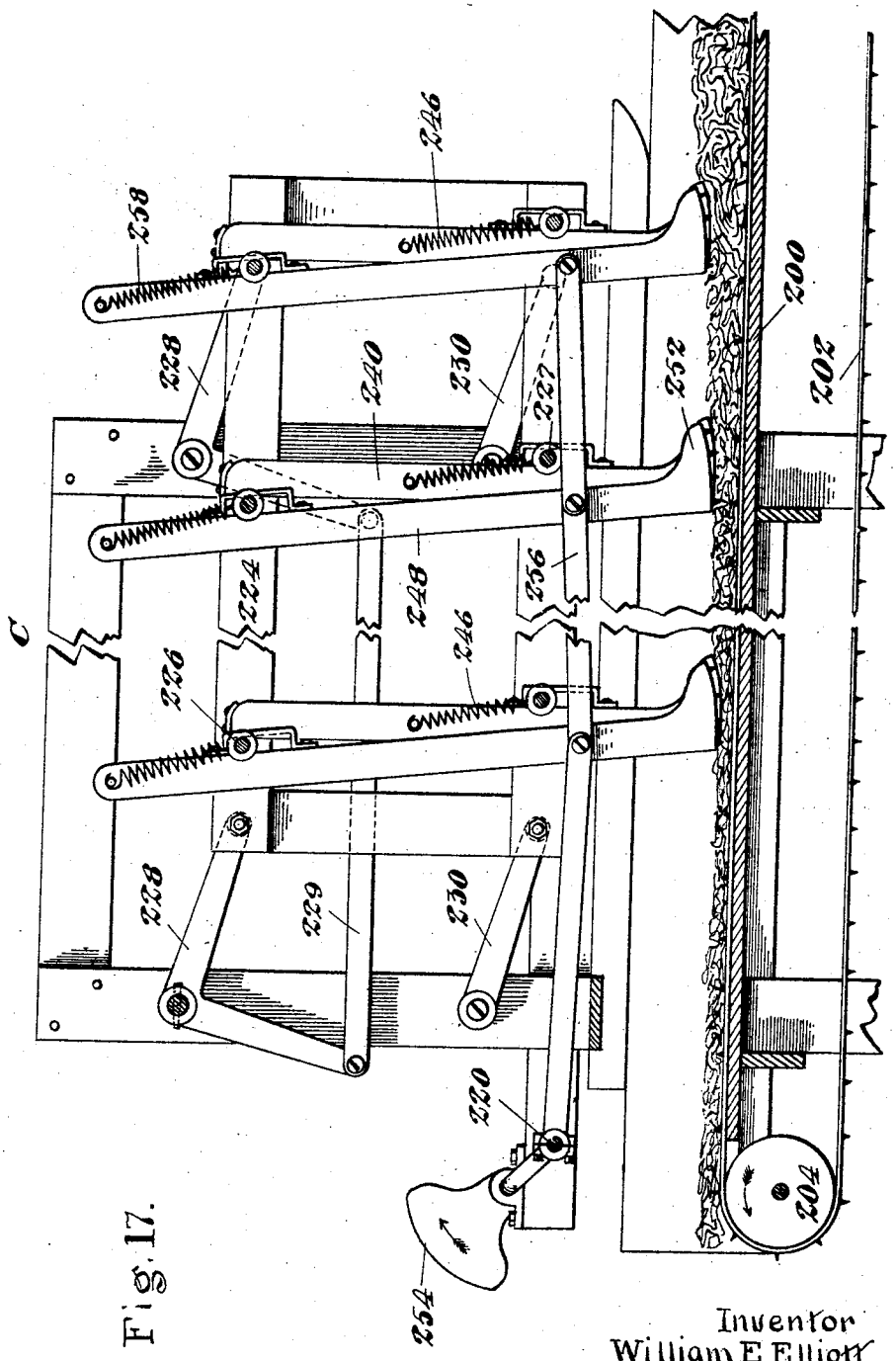

Fig. 17.

Inventor
William E. Elliott.
By
Attorney.

Feb. 16, 1926. 1,573,599

W. E. ELLIOTT

SYSTEM FOR MAKING PADS

Filed Dec. 27, 1919 42 Sheets-Sheet 12

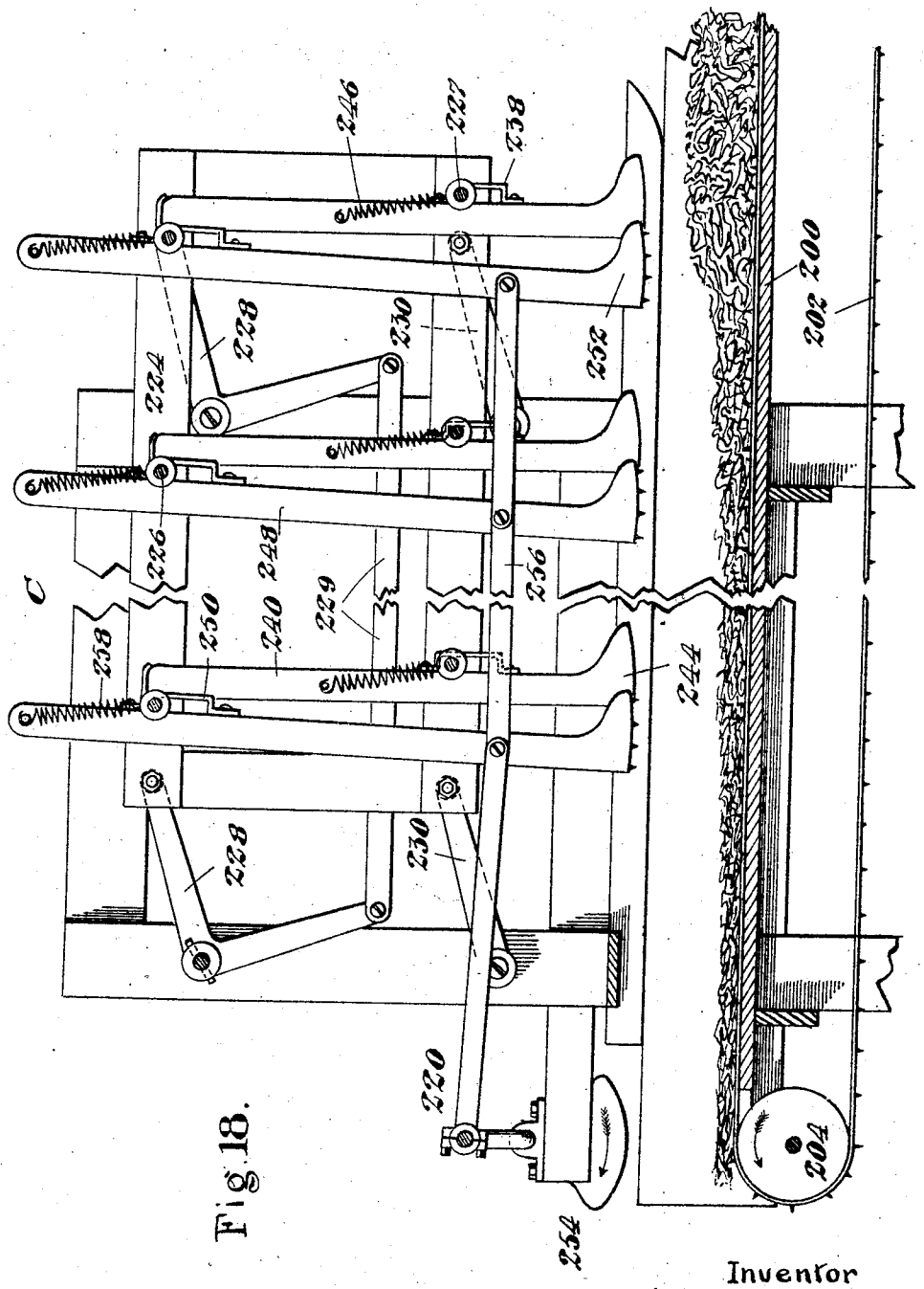

Fig. 18.

Inventor
William E. Elliott.
By Sylvanus H. Cobb
Attorney

Feb. 16, 1926. 1,573,599

W. E. ELLIOTT

SYSTEM FOR MAKING PADS

Filed Dec. 27, 1919 42 Sheets-Sheet 13

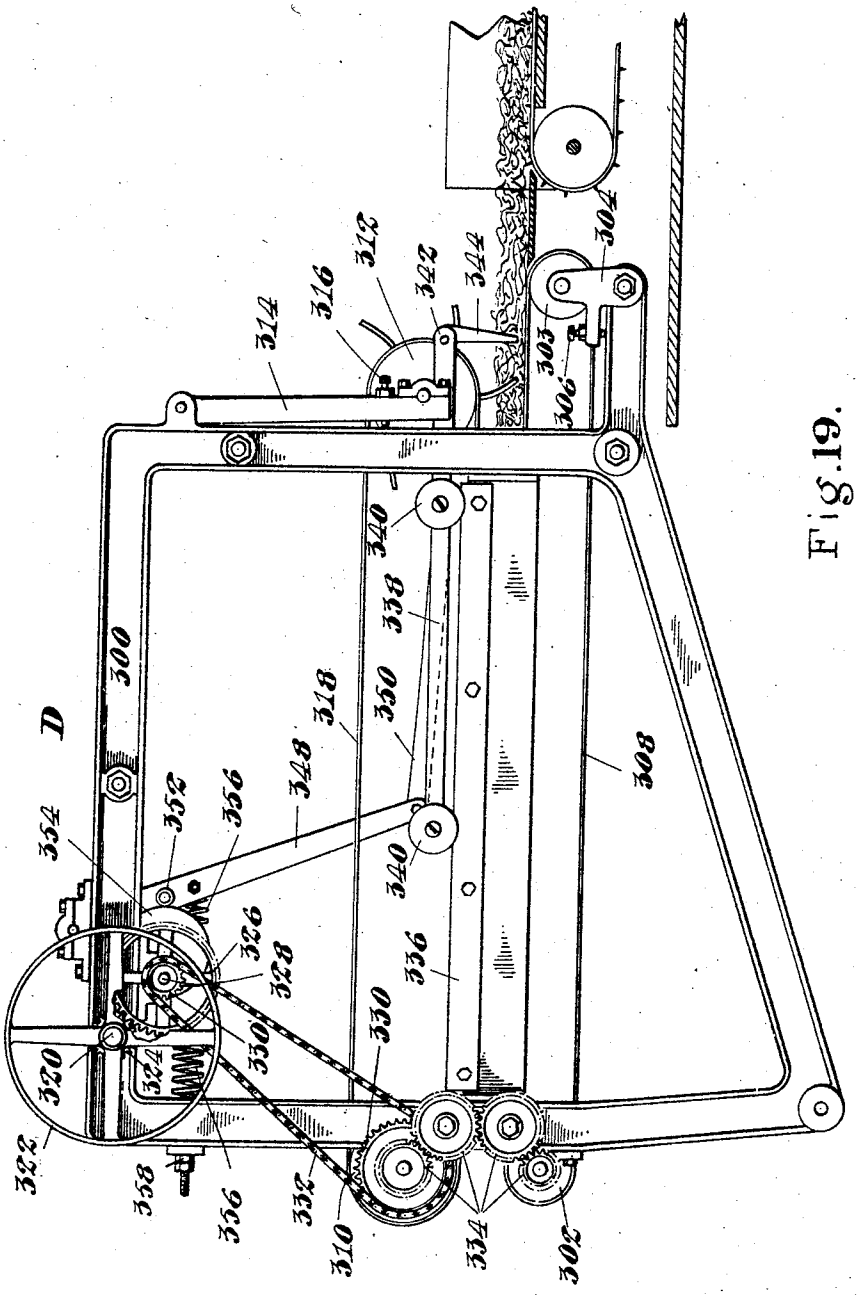

Fig. 19.

Inventor
William E. Elliott
By
Attorney.

Feb. 16, 1926. 1,573,599

W. E. ELLIOTT

SYSTEM FOR MAKING PADS

Filed Dec. 27, 1919 42 Sheets-Sheet 14

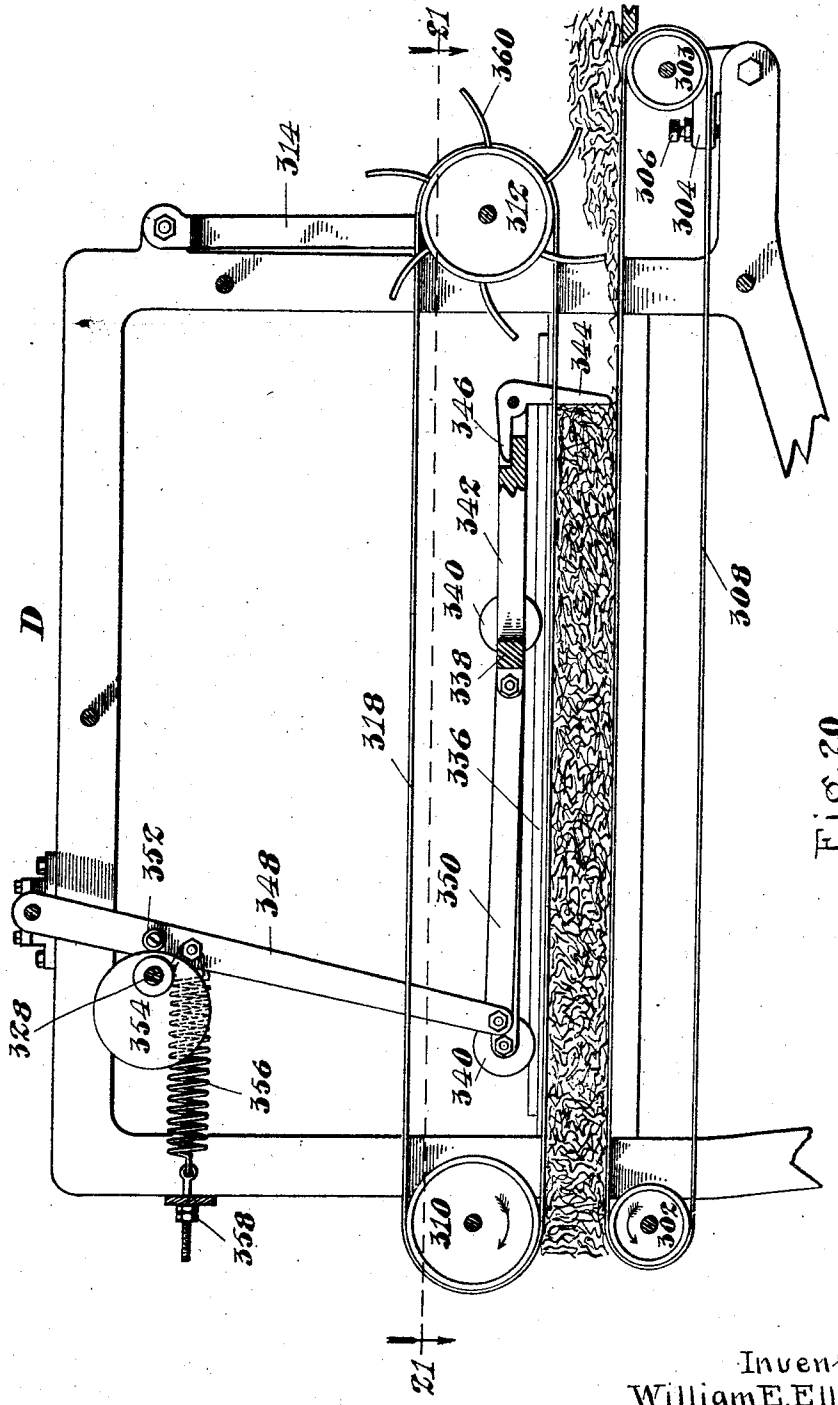

Fig. 20.

Inventor
William E. Elliott
By
Attorney.

Feb. 16, 1926. 1,573,599

W. E. ELLIOTT

SYSTEM FOR MAKING PADS

Filed Dec. 27, 1919 42 Sheets-Sheet 15

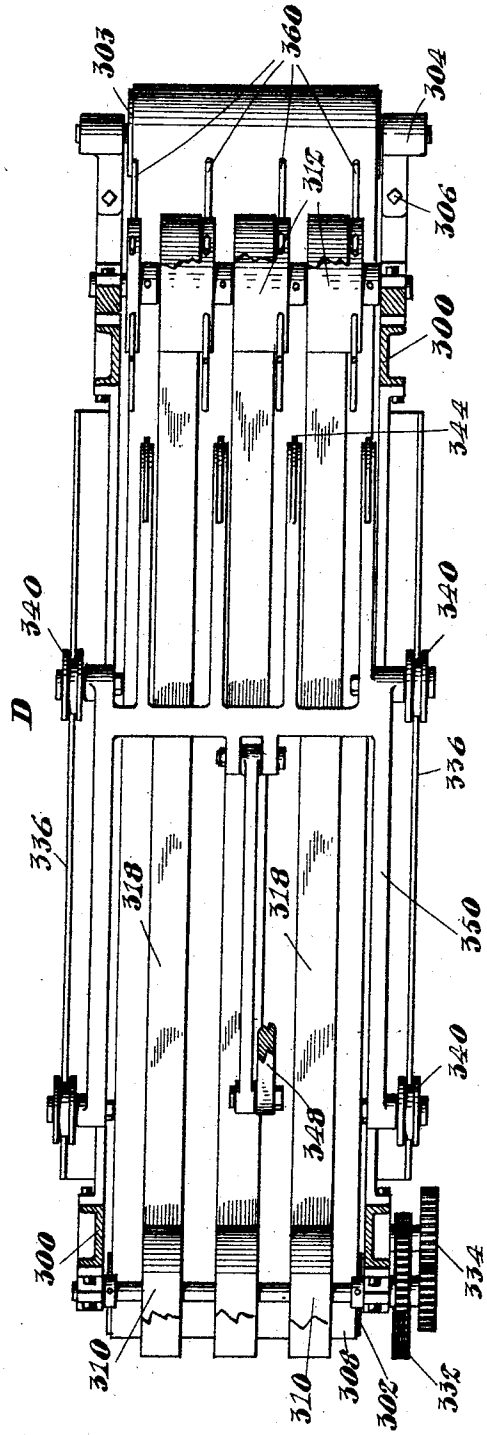

Fig. 21.

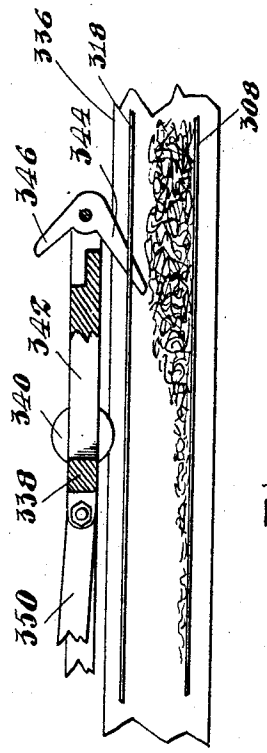

Fig. 22.

Inventor
William E. Elliott
By
Attorney.

Feb. 16, 1926. 1,573,599

W. E. ELLIOTT

SYSTEM FOR MAKING PADS

Filed Dec. 27, 1919 42 Sheets-Sheet 16

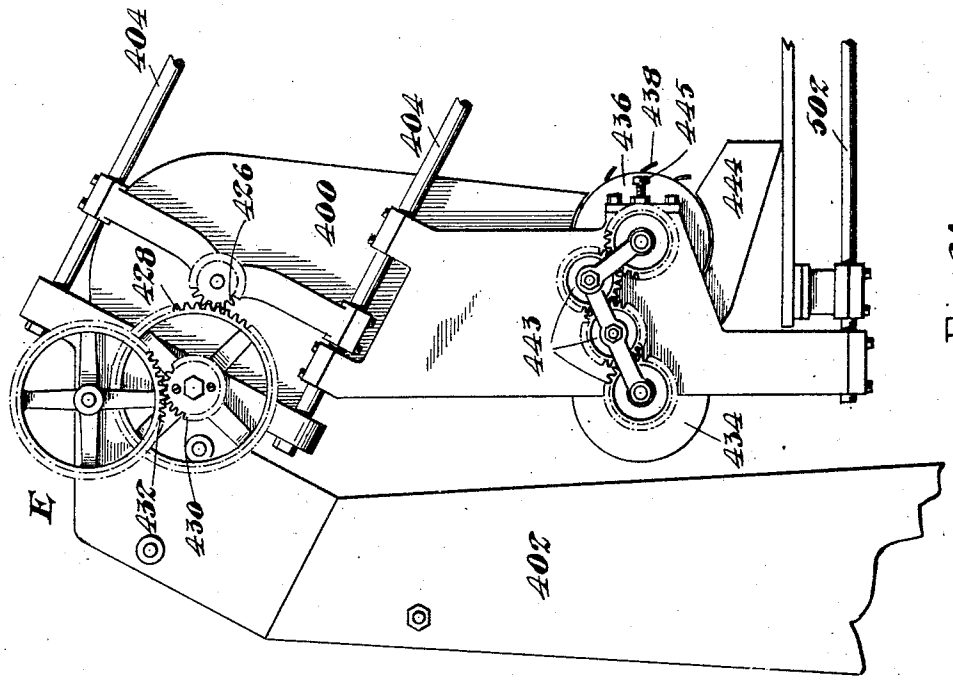

Fig. 24.

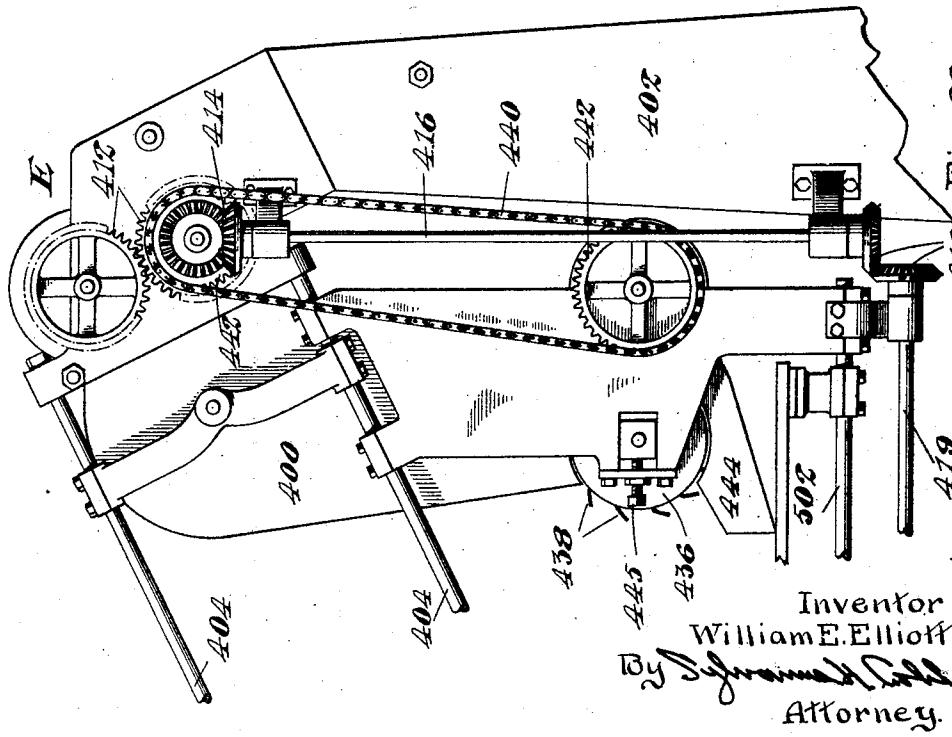

Fig. 23.

Inventor
William E. Elliott
By
Attorney.

Feb. 16, 1926. 1,573,599

W. E. ELLIOTT

SYSTEM FOR MAKING PADS

Filed Dec. 27, 1919 42 Sheets-Sheet 17

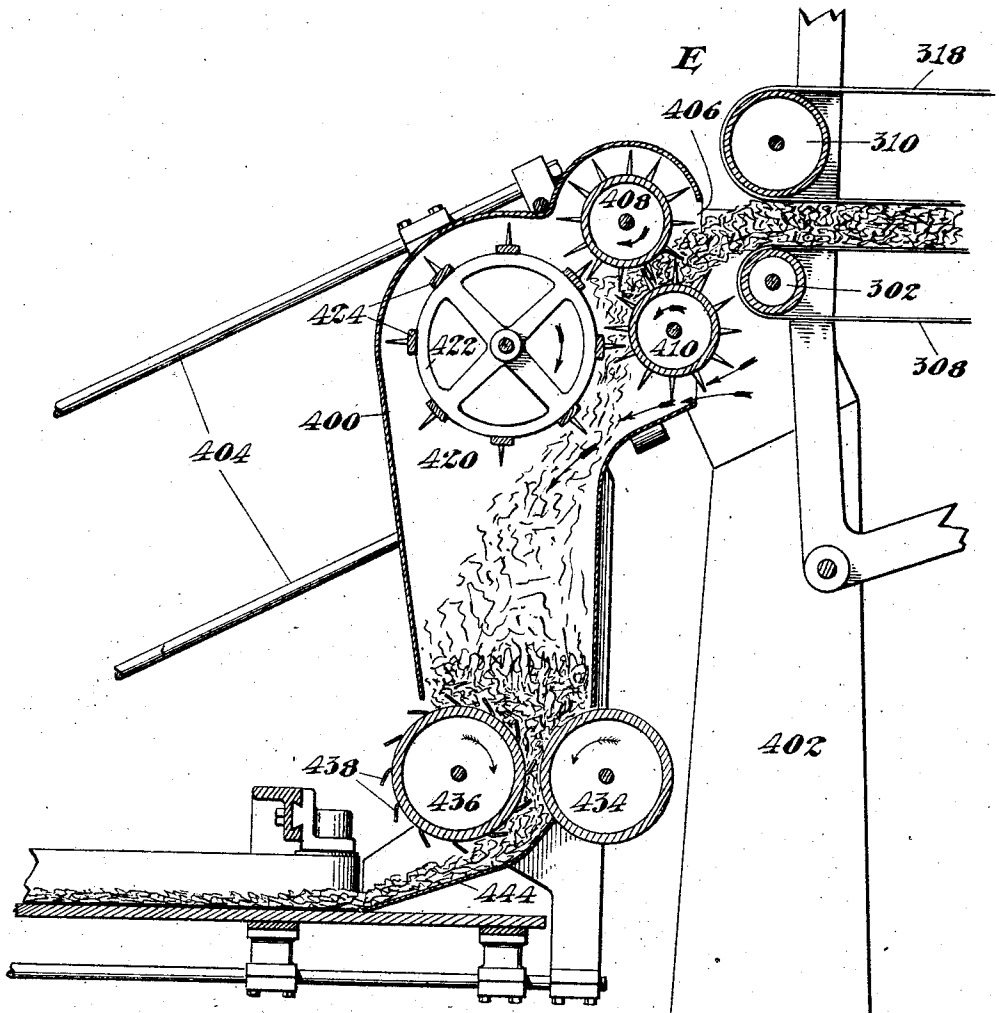

Fig. 25.

Inventor
William E. Elliott.
By
Attorney

Feb. 16, 1926. 1,573,599

W. E. ELLIOTT

SYSTEM FOR MAKING PADS

Filed Dec. 27, 1919 42 Sheets-Sheet 18

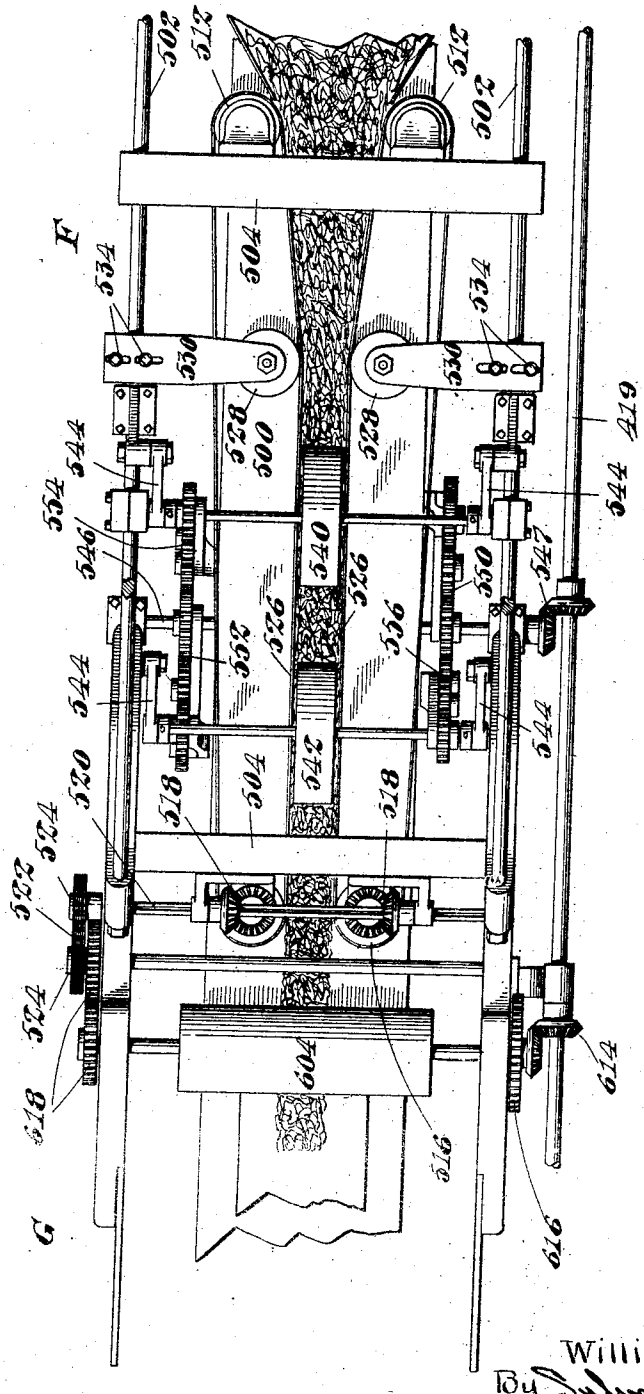

Fig. 26.

Inventor
William E Elliott.
By Sylvanus H Cobb.
Attorney.

Feb. 16, 1926. 1,573,599

W. E. ELLIOTT

SYSTEM FOR MAKING PADS

Filed Dec. 27, 1919 42 Sheets-Sheet 19

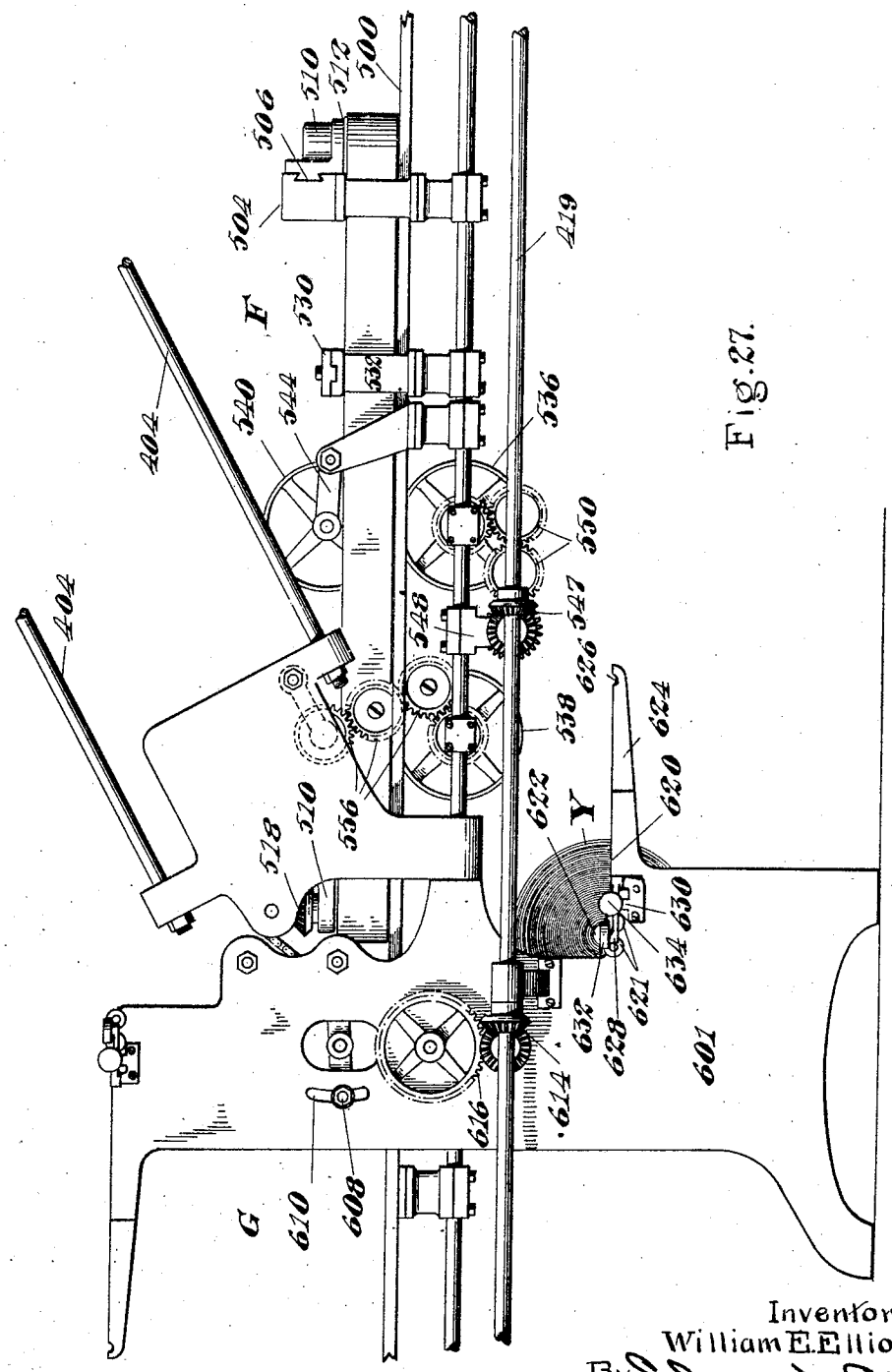

Fig. 27.

Inventor
William E. Elliott
By
Attorney.

Feb. 16, 1926. 1,573,599

W. E. ELLIOTT

SYSTEM FOR MAKING PADS

Filed Dec. 27, 1919 42 Sheets-Sheet 20

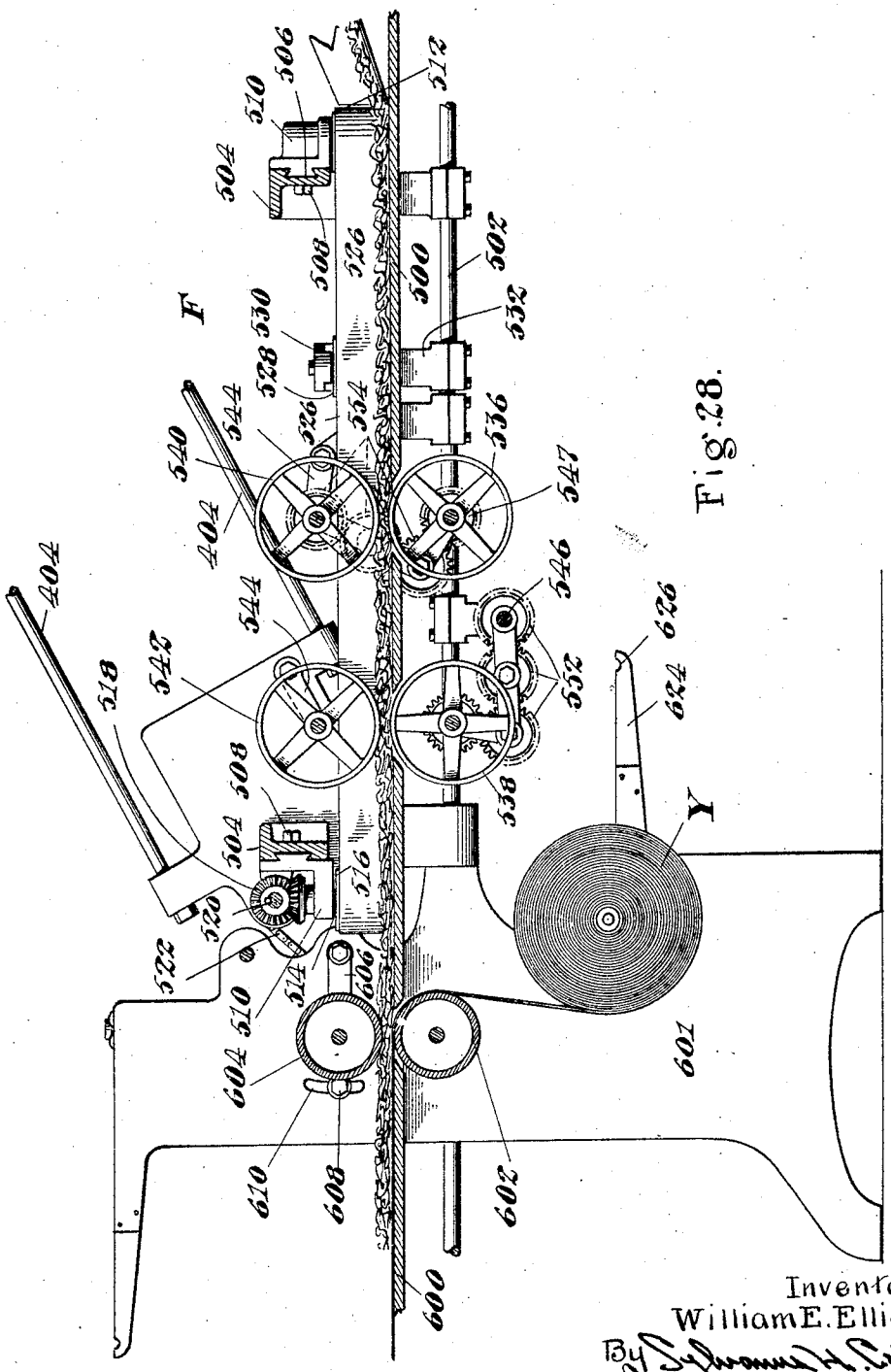

Fig. 28.

Inventor
William E. Elliott
By Sylvanus H. Cobb
Attorney.

Feb. 16, 1926. 1,573,599

W. E. ELLIOTT

SYSTEM FOR MAKING PADS

Filed Dec. 27, 1919 42 Sheets-Sheet 21

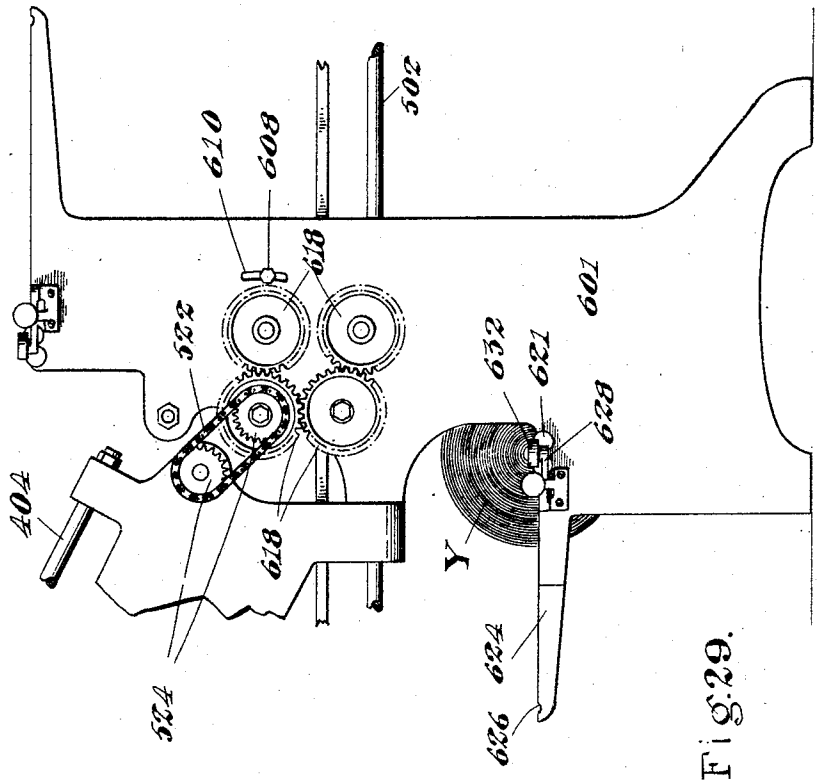

Fig. 29.

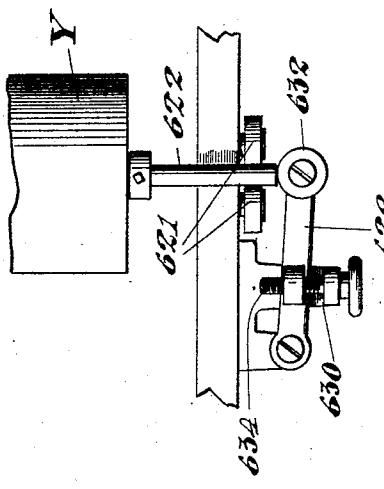

Fig. 30.

Inventor
William E. Elliott
By Sylvanus A. Smith
Attorney.

Feb. 16, 1926. 1,573,599

W. E. ELLIOTT

SYSTEM FOR MAKING PADS

Filed Dec. 27, 1919 42 Sheets-Sheet 22

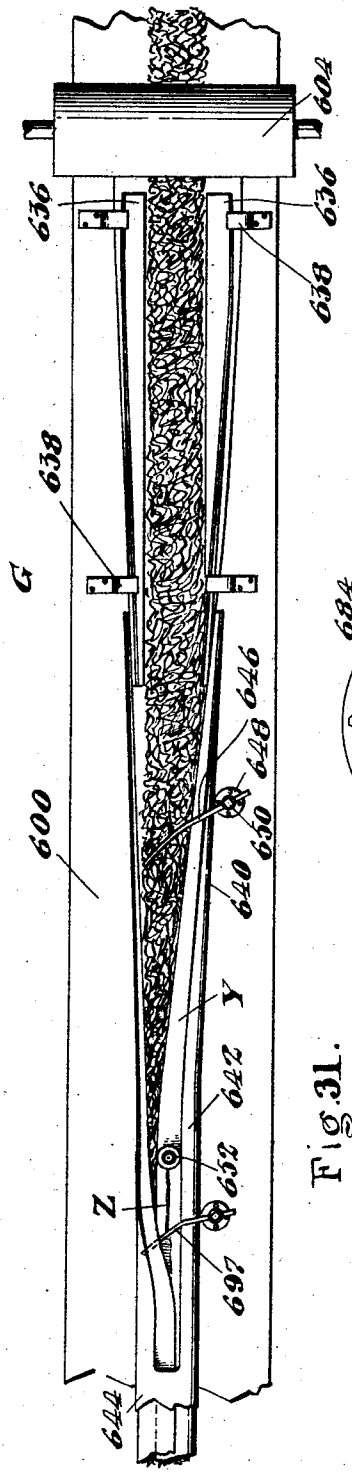

Fig. 31.

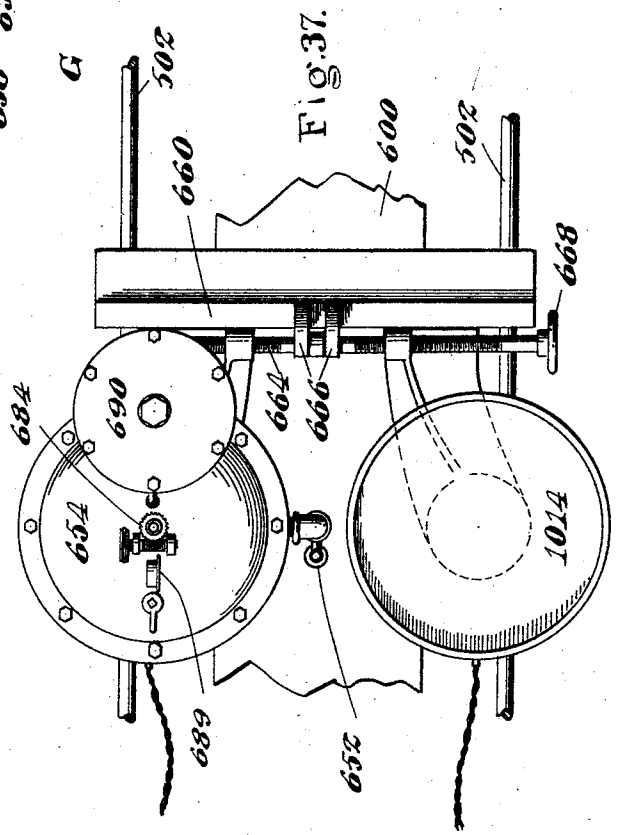

Fig. 37.

Inventor
William E. Elliott
By Sylvanus A. Cobb
Attorney.

Feb. 16, 1926. 1,573,599

W. E. ELLIOTT

SYSTEM FOR MAKING PADS

Filed Dec. 27, 1919 42 Sheets-Sheet 23

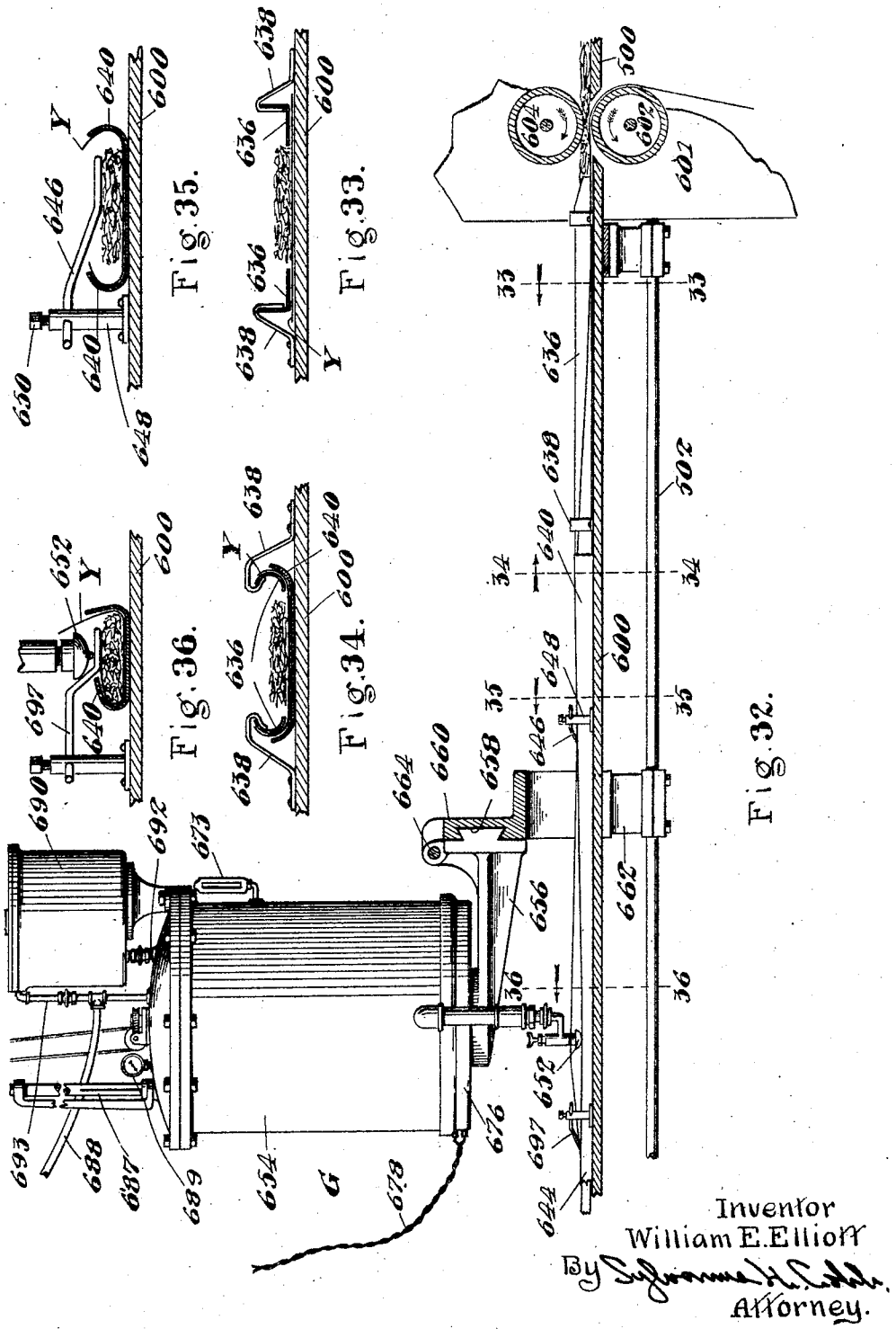

Feb. 16, 1926. 1,573,599

W. E. ELLIOTT

SYSTEM FOR MAKING PADS

Filed Dec. 27, 1919 42 Sheets-Sheet 24

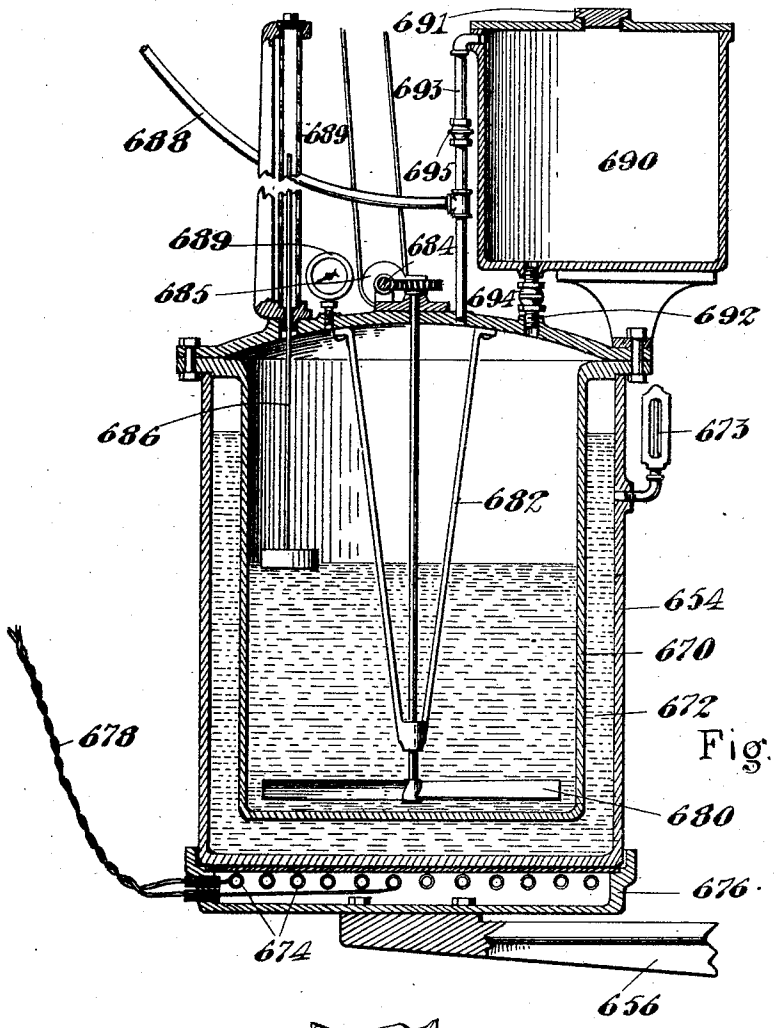

Fig. 38.

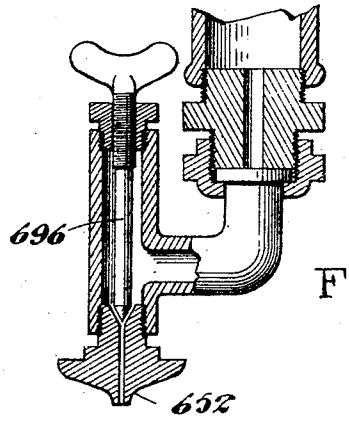

Fig. 39

Inventor
William E. Elliott
By Sylvanus H. Cobb.
Attorney.

Feb. 16, 1926. 1,573,599

W. E. ELLIOTT

SYSTEM FOR MAKING PADS

Filed Dec. 27, 1919 42 Sheets-Sheet 25

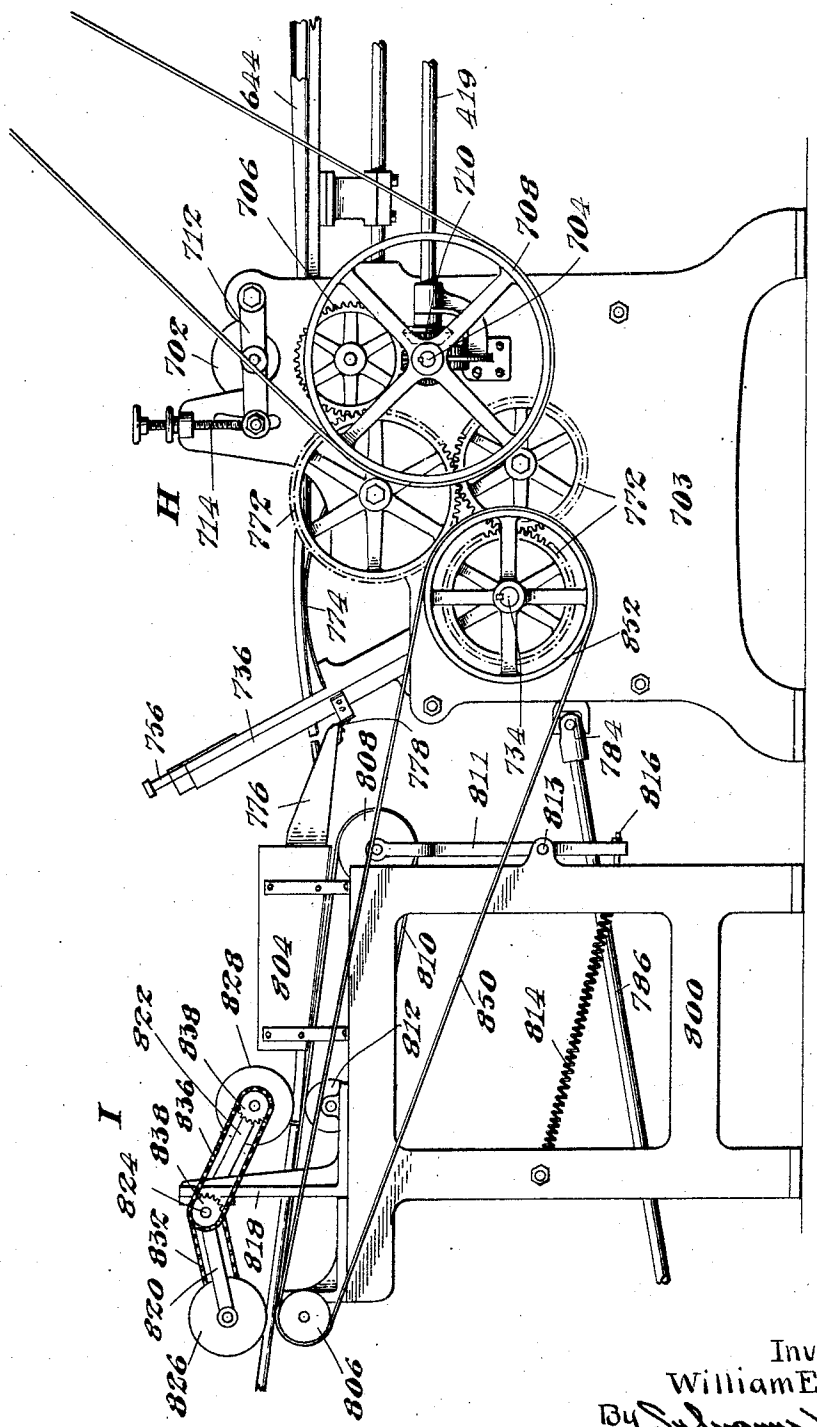

Fig. 40.

Inventor
William E. Elliott
By Sylvanus H. Webb
Attorney.

Feb. 16, 1926. 1,573,599

W. E. ELLIOTT

SYSTEM FOR MAKING PADS

Filed Dec. 27, 1919 42 Sheets-Sheet 26

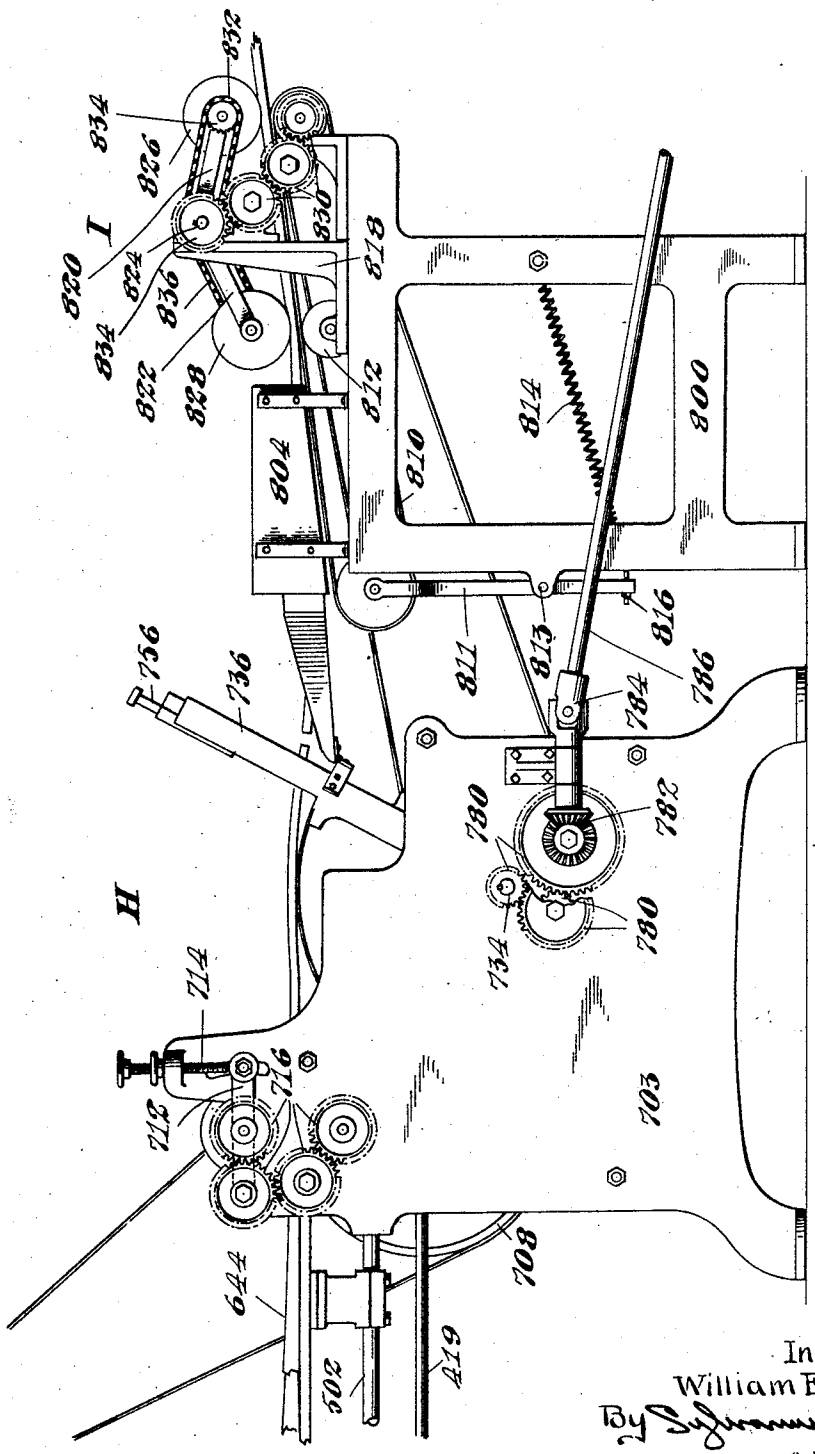

Fig. 41.

Inventor
William E. Elliott
By Sylvanus A. Gill.
Attorney.

Feb. 16, 1926. 1,573,599

W. E. ELLIOTT

SYSTEM FOR MAKING PADS

Filed Dec. 27, 1919 42 Sheets-Sheet 27

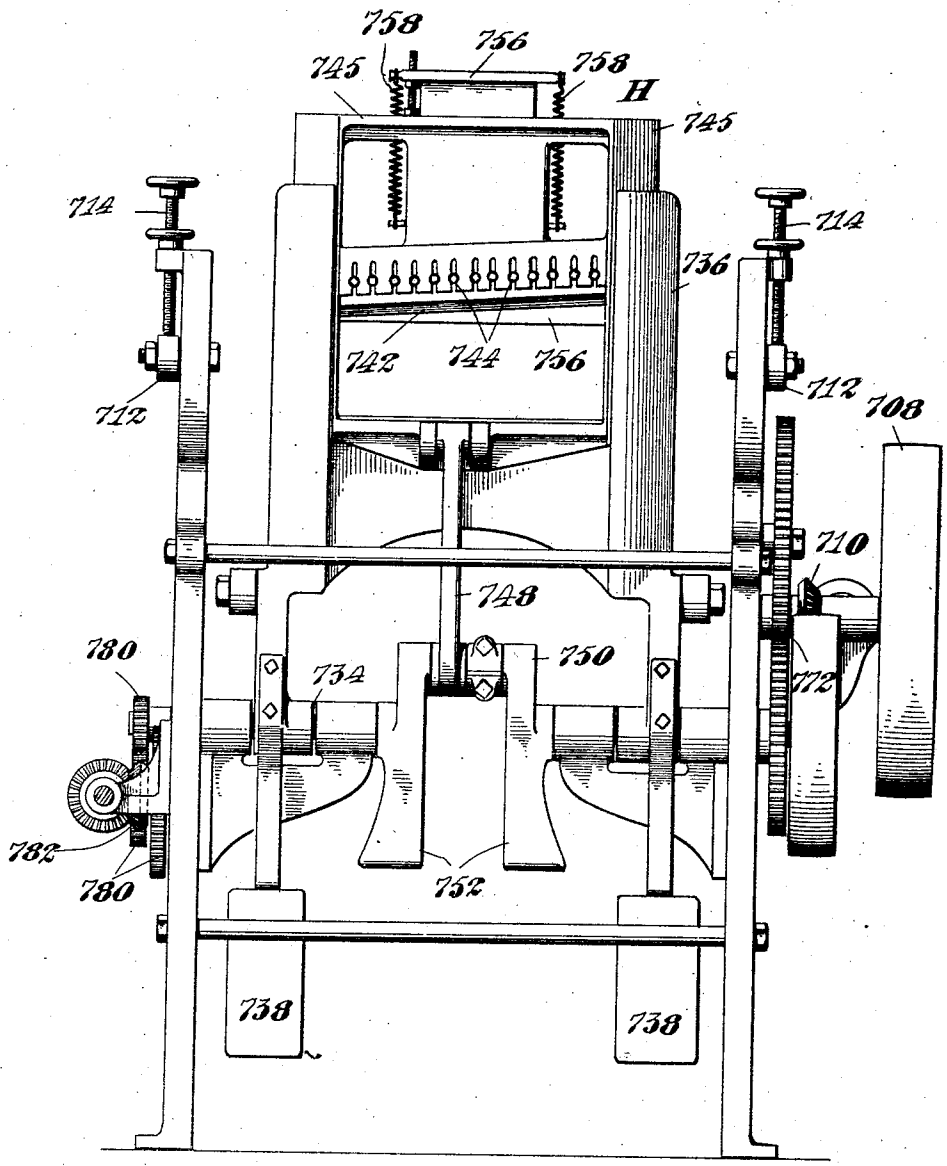

Fig. 42.

Inventor
William E. Elliott
By
Attorney

Feb. 16, 1926. 1,573,599

W. E. ELLIOTT

SYSTEM FOR MAKING PADS

Filed Dec. 27, 1919 42 Sheets-Sheet 28

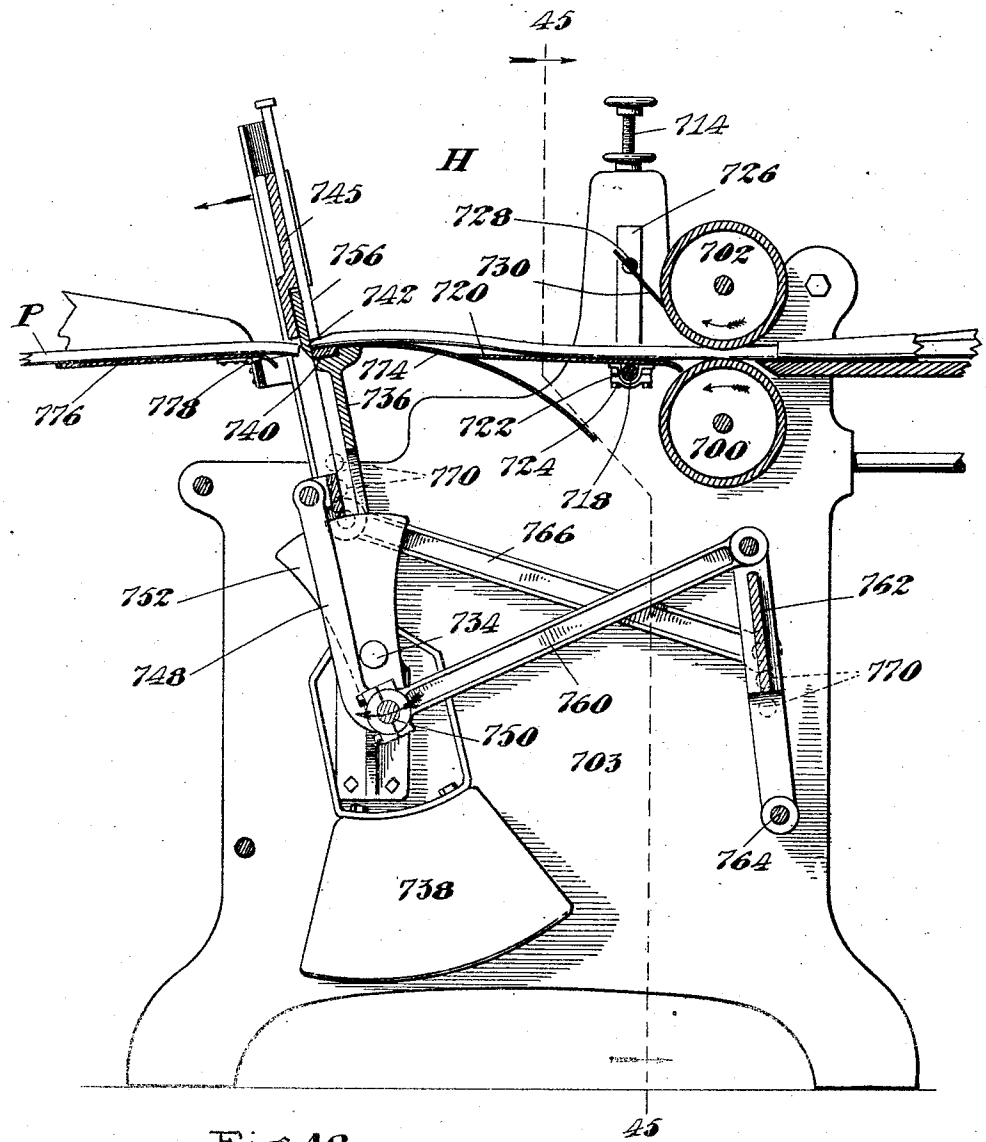

Fig. 43.

Inventor
William E Elliott
By Sylvanus A. Sibley.
Attorney.

Feb. 16, 1926. 1,573,599

W. E. ELLIOTT

SYSTEM FOR MAKING PADS

Filed Dec. 27, 1919 42 Sheets-Sheet 29

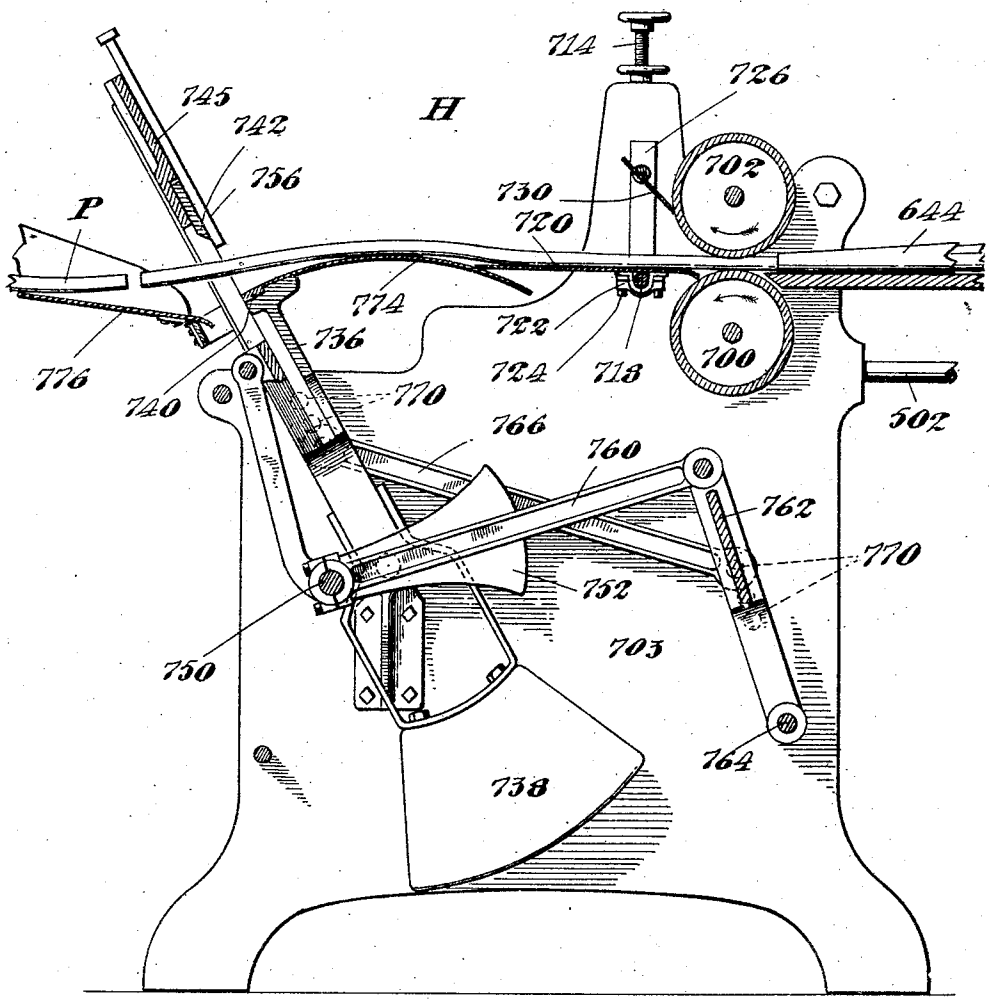

Fig. 44.

Inventor
William E. Elliott
By Sylvanus A. Cobb
Attorney.

Feb. 16, 1926. 1,573,599

W. E. ELLIOTT

SYSTEM FOR MAKING PADS

Filed Dec. 27, 1919 42 Sheets-Sheet 30

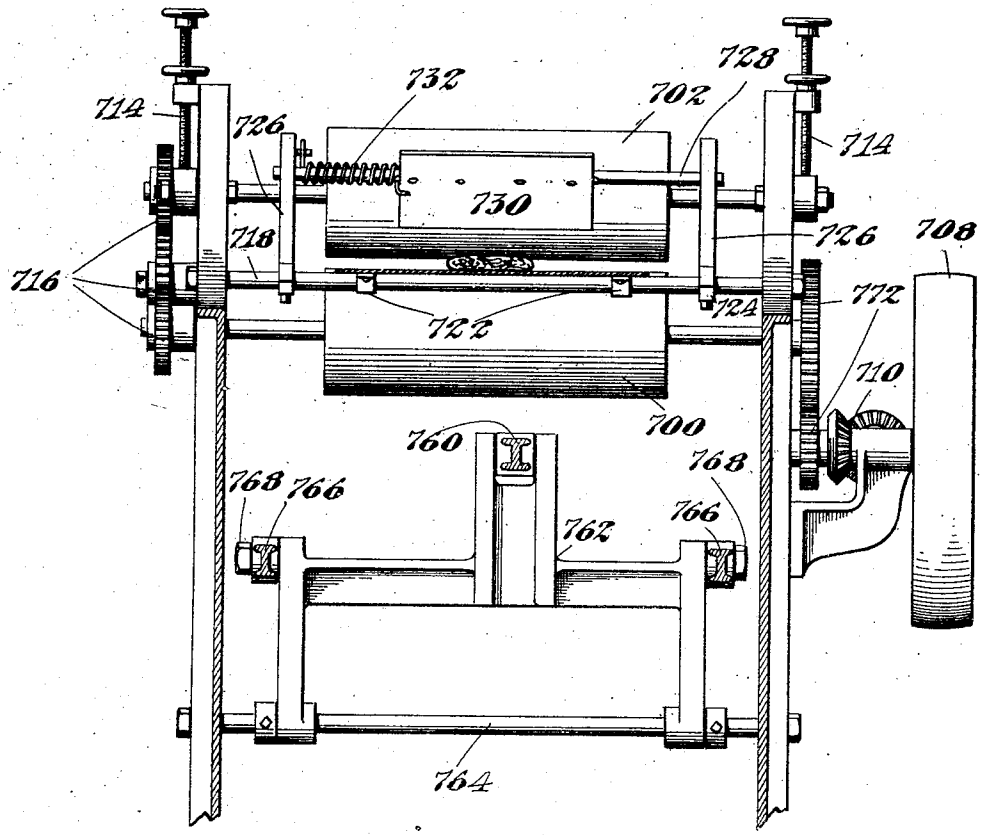

Fig. 45.

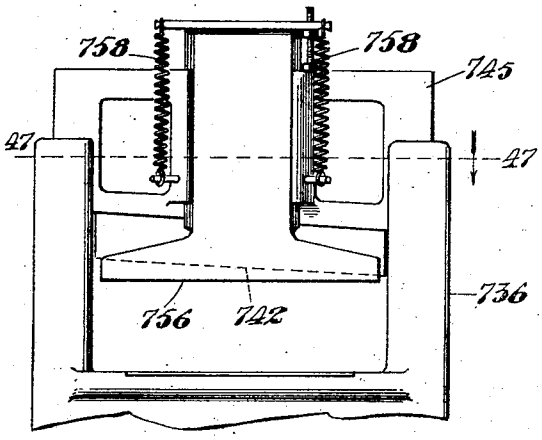

Fig. 46.

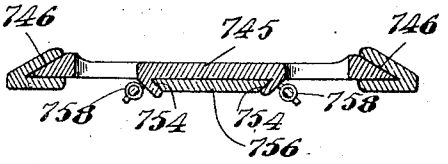

Fig. 47.

Inventor
William E. Elliott
By Lawrence H. Cobb
Attorney.

Feb. 16, 1926. 1,573,599

W. E. ELLIOTT

SYSTEM FOR MAKING PADS

Filed Dec. 27, 1919 42 Sheets-Sheet 31

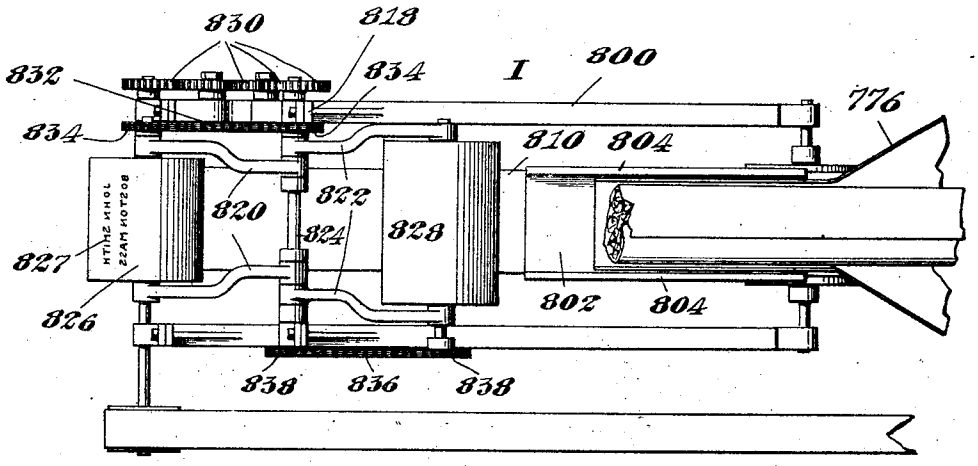

Fig. 49.

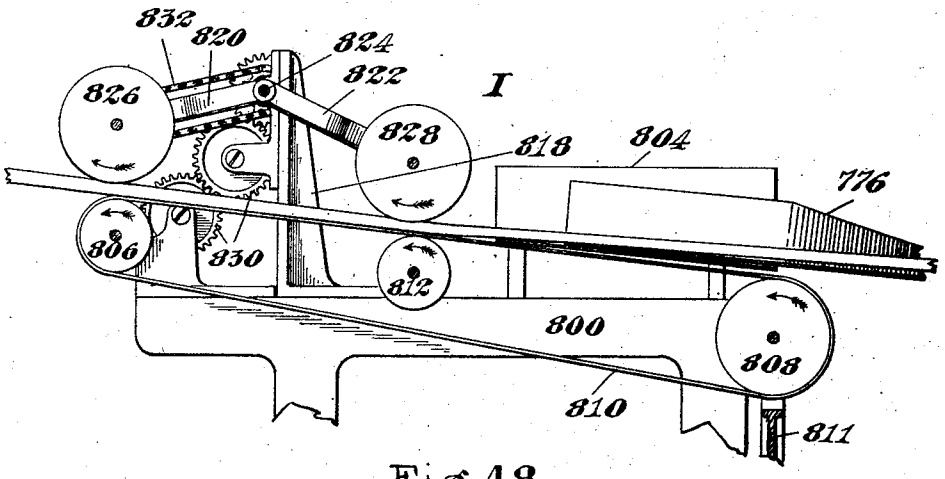

Fig. 48.

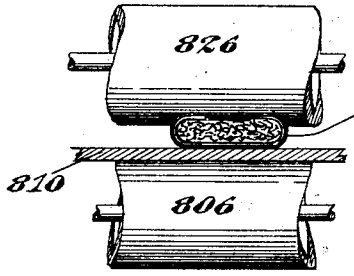

Fig. 50.

Inventor
William E. Elliott
By Sylvanus A. Smith
Attorney

Feb. 16, 1926. 1,573,599

W. E. ELLIOTT

SYSTEM FOR MAKING PADS

Filed Dec. 27, 1919 42 Sheets-Sheet 32

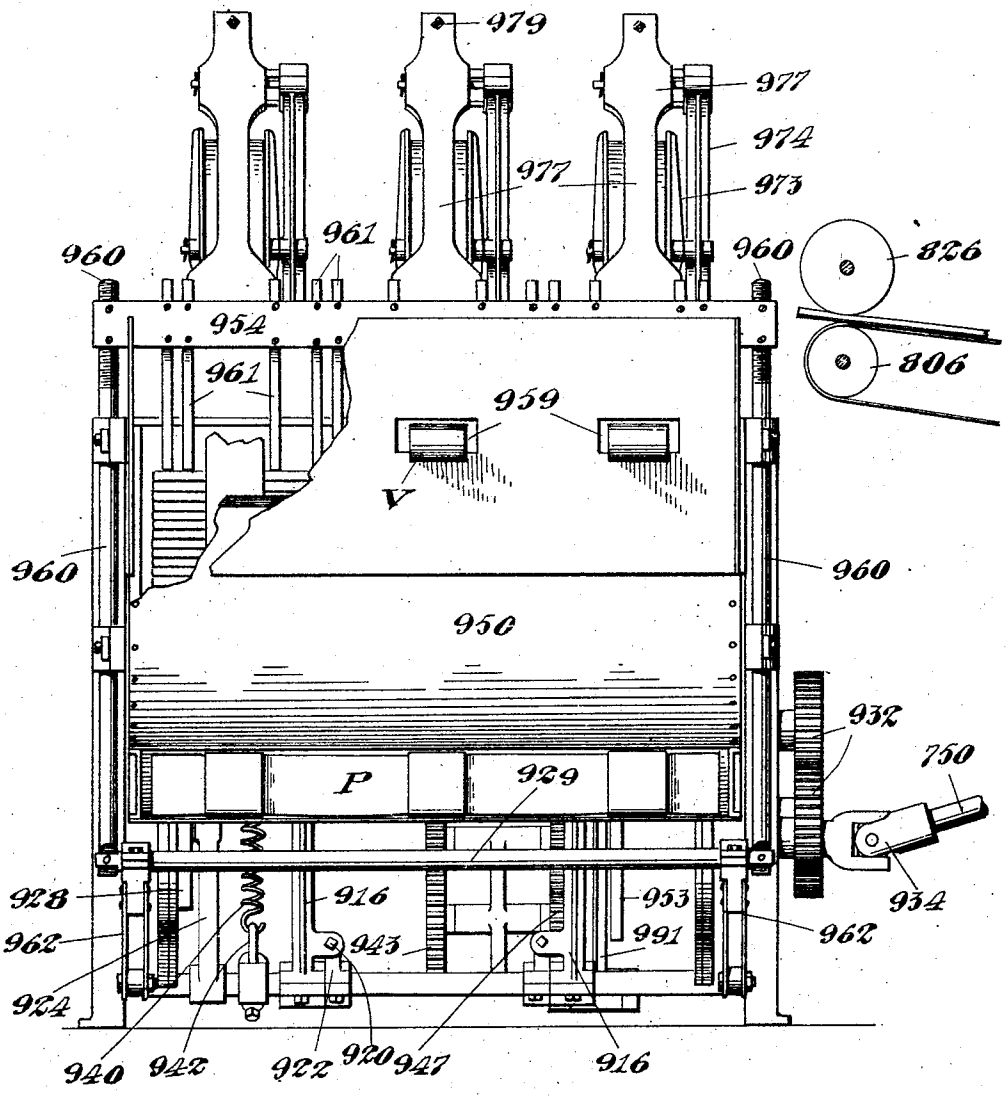

Fig. 51.

Inventor
William E. Elliott
By Sylvanus A. Cobb.
Attorney.

Feb. 16, 1926. 1,573,599

W. E. ELLIOTT

SYSTEM FOR MAKING PADS

Filed Dec. 27, 1919 42 Sheets-Sheet 33

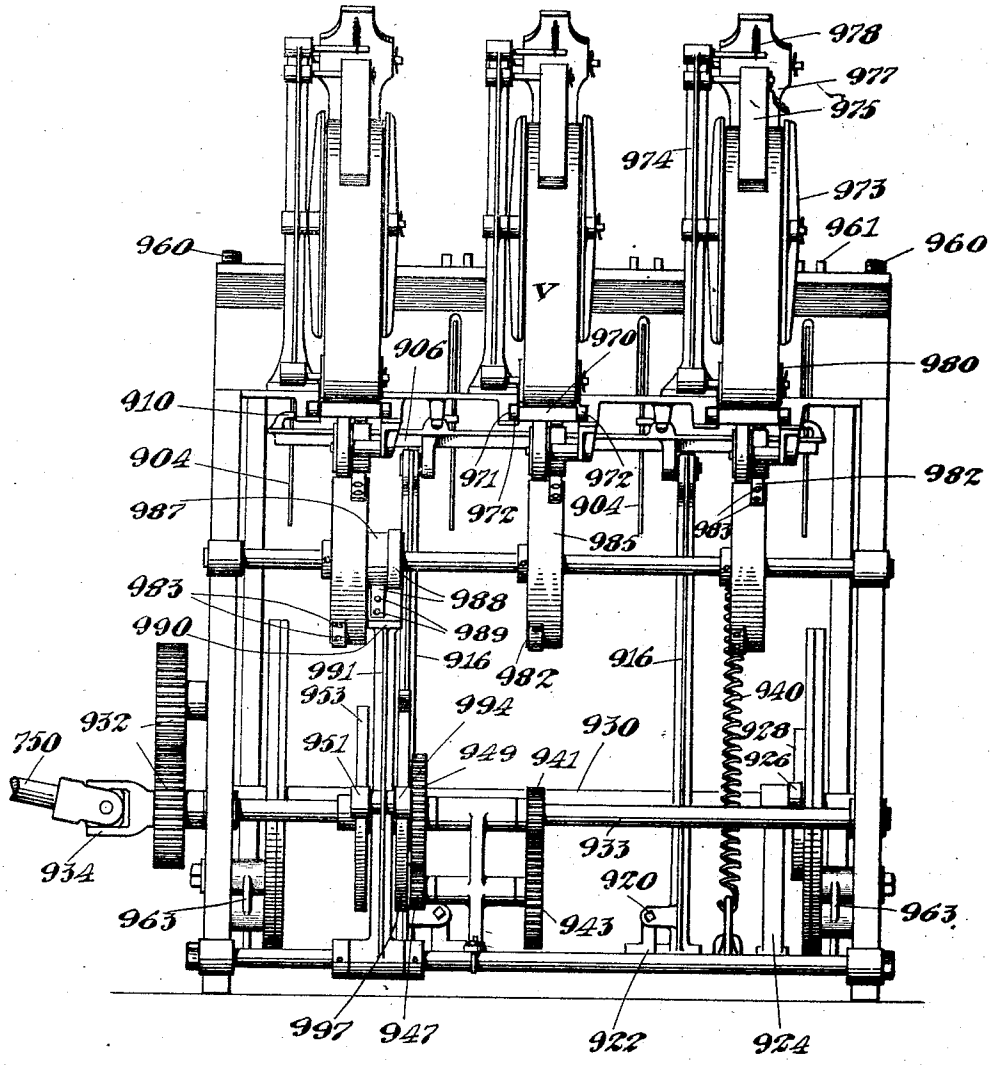

Fig. 52.

Inventor
William E. Elliott
By
Attorney.

Feb. 16, 1926. 1,573,599

W. E. ELLIOTT

SYSTEM FOR MAKING PADS

Filed Dec. 27, 1919 42 Sheets-Sheet 34

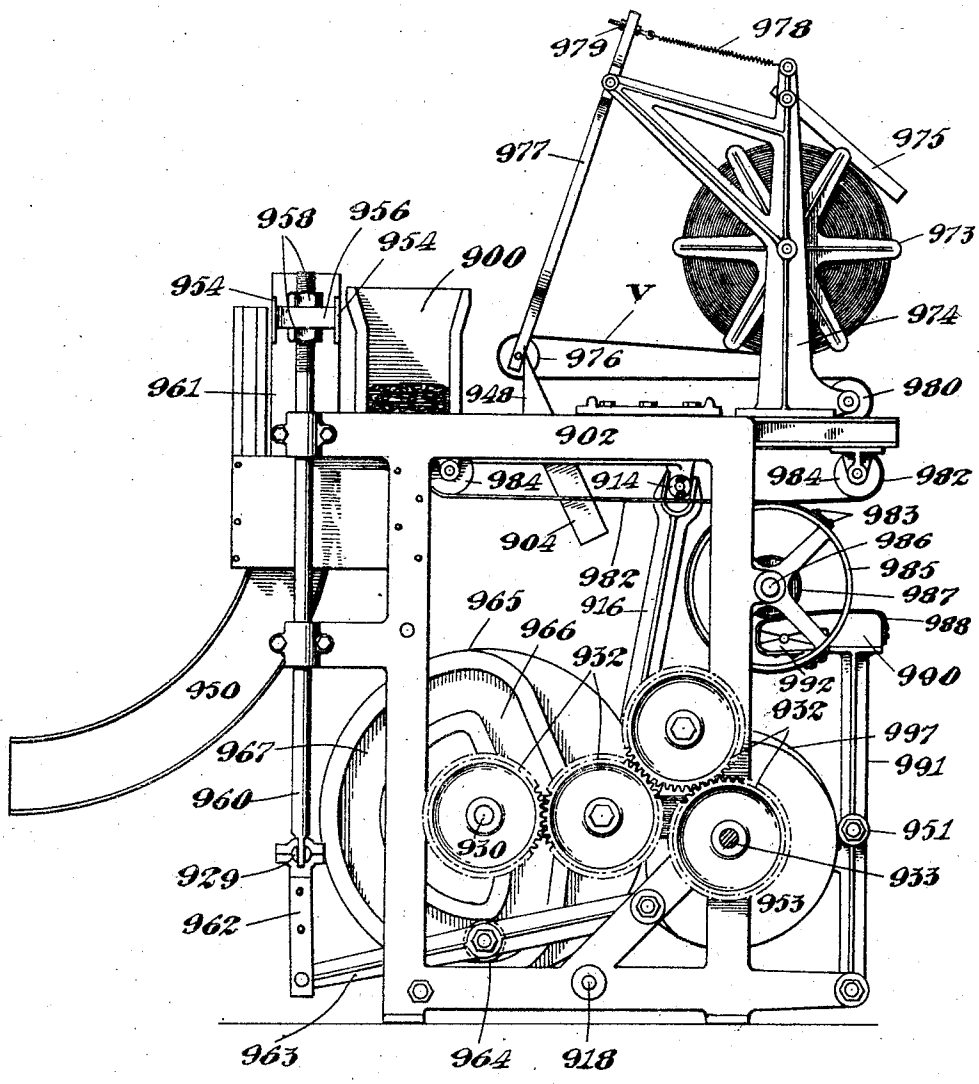

Fig. 53.

Inventor
William E. Elliott
By Sylvanus A. Cobb.
Attorney.

Feb. 16, 1926. 1,573,599

W. E. ELLIOTT

SYSTEM FOR MAKING PADS

Filed Dec. 27, 1919 42 Sheets-Sheet 35

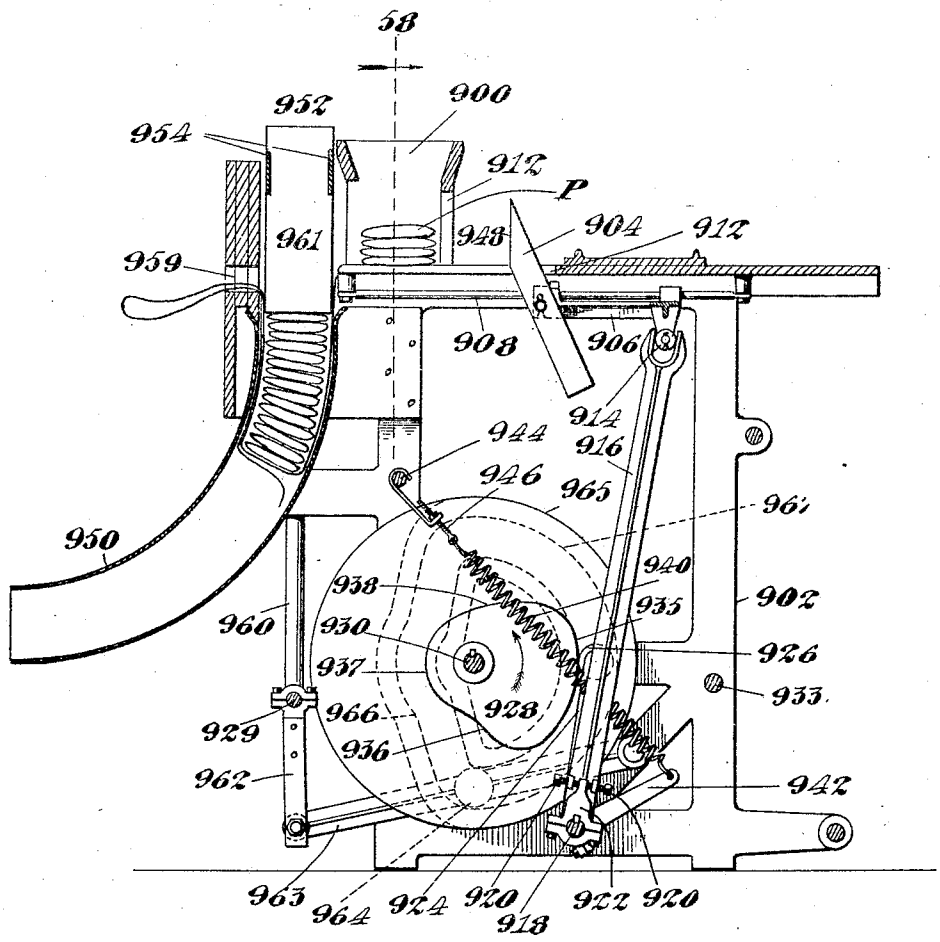

Fig.54.

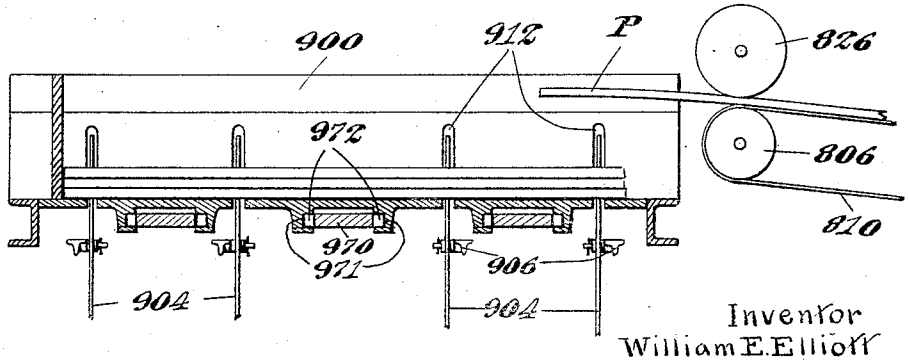

Fig.58.

Inventor
William E. Elliott
By Sylvanus A. Cobb
Attorney.

Feb. 16, 1926. 1,573,599

W. E. ELLIOTT

SYSTEM FOR MAKING PADS

Filed Dec. 27, 1919 42 Sheets-Sheet 36

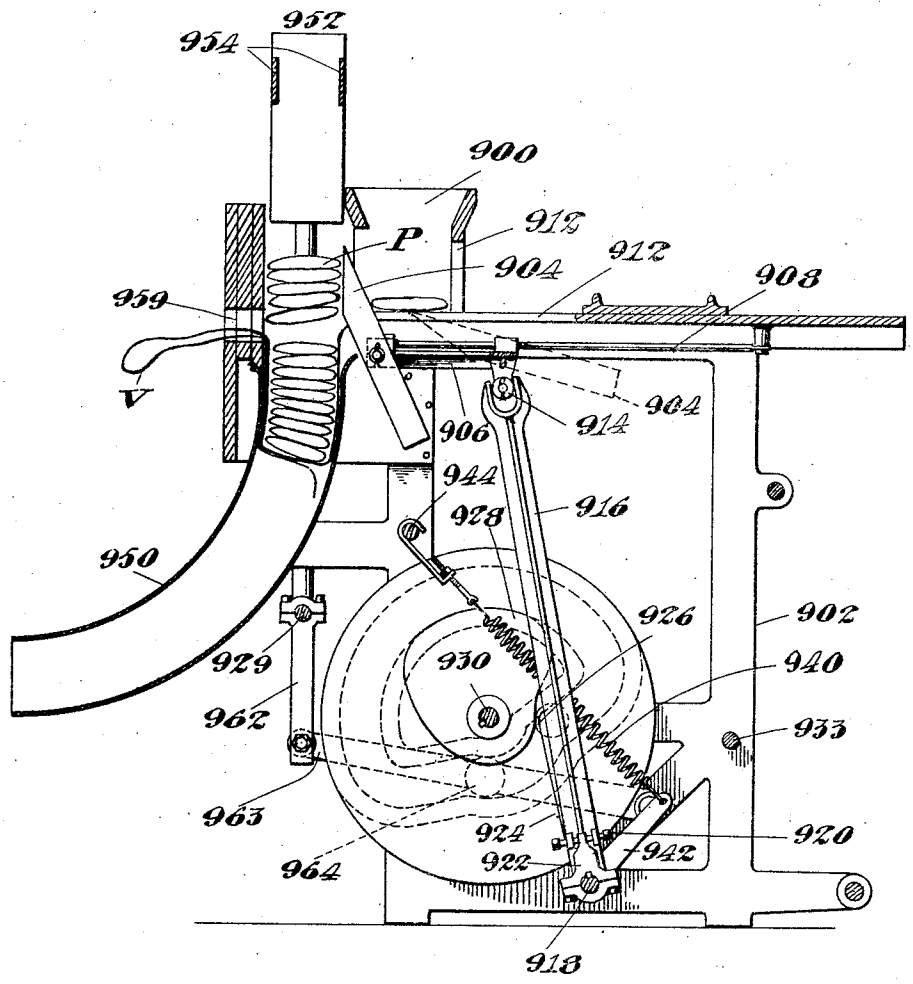

Fig. 55.

Inventor
William E. Elliott
By Sylvanus A. Cobb.
Attorney.

Feb. 16, 1926. 1,573,599

W. E. ELLIOTT

SYSTEM FOR MAKING PADS

Filed Dec. 27, 1919 42 Sheets-Sheet 37

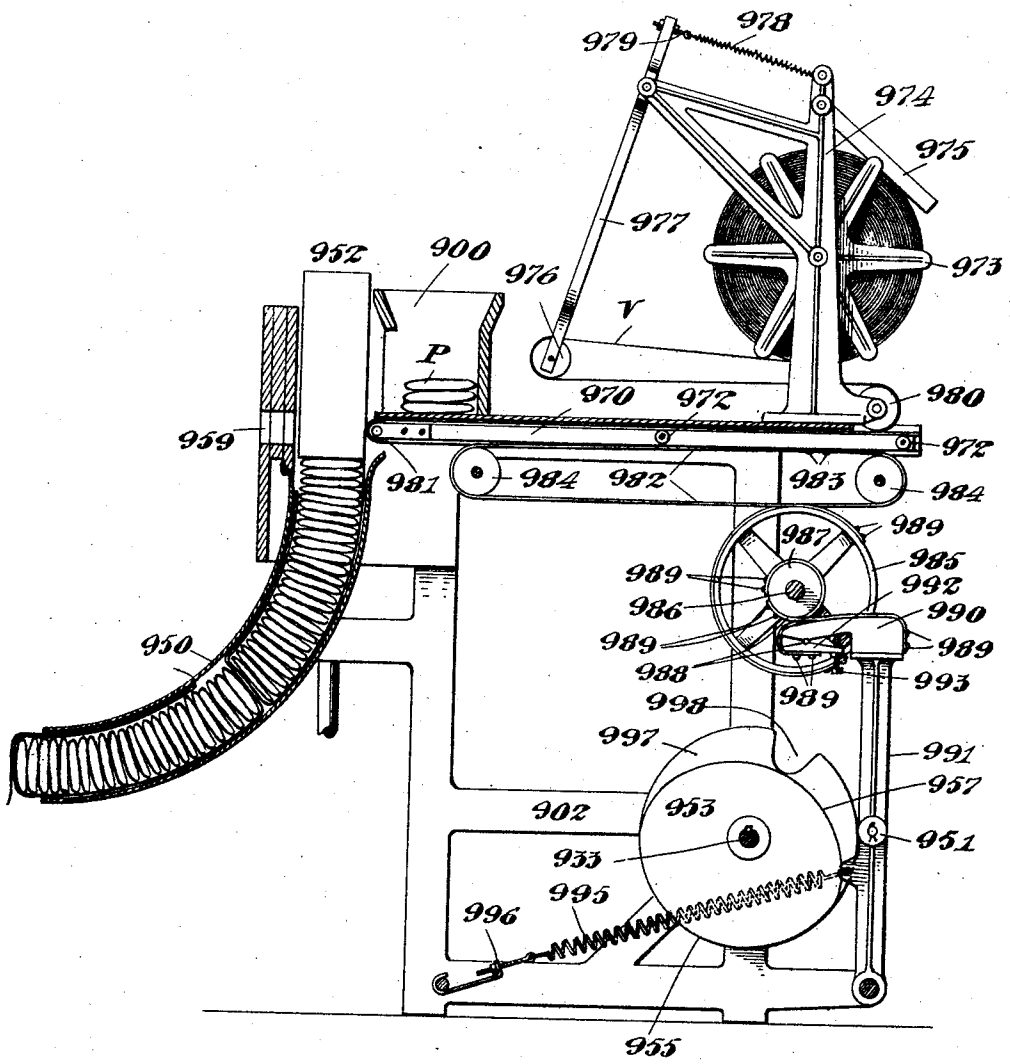

Fig. 56.

Inventor
William E. Elliott.
By Sylvanus H. Gibbs.
Attorney.

Feb. 16, 1926. 1,573,599

W. E. ELLIOTT

SYSTEM FOR MAKING PADS

Filed Dec. 27, 1919 42 Sheets-Sheet 38

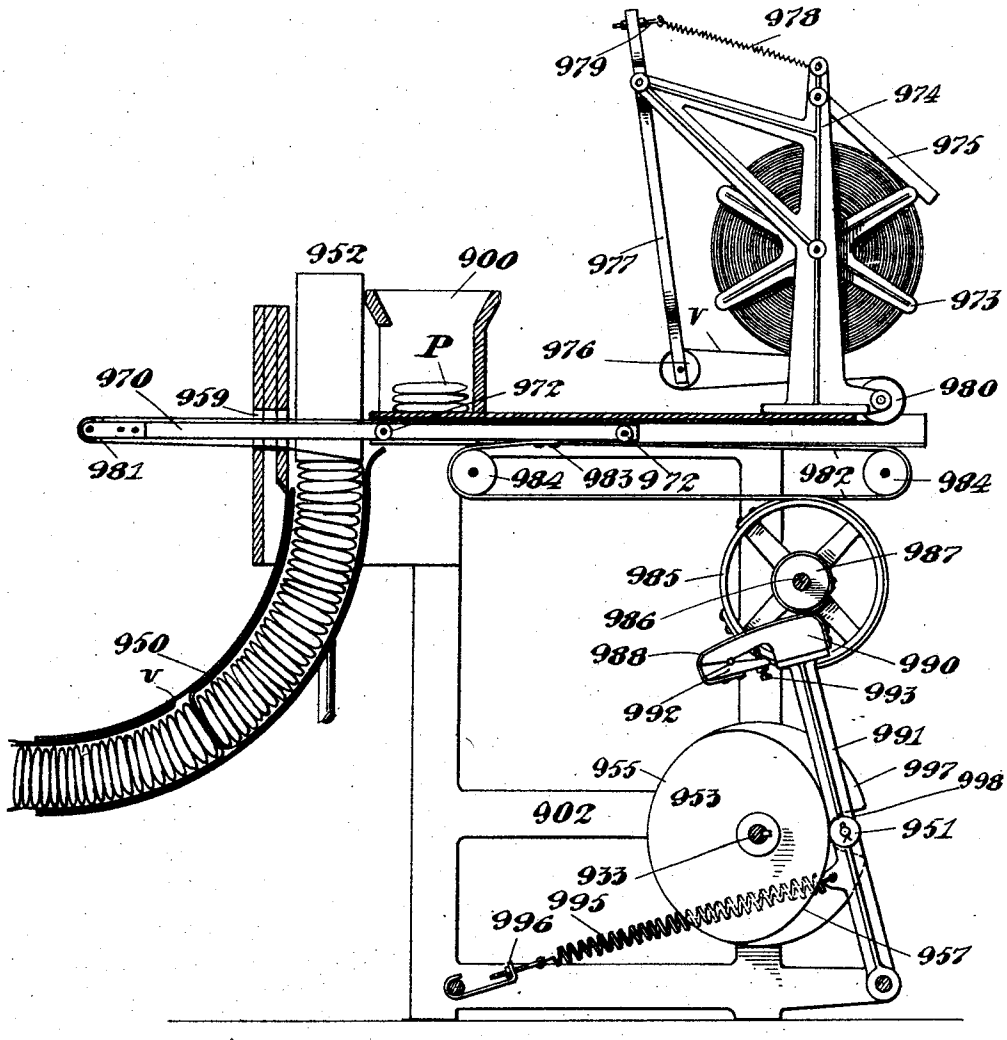

Fig. 57.

Inventor
William E. Elliott
By Sylvanus H. Cobb
Attorney.

Feb. 16, 1926. 1,573,599

W. E. ELLIOTT

SYSTEM FOR MAKING PADS

Filed Dec. 27, 1919 42 Sheets-Sheet 39

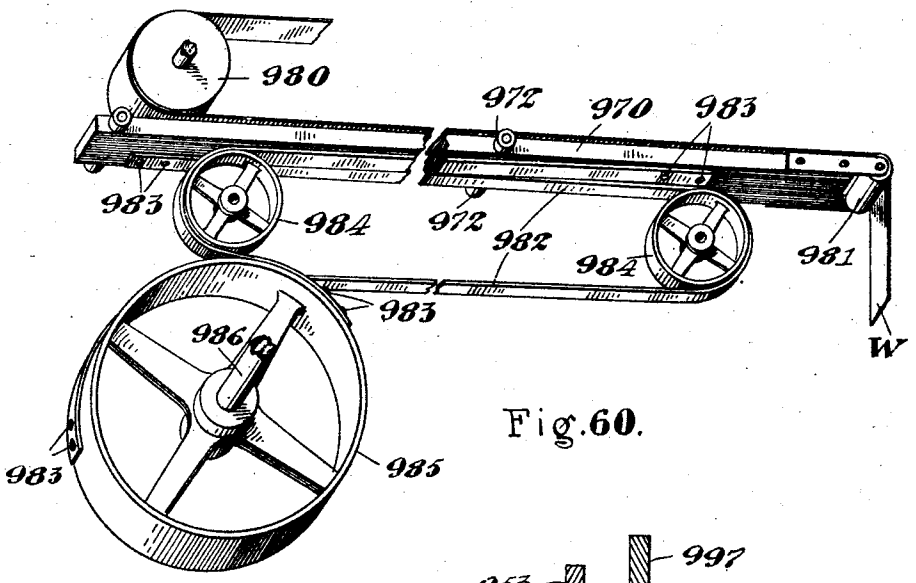

Fig.60.

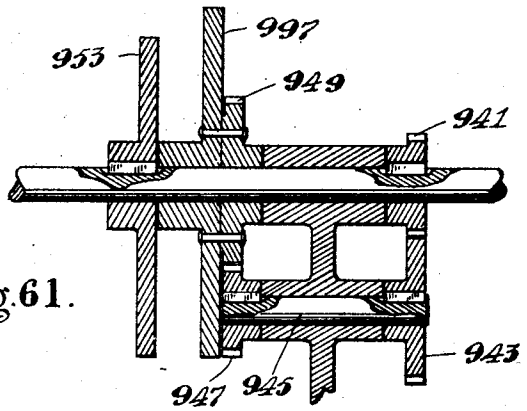

Fig.61.

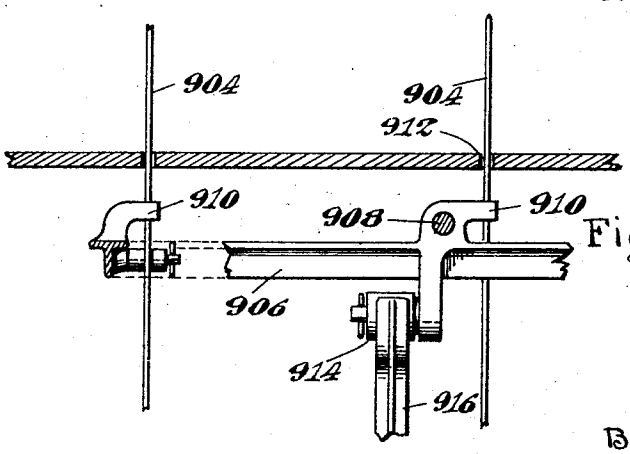

Fig.59.

Inventor
William E. Elliott
By Sylvanus A. Reed
Attorney.

Feb. 16, 1926. 1,573,599

W. E. ELLIOTT

SYSTEM FOR MAKING PADS

Filed Dec. 27, 1919 42 Sheets-Sheet 40

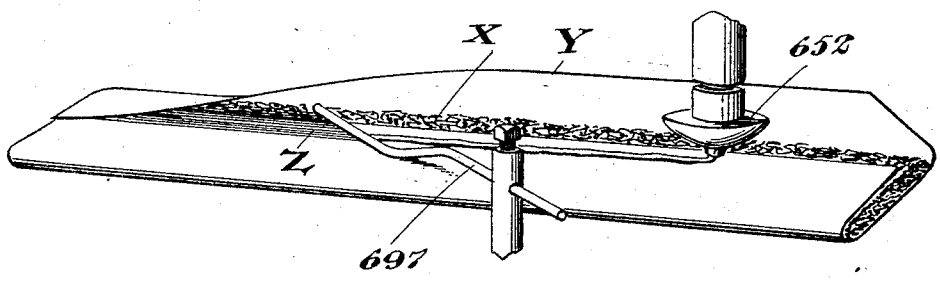

Fig. 62.

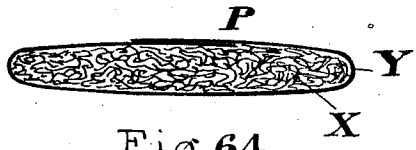

Fig. 64.

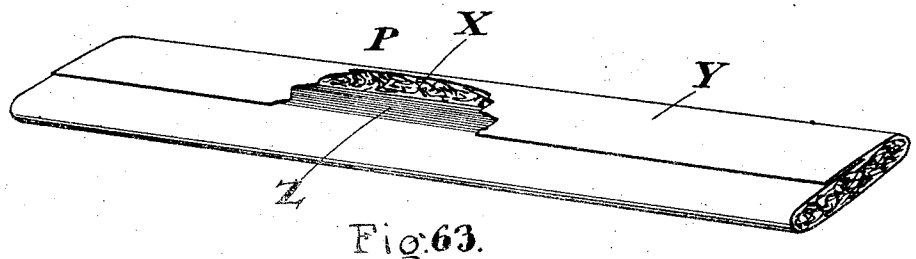

Fig. 63.

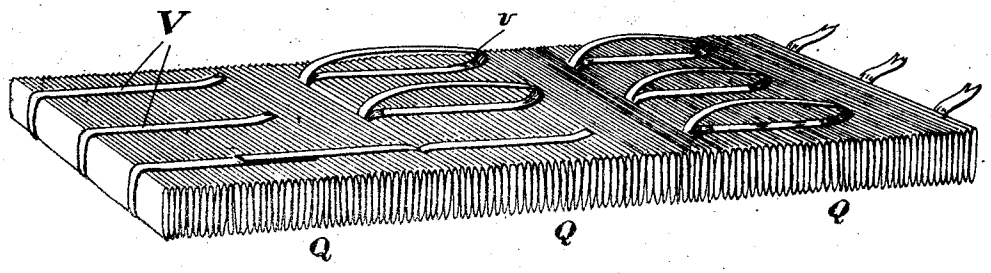

Fig. 65.

Inventor
William E. Elliott
By Schwarz & Cobb.
Attorneys

Feb. 16, 1926. 1,573,599

W. E. ELLIOTT

SYSTEM FOR MAKING PADS

Filed Dec. 27, 1919 42 Sheets-Sheet 41

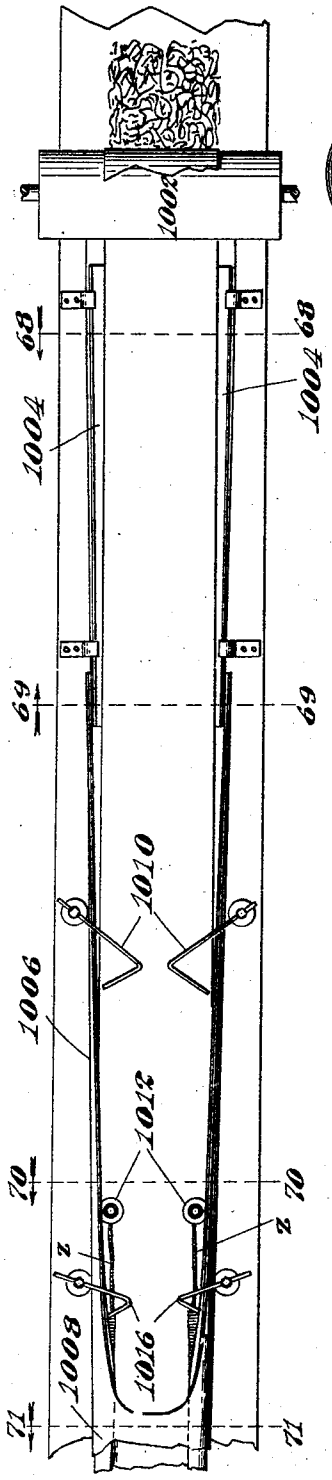

Fig. 66.

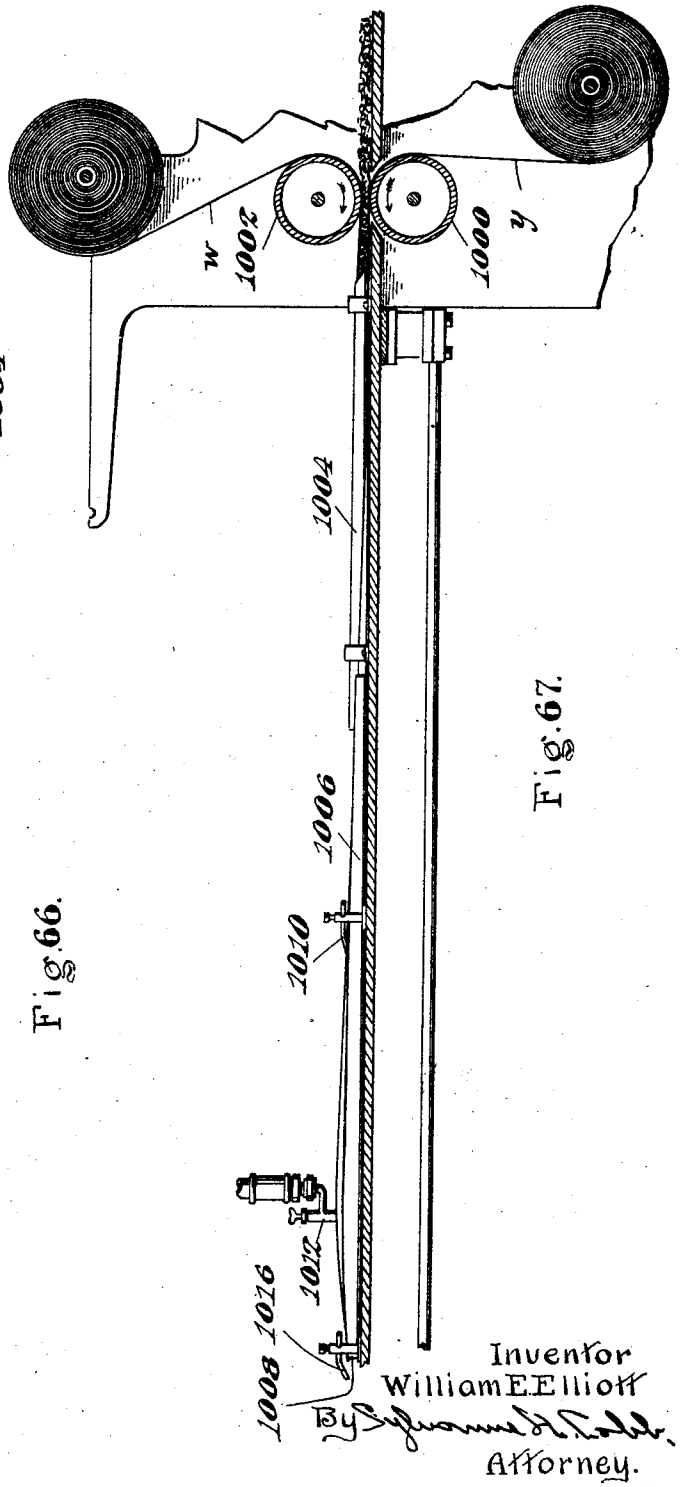

Fig. 67.

Inventor
William E. Elliott
By
Attorney.

Feb. 16, 1926. 1,573,599

W. E. ELLIOTT

SYSTEM FOR MAKING PADS

Filed Dec. 27, 1919 42 Sheets-Sheet 42

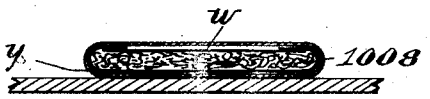

Fig. 71.

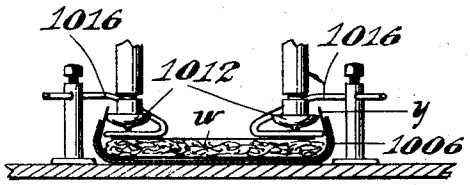

Fig. 70.

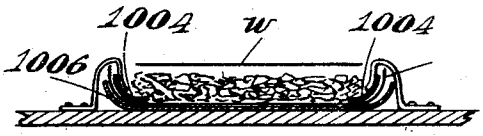

Fig. 69.

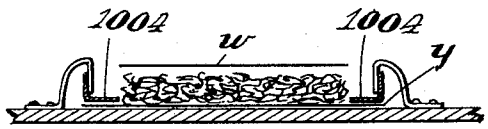

Fig. 68.

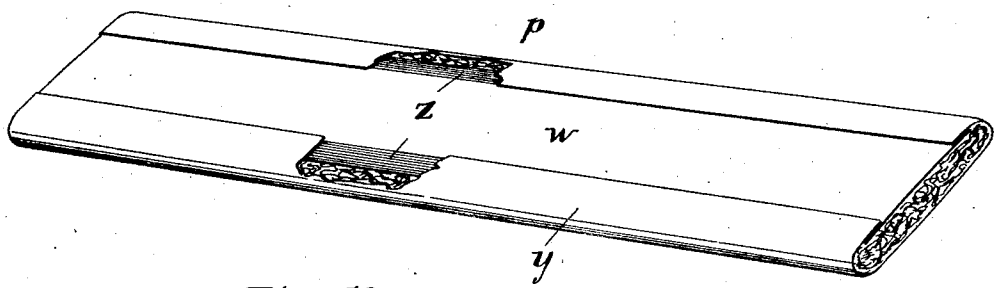

Fig. 72.

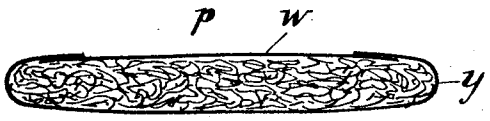

Fig. 73.

Inventor
William E. Elliott
By Sylvanus A. Cobb
Attorneu.

Patented Feb. 16, 1926. 1,573,599

UNITED STATES PATENT OFFICE.

WILLIAM E. ELLIOTT, OF LYNN, MASSACHUSETTS.

SYSTEM FOR MAKING PADS.

Application filed December 27, 1919. Serial No. 347,852.

To all whom it may concern:

Be it known that I, WILLIAM E. ELLIOTT, a citizen of the United States, residing at Lynn, in the county of Essex and State of Massachusetts, have invented a new and useful System for Making Pads, of which the following is a specification.

In the manufacture of pads consisting of a filler of yieldable fibrous material, as excelsior, straw, or the like, enclosed in some such wrapping as paper, an example of these articles being furnished by the pads employed for protecting furniture for shipment, it is customary to take the filling material from a loosely gathered bulk, as may be formed by excelsior accumulating in a bin from the machine producing it. Then this material is separated by workmen into portions, and arranged by them in an elongated mat or strip, as nearly uniform as their skill will permit, and this strip advanced to a wrapping mechanism, which encircles it with paper. Other operators cut the strip into sections of the desired lengths, and assemble them in the bales in which they are sold. Such procedure is slow, requires the services of a comparatively large number of attendants, and results in a relatively expensive product of varying density and elasticity, and therefore unsuited for its purpose. The object of my invention is to overcome these defects through the provision of a system by which highly resilient and uniform pads may be manufactured by a series of operations which are automatic in character, and in connection with which the few workmen required may be untrained. More particularly is it an object of this invention to utilize the fibrous material for the filler from a densely packed bale of small bulk, this reducing the space necessary for storing and the difficulties in handling. The manner in which these ends are attained will be made evident in the following description, and the novel features more particularly pointed out in the appended claims.

The accompanying drawings, in which similar elements are designated by like reference characters throughout, illustrate one of many embodiments which the present system may assume, together with a modification of one of its mechanisms. Here, Figures 1 and 2 show in a diagrammatic way the co-operating instrumentalities of my entire system, the sequential operations proceeding from right to left, and Fig. 2 continuing Fig. 1; Fig. 3 is a similar view, on a somewhat enlarged scale, of the filler-strip and pad-strip-forming portions of the system, together with the strip-cutting mechanism; Fig. 4 shows in side elevation the primary separator and the associated bale-feeder, this being taken upon the opposite side from that viewed in Fig. 1; Fig. 5 is an elevation of the opposite side of the primary separator; Fig. 6 is a top plan view thereof; Fig. 7 is a central, vertical, longitudinal section of the same mechanism; Fig. 8 is a longitudinal sectional detail through one of the separating rolls; Fig. 9 is a transverse section therethrough; Fig. 10 shows in elevation one of the actuating cams for this separating roll; Figs. 11 and 12 are sections through two sets of reducing-gearing on lines 11 and 12 of Fig. 6; Fig. 13 shows the secondary separator in side elevation, viewed as in Fig. 1; Fig. 14 is a longitudinal, vertical section therethrough; Fig. 15 is a partial top plan view and Fig. 16 a transverse, vertical section on line 16 of Fig. 13; Figs. 17 and 18 are enlarged longitudinal, vertical sections illustrating different positions of the pressure and separating bars; Fig. 19 shows in side elevation, as viewed in Fig. 1, the equalizing feeder to which the secondary separator delivers; Fig. 20 is a longitudinal, vertical section through this feeder; Fig. 21 is a section on line 21, Fig. 20; Fig. 22 gives a detail in section of another position of the feeding fingers from that seen in Fig. 20; Figs. 23 and 24 are elevations from opposite sides of the mat or filler-assembler; Fig. 25 is a longitudinal, vertical section through the same mechanism; Fig. 26 is a top plan view of the filler-former, with a portion of the pad-strip-former; Fig. 27 shows the same portions of the system in side elevation, as viewed in Figs. 1 and 2; Fig. 28 is a longitudinal, vertical section through the same; Fig. 29 is a side elevation of the paper-feed portion of the pad-strip-former; Fig. 30 is a detail in top plan of the adjustment for the paper-supporting roll; Fig. 31 shows in top plan the pad-strip-forming instrumentalities; Fig. 32 illustrates the same parts in side elevation, together with the glue-applying mechanism; Figs. 33 to 36, inclusive, are vertical, transverse sections on the lines 33, 34, 35 and 36 of Fig. 32; Fig. 37 is a top plan view of the glue-applying

mechanism; Fig. 38 is a central, vertical section therethrough; Fig. 39 is a detail in section of the glue-applying nozzle; Fig. 40 illustrates in side elevation as seen in Fig. 2, the pad-cutter and spacing-feeder to which it delivers; Fig. 41 is a side elevation of the mechanisms taken oppositely from Fig. 40; Fig. 42 is an end elevation of the pad-cutter taken from the right in Fig. 41; Figs. 43 and 44 are longitudinal, vertical, sectional details illustrating succeeding position of the cutting mechanism; Fig. 45 is a vertical, transverse section on the line 45 of Fig. 43; Fig. 46 shows the cutting knife and its pressure-member, viewed from the opposite side to that appearing in Fig. 42; Fig. 47 is a horizontal section on the line 47 of Fig. 46; Fig. 48 is a side elevation of the spacing-feeder, corresponding to the showing of Fig. 40; Fig. 49 is a top plan view thereof; Fig. 50 is a transverse, sectional detail of the rolls of the feeder, looking from the left in Fig. 48; Fig. 51 is a side elevation of the baler, as viewed in Fig. 2; Fig. 52 is an elevation as seen from the opposite side; Fig. 53 is an end elevation, looking from the right in Fig. 51; Figs. 54 and 55 are longitudinal, vertical, sectional, details of the baler, particularly illustrating the action of the feeding member; Figs. 56 and 57 are like views, but showing especially the action of the binding-strip-applier; Fig. 58 is a transverse, vertical, sectional detail on the line 58 of Fig. 54; Fig. 59 is a transverse, sectional detail showing the feeding members of the baler; Fig. 60 illustrates the binding-strip-applying mechanism in perspective; Fig. 61 is a sectional detail through the reducing-gearing of the baler; Fig. 62 shows in perspective the final step of wrapping the pad-strip; Fig. 63 is a perspective view of one of the pads with a portion of its wrapper broken away; Fig. 64 is a transverse section therethrough; Fig. 65 shows in perspective three of the bales with their bands; Fig. 66 is a top plan view of a strip-former adapted to produce a modification of the pad illustrated in Figs. 63 and 64; Fig. 67 is a longitudinal, vertical section therethrough; Figs. 68 to 71, inclusive are transverse sections on the lines 68, 69, 70 and 71, respectively, of Fig. 66; Fig. 72 is a broken perspective view of the modified pad; and Fig. 73 is a transverse section through this pad.

General outline (Figs. 1 and 2).

Considering first the general arrangement of the system, we have situated upon one floor or level a primary separator B adapted to receive the compacted fibrous material X and initiate a reduction to its constituent shreads; a secondary separator C, to which the primary separator delivers and which completes the reduction of the fibrous material; and an equalizing feeder D organized to advance the thoroughly separated but irregularly distributed material from the secondary separator in a slightly compacted body of substantially equal density and weight per unit of length. Connecting the upper with the lower level is an assembler E, acting to firmly interlace and uniformly mat together the fibers in preparation for the formation of a filler-strip. At the lower level, the assembler supplies the material which it has brought together to a filler-former F serving to compress the material in preparation for the application of its retaining covering. Beyond this is a pad-strip-former G, in which the filler is wrapped and glued; then a pad-cutter H for dividing the strip into sections of the proper length; and finally, supplied by a spacing feeder I, serving to increase the intervals between the pads, is a baler J. which divides the pads into groups or packages.

Bale-feeder and primary separator (Figs. 4 to 12, inclusive).

A table-like frame 100 has situated at one of its sides a vertical retaining wall 102, serving to guide a bale over its surface when advanced by feed-belts 104, of which three are shown. These belts are preferably equally spaced across the frame, running over end-rolls 106, 106 journaled beneath the frame, and similarly supported intermediate rolls 108, of which two may be employed. Motion is imparted to the belts to advance the bale, by a chain 110 operating over sprocket-wheels 112, 112 fixed upon the forward roll-shaft and upon a transverse shaft 114 journaled in a separator-frame 115. The shaft 114 is connected to a transverse shaft 116 by a series of idler-pinions 118 rotatable upon the outside of the frame 115. Upon the shafts 114 and 116 is fixed a series of separated rolls 120, over which operate toothed belts 122, the teeth of these projecting outward. Between the belts, the shaft 114 has fast upon it intermediate toothed rolls 124. At the upper portion of the frame 115, vertically above the shafts 114 and 116, are transverse shafts 126 and 128 carrying toothed belts 130 and toothed rolls 132 vertically alined with those upon the lower shafts. A series of pinions 134 compels the rotation of these shafts 126 and 128 together; while the series is driven by a chain 136 operating over sprocket-wheels 138, 138 upon the shaft 128 and upon one of the spindles of the lower series 118. The upper train 134, and consequently the lower series as well, through the chain 136, is rotated by a shaft 140 driven from a suitable source of power through a pulley 142 transmitting its motion to the shaft 128 by a multiple train of reducing-gearing. This, as illus-

trated, consists of a pinion 144 fast upon the shaft 140, and a gear 146 secured to the shaft 128, there being intermediate intermeshing pairs of integral gears and pinions 148 and 150. This produces an extremely slow feeding action of the belts 122, 130 and the rolls 124, 132, they moving, for example, at the rate of about four turns an hour for the rolls. The engagement of the roll-teeth with the bale fed prevents the slipping of the toothed belts upon their rolls, and insures a uniformly applied feeding force through the entire length of the belt at opposite sides of the bale.

The feeding apparatus just described urges the bale against a pair of separating rolls 152, 152 journaled across the frame 115 and being vertically spaced upon opposite sides of a horizontal plane near the axis of the bale. Beyond these rolls 152 is another pair of like separating and clearing rolls 154, 154, while beyond these are similarly situated directing rolls 156, 156. The rolls 152 and 154 are provided with reciprocatory teeth 158 arranged in series upon bars 161 within the cylindrical walls of the rolls. The bars are movable in radial slots in spiders 160 fixed upon the roll-shafts; and at the ends of the bars anti-friction rolls 164 enter cam-grooves 166 formed in plates 168 attached to the inner sides of the frame 115 at the ends of the rolls, the form of the grooves being such as to project the teeth through corresponding openings in the roll-walls during a part of each rotation, and withdraw them during other portions. All three pairs of separating, clearing and directing rolls are rotated from a source of power belted to a pulley 170 loose upon the shaft 172 of the lower roll 156. Associated with this shaft is reducing-gearing, including a pinion 174 attached to the pulley 170 meshing with a gear 176 fast upon the shaft 178 of the corresponding upper roll. Similar gears 180, 180 are fixed to the shafts 178 and 172. This gearing will transmit the rotation of the pulley 170 to the shafts at a somewhat reduced speed, though considerably greater than that imparted to the bale-feeding mechanism, say 100 turns a minute for the separating rolls 152. Rotatably connecting the lower and upper series of rolls are trains of gearing 182 and 184, respectively. The character of this gearing is such that the second pair of separating and clearing rolls 154 is turned at a somewhat greater speed than the first pair of separating rolls 152.

As the bale is forced by the feeder against the sides of the rolls 152, 152, which are at this point revolving upwardly for the top roll and downwardly for the bottom roll, the teeth 158 are projected through their openings in the roll-walls, and tear apart the fibers of the bale, carrying them outwardly at both sides, this separation diminishing the tendency for the fibers to again mat together. The lower roll, with its teeth still projected at its under side, passes the material along over a supporting roll 186, which is operated from the train 182 by gearing 188. The top roll feeds the reduced material beneath pressure-members 190 mounted upon arms 192 pivoted at 194 in the upper portion of the frame, and limited in their downward movement by a stop-rod 196 connecting the sides of the frame. Held up by the roll 186 and pressed down by the members 190, the partially separated fibers are subjected to the action of the rolls 154. As the teeth of the rolls 152 reach points adjacent to the rolls 154, they are withdrawn by their cam-grooves to avoid their carrying the material between the adjacent rolls. The teeth of the rolls 154 act similarly to those of the rolls 152, though traveling more rapidly along the now more yielding material, being projected by their cams to clear material from the spaces between them and the preceding rolls, and then to shread the material held to receive their action by the roll 186 and the pressure-members 190. As the shreaded material travels from these rolls under the influence of their teeth, which are drawn within the roll-walls, as already described for the first pair 152, it comes under the influence of the directing rolls 156, the rotation of which is such as to carry the fibers away from the spaces between them in the adjacent rolls and over a chute 198, into which it falls.

Secondary separator (Figs. 13 to 18, inclusive).

While the primary separator effectively reduces the bale, the result is not uniform, portions of the fibers being bunched together in quite large masses, instead of being in individual shreads, or in small groups. To bring it all to the latter condition, the chute 198 communicates with the secondary separator C, the table 200 of which is mounted on an appropriate frame 201. Over this table operate toothed belts 202 supported at the extremities of the frame on rolls 204, 204. To cause the travel of the belts at a rate proportioned according to the delivery of material from the primary separator, a short driving shaft 206, rotated by a pulley 208 connected by a belt with the source of power, has fixed upon it a pinion 210 meshing with a large gear 212 fast upon a cam-shaft 214, both the shafts 206 and 214 being journaled horizontally at one side of the secondary separator-frame. From the cam-shaft rotation is communicated through a chain 216 co-operating with sprocket-wheels 218, 218 to a crank-shaft 220 journaled at the extremity of the frame 201 parallel to the two shafts previously mentioned. The

crank-shaft is connected by a series of gears 222 with the forward roll 204. Within the secondary separator frame are vertical carrier-frames 224, 224 connected by transverse upper and lower cross-rods 226 and 227, respectively. The frames are mounted near their extremities on bell-crank levers 228, 228 fulcrumed upon the main frame and having the forward ends of their arms which extend in a generally horizontal direction, pivoted to the carrier-frames near their upper corners. Their vertical arms are connected to move together by a link 229. The lower portions of the carrier-frames are similarly supported upon the main frame by pivoted arms 230. The forward bell-crank levers are fixed upon a transverse shaft 232, having secured to it, outside the frame 201, an arm 234 carrying an anti-friction roll operating in a cam-groove 236 in a disk 237 upon the shaft 214. Through this cam and lever mechanism, a substantially vertical reciprocatory travel is imparted to the carrier frames

Guided upon the rods 226 and 227 by loops 238 are series of bars 240, these series extending longitudinally of the secondary separator and there being a plurality of the series, here shown as four in number. The series of bars are separated from one another longitudinally of the main frame by fixed dividing bars 242, and have at their lower ends, above the carrier-belts 202, feet 244 with rounded pressure-surfaces. Springs 246 join the bars 240 with the lower rods 227, drawing the pressure-feet, when the frame is in its lowered position, yieldably against the partially shreaded material being advanced by the belts.

Between the pressure-bars 240 of each series, spaced therefrom by the dividing bars 242, are similar longitudinal series of oscillatory shreading or separating bars 248, I having illustrated three of these series. The separating bars are guided by loops 250 co-operating with the carrier-frame rods 226, and have at their lower ends toothed shreading feet 252. The bars 248 are oscillated about the rods 226 from the crank-shaft 220, which is counterweighted at 254 and is joined to the separating bars by a series of connecting rods 256. Between the rods 226 and the upper extremities of the bars 248 are springs 258, which, similarly to the springs 246, maintain the separating feet in yielding contact with the fibrous material operated upon.

Fig. 18 of the drawings shows the carrier-frames, and therefore the pressure and separating feet, at the highest positions. As the crank-shaft rotates, they descend together into co-operation with the material, as illustrated in Fig. 17. At this time, the feet 244 tend to hold the fibrous material against movement with the belts, while the feet 252, traveling past the pressure-feet, tear the fibers apart by the engagement of their teeth therewith. This brings the elements to the position illustrated in Fig. 14, which shows substantially the period of greatest separation between the co-operating pairs of feet. It is to be observed, that the relation between the succeeding pairs of the series is such that each separating foot at the forward extremity of its path delivers the material which it carries with it to the succeeding pressure-foot, which then, upon the next movement of the carrier-frame, holds it upon the belts to receive the action of its companion foot, and so on throughout the series, until, at the end, the reduction of the material to practically individual or loosely interlaced fibers is completed.

Equalizing feeder (Figs. 19 to 22, inclusive).

While the material, thus worked over, leaves the secondary separator C well divided into its constituent fibers, it varies much in its distribution along the table, being over some areas thin, and over some relatively thick. It therefore now passes under the influence of the equalizing feeder D, so that it may be presented uniformly to the mechanism which begins the formation of the filler-strip. This feeder has a frame 300, in which are horizontally journaled, at the opposite extremities, two rolls, one, 302, being rotatable in fixed bearings, while the other, 303, is mounted to turn in arms 304 pivoted on the frame. Acting upon the arms 304 are screws 306, allowing, by a change in the position of the arms, the distance between the rolls 302 and 303 to be varied, thus regulating the tension of belts 308 which are carried by the rolls. I have in the present instance illustrated three of these belts, spaced equally across the width of the frame 300. Lying in a plane above the rolls 302 and 303 is a second pair of rolls 310 and 312, the latter being journaled in pivoted arms 314, with adjusting screws 316 arranged to tension belts 318 corresponding in number and running parallel to the belts 308. To impart travel to these two sets of belts, the adjacent runs of which are spaced from one another and parallel, a driving shaft 320 is journaled transversely of the frame 300 near its top, and has fast upon it a pulley 322 driven from the source of power. The shaft 320 also has secured upon it a pinion 324 co-operating with a gear 326 upon a transverse parallel shaft 328. The shaft 328 is joined for rotation by sprocket-wheels 330, 330 and a chain 332 to the roll 310, thus causing the advance of the upper belts 318. A train of gearing 334 communicates the movement of the roll 310 to the roll 302, causing the lower belts to travel at substantially the same rate as the upper.

Fixed at each side of the supporting frame, just above the belts 308, are rails 336, 336 carrying a horizontal frame 338 provided with rollers 340 running upon the rails. The frame has rearwardly projecting arms 342, at the outer extremities of which are pivoted feeding-fingers 344, angular in form and having their upper arms limited in movement in an anti-clockwise direction, as viewed in Fig. 20 of the drawings, by a stop-portion 346, each arranged to contact with an upper adjacent surface of the corresponding arm 344. Fulcrumed at the top of the frame 300 is a lever 348, having at its lower end connection through a rod 350 with the finger-frame. A short distance below its fulcrum point, the lever bears an anti-friction roll 352, drawn against a cam 354 upon the shaft 328 by a spring 356. This spring extends from the lever to the frame, being provided at the latter point with an adjustment 358 for changing its tension. The fibrous material advanced from the secondary separator upon the belts 308 of the feeder D is acted upon to insure its presentation to the feeding-fingers 344 by rearwardly curved fingers 360 upon the roll 312, which also flatten down the fibers so that they may be better engaged by the fingers 344. When the frame 338 is in its extreme rearward position, as illustrated in Fig. 19, the fingers, upon forward movement of the frame, enter and feed forward the material between the belts, assuming at their farthest points of travel in this direction the positions illustrated in Fig. 20. Their motion is then reversed, they turning upon their pivots to permit them to be withdrawn from and moved over the top of the fiber until the beginning of the succeeding advance, when they are drawn down by engagement with the mass to enter it. Their rate of movement is considerably more rapid than the travel of the belts 308 and 318, so that they tend to pack the fibers between and against the frictional resistance of the latter, this continuing until such a degree of compaction is attained that the spring 356 yields. At this time the lever 348 is not given its full movement of oscillation by the cam 354, and the density of the mass between the belts is kept substantially constant, the fingers continuously forcing the fibers between the ingress extremities of the belts, packing them and ejecting them at the egress ends at a uniform rate and equalized in density.

Filler-assembler (Figs. 23, 24 and 25).

From the feeder D, the equalized mass of material enters a casing 400 of the mechanism E for assembling the fibers of the filler-strip in a preliminary way, this casing joining the upper and lower levels of the system. It is supported upon a standard 402 and upon rods 404 uniting this standard to a portion of the system to be later described. The casing has at 406 a throat, in which are rotatably mounted, upon horizontal spindles, upper and lower toothed feed-rolls 408 and 410, respectively. These rolls are joined by spur-gearing 412 and bevel-gearing 414 to a vertical shaft 416 mounted to turn upon the standard 402 and operated through bevel-gearing 418 from a longitudinal power-shaft 419 driven at a mechanism farther along in the series. The peripheral speed of the rolls 408 and 410 is not substantially different from the rate of travel of the belts 308 and 318, though preferably a little slower. The engagement of the teeth of the rolls 408 and 410 presents the material to and holds it for operation by a picker and blast-wheel 420. This last-mentioned wheel is preferably made up of heads 422, 422 separated upon its supporting shaft and connected by bars 424, in which are teeth intercurrent with the teeth of the rolls 408 and 410. The wheel 420 is rotated at a relatively high speed, 180 revolutions a minute having been used, by a pinion 426, driven through an intermediate idler-gear 428 and pinion 430 rotating together, from a gear 432 fixed upon the shaft of the roll 408. The teeth of the wheel 420 pick apart the uniformly massed and delivered fibers of the body emerging from and temporarily retained by the rolls 408 and 410, reducing it again to a loosely separated or shreaded condition, but now delivered in a uniform bulk, and project the fibres by virtue of the blast which the wheel creates, down through the casing, the air emerging from openings in the casing near rolls 434 and 436 journaled horizontally at its lower portion, and near the front and rear sides. The roll 436 may be adjusted as to its distance from its companion roll by screws 445 acting upon its bearings. As the air separates from the fibers, they are again packed together upon the receiving surfaces of the rolls and are seized by them and extended into a strip, the downward movement of which between the rolls is facilitated by teeth 438 carried by the roll 436 and bent backwardly with respect to the direction in which it turns. The roll 434 is rotated from the lower feed-roll 410 by a chain 440 engaging sprocket-wheels 442, 442, and movement is communicated from the roll 434 to the roll 436 by a series of spur-gears 443, mounted to allow the adjustment of the roll last mentioned. The rate at which these lower rolls rotate is such as to cause the passage of the material between them at the speed at which it is found feasible to produce the filler-strip, this being, for example, about 8,000 feet an

hour. There is therefore fed forward over a chute 444, below the rolls 434 and 436, a mat of uniform density, at a rate upon which it is to be acted by the succeeding mechanism.

Filler-former (Figs. 26, 27 and 28).

From the chute 444 the somewhat loosely matted ribbon is projected upon a table 500 of the forming mechanism F, the elements of which are supported upon frame-rods 502, 502 extending horizontally from the casing 400 along the mechanisms F and G, and terminating and being sustained by the mechanism H. Carried by the rods 502 and extending transversely of the table 500 near its opposite extremities are bars 504, 504, having at their sides horizontal ways 506, in which are adjustably secured, by bolts 508, pairs of brackets 510. The rear brackets carry vertical spindles of idler-rolls 512, 512; while in the forward pair are journaled vertical shafts 514 of rolls 516, 516, the latter rolls being rotated by bevel-gearing 518, 518 from a transverse shaft 520. A chain 522, operating over sprocket-wheels 524, 524, joins the shaft 520 to a shaft of the succeeding mechanism G. Extending about the rolls 512 and 516 are opposite belts 526, 526, contacting at their lower edges with the table 500. The width of the space between the belts decreases from the delivery end of the chute 444, the belts converging to guide-rolls 528, 528 journaled for rotation about vertical axes in arms 530 secured to the tops of carriers 532 mounted upon the rods 502. Between the carriers and arms are slotted connections 534 to allow the distance between the belts to be varied. Beyond the rolls 528, the adjacent runs of the belts preferably extend in parallelism, their separation, however, being variable according to the width of the filler-strip which it is desired to form by the movement of their roll-brackets 510 in the ways 506. The gearing 518 is splined to the shaft 520 to permit this adjustment. Between the ends of the belts, projecting through slots in the table 500, are bed-rolls 536 and 538 spaced from one another along the belts. Above the roll 536 is a roll 540, and the roll 538 has a corresponding roll 542, both the rolls 540 and 542 being journaled in pairs of arms 544 pivoted upon the frame. The upper rolls float, or rest by gravity, upon the strip of filler, pressing it against the bed-rolls. Both pairs of rolls are rotated from an intermediate shaft 546, driven by bevel-gearing 547 from the shaft 419, the shaft 546 turning in bearings 548 hung upon the rods 502. To this shaft 546 the rolls 536 are joined by trains of gearing 550 and 552, respectively; while between the rolls 536 and 538 and their co-operating rolls are series of gears 554 and 556, respectively, these last-mentioned being arranged to permit the rise and fall of the rolls they actuate.

As the mat of material passes from the chute 444 between the converging belts 526, it is gradually compressed to a width equal to the distance between the guide-rolls 528, and then, upon coming under the action of the rolls 540 and 542, is reduced in thickness to a dimension determined by the spacing between these rolls and the co-operating bed-rolls. Therefore, the filler-strip leaves the forward end of the table 500 in not only a condition of uniform density per unit of length, for example, about four ounces for each forty inches, but also of substantially regular cross-section, this approximating that of the pad-strip which is to be made.

Pad-strip-former (Figs. 26 to 39, inclusive).

The table 500 of the filler-strip-former is extended by a table 600 of the pad-strip-former G, which is supported by a frame-section 601 of the last-named mechanism and by the rods 502. Upon this table the pad-strip is pushed by the rolls 538 and 542, and is received between a bed-roll 602 and a pressure-roll 604, respectively located in the general planes of the rolls 538 and 542, and having their axes extending parallel thereto. The roll 604 is journaled in arms 606, 606 pivoted upon the frame-section 601. This allows the roll 604 to be adjusted to different distances from the lower roll 602, it being fixed in the position desired by bolts 608 passing through curved slots 610 in and engaging the frame 601. The lower roll is journaled in the frame, driven by bevel-gearing 614 and spur-gearing 616, which reduces the speed of the parts driven from that of the shaft 419. The upper roll 604 is rotated from the lower through a series of gears 618 located upon the opposite side of the frame-section 601 from the gearing just described. A horizontally extending portion 620 of the frame-section has rotatably mounted adjacent to it pairs of supporting rolls 621, 621 arranged to carry, to turn freely thereon, the spindle 622 of a roll of wrapping material Y, which may be paper. The surface 620 is prolonged by horizontal arms 624, which allow the spindle to be rested upon them when the machine is supplied with a fresh roll of the wrapping material, depressions 626 near the outer ends of the arms guarding against the falling of the roll from the arms. The roll-spindle is adjustably held against opposite spring-pressure, so that it may be adjusted transversely of the frame and therefore correctly alined with the filler-strip by an arm 628 pivoted upon a bracket 630 mounted upon the frame-section 601. This arm has at its outer extremity an anti-friction roll 632 forced against the adjacent end of the

spindle 622 by a screw 634 threaded into a lug projecting upwardly from the arm 628 and arranged to turn in the outer end of the bracket 630. The paper, passing from the supply-roll over the lower or bed-roll 602, is thrust forward with the filler-strip as this is pressed upon it by the roll 604. It is at its edges outside the filler-strip held down by angular guide-walls 636, 636, spaced from one another laterally across the table, along which they extend for a considerable distance in the direction of feed of the filler-strip and paper, they being supported by brackets 638. At their forward ends, the walls 636, 636 converge and are transversely curved, being received within a correspondingly curved and axially alined forming trough 640 secured upon the table 600. Between the guide-walls and the forming trough are spaces into which the paper enters. The forming trough has transversely curved sides which also converge in the direction of feed of the strip and paper, terminating in a flattened oval egress-throat 644. In this convergence, one side of the trough at 642 is curved over the path of the strip more than the other, as is made evident by Figs. 31 and 36 of the drawings. Consequently, the paper at one side is first bent or folded over the filler-strip, and then, near the entrance portion of the closed throat, the other side, so that said strip is completely wrapped in the paper. Near the beginning of the overhanging curved portion of the trough, a pressure-finger 646, cooperating with the trough-wall to fold over the paper, is adjustably clamped upon a post 648 projecting upwardly from the table 600, by a screw 650. The finger extends across the wall adjacent to its mounting over the filler-strip into proximity with the opposite wall, not only assisting in the folding operation, but also holding down the filler-strip as the paper is wrapped about it.

Just before the now partially formed pad-strip enters the egress-throat 644, it has applied to it, between the folded edges, an adhesive, preferably consisting of glue, indicated at Z. This glue is delivered by a nozzle 652, from which it is most successfully jetted under pressure from a hermetically closed tank 654. This tank is mounted upon an arm 656 adjustable in ways 658 upon the forward side of a bar 660 extending transversely of the table 600, and secured to brackets 662 fastened upon the rods 502. Through the arm 656 is threaded a screw 664 rotatable in lugs 666 upon the bar. At one extremity of the screw is a hand-wheel 668, which when turned causes the travel of the tank-arm in its ways, and consequently an adjustment of the nozzle with respect to the fold of paper which is to be glued. Within the tank is a receptacle 670, spaced from the outer wall by a chamber 672 containing a heated liquid, as water, the temperature of which may be read upon a thermometer 673. This liquid maintains the glue in a properly fluid condition. The desired temperature of the liquid in the chamber 672 may be obtained by a heating device, conveniently consisting of resistance-coils 674 contained in a base 676 by which the tank is supported upon the arm 656, current being delivered to these coils from a suitable source through supply-conductors 678. The glue in the inner receptacle is so mixed as to be uniformly fluid by a stirrer 680 journaled in the top of the tank and in a hanger 682 depending therefrom, it receiving rotation through worm-gearing 684 driven by a pulley 685 belted to the power-line. The height of the adhesive in the receptacle is indicated by a float-rod 686 projecting through the tank cover into a transparent tube 687 rising therefrom. Compressed air is supplied to the upper portion of the receptacle 670 through a pipe 688 to force the glue through the nozzle, the amount of pressure being indicated by a gage 689 opening through the cover. To facilitate the introduction of fresh portions of the adhesive while the receptacle is under pressure, I prefer to provide an auxiliary tank 690, having at its top a filling-opening hermetically closed by a screw-plug 691. Into the top of the auxiliary tank a branch-pipe 693 enters, conveying air-pressure from the pipe 688, while the lower portion of the tank 60 is connected with the main receptacle by a pipe 692. Valves 694 and 695 in the pipes 692 and 693, respectively, permit the passages through either of said pipes to be opened or closed. When the position of the rod 686 shows that an additional amount of glue should be supplied to the receptacle 670, the operator, with both valves 694 and 695 closed, may introduce through the auxiliary tank-opening with the plug removed such a quantity of glue as is desired. The plug is then returned, and the valves both opened. This balances the pressure, and allows the glue to flow by gravity from the upper to the lower receptacle, whereupon the valves are again closed. To provide for the proper quantity of glue ejected from the nozzle 652, it is provided with a needle-valve 696 to alter the size of the entrance to the discharge-passage.

Beyond the nozzle is a finger 697, similar in form and in its mounting to the finger 646. It is, however, shorter because of the less width of the pad-strip at this point, and contacts not only with the upper surface of the side of the strip of paper most turned over the filler-strip, but also with the line of glue which the nozzle has laid thereon. Therefore, it serves both to press down the paper upon the filler in the manner of its companion finger, and also distributes the

glue over the paper, some of this preferably being carried over upon the filler, so that when the paper is forced upon it, the two portions of the pad will adhere and prevent the displacement of the filler from its wrapping.

Pad-cutter (Figs. 40 to 47, inclusive).

From the tubular end 644 of the forming-trough, the formed pad-strip emerges to be seized by compressing and feeding-rolls 700, 702 of the pad-strip-cutter H. The roll 700, which is a bed-roll, is journaled across a frame-section 703, and is turned from a driving-shaft 704, journaled in the opposite sides of the frame, through spur-gearing 706. The shaft 704 receives power transmitted by a belt to a pulley 708 secured upon it. From the shaft 704 the shaft 419, extending back through the pad-strip and filler-former to the filler-assembler, is also rotated by bevel-gearing 710. The roll 702 is journaled in opposite arms 712, 712 pivoted upon the walls of the frame 703, these arms, and therefore the roll 702, being adjustable to vary the distance of the upper roll from the bed-roll, to provide for the proper pressure upon pad-strips of different thickness, by screws 714 threaded through the top of the frame and turning in the arms. The upper roll is rotated from the bed-roll through a series of spur-gears 716 mounted upon the opposite side of the frame from the gearing just mentioned. A little in advance of the rolls 700 and 702, a rod 718 extends across the frame-section just below the bite of the rolls. Carried to turn about this rod, with its edge in close proximity to the periphery of the roll 700, is an apron or guide-plate 720, held in place by yokes 722 surrounding the rod. This apron receives the end of the pad-strip as it is fed forward by the rolls 700 and 702, and supports it for delivery to the cutter mechanism. Supported by clamps 724 upon the rod 718 are upright bars 726, spaced from one another at each side of the rolls 700 and 702, and having rotatable in them, near their upper extremities, a rod 728. Fixed upon the rod 728, opposite the central portion of the roll 702, is a deflector or scraper 730, which removes from the roll any material that may adhere to it. This is of special utility in preventing the pad-strip, which may have some free mucilage upon its upper face, sticking to the roll and wrapping about it. A spring 732, surrounding the rod 728 and contacting with the scraper and with a pin upon one of the uprights 726, forces the rear edge of the deflector into contact with the roll 702.

Pivoted about a shaft 734 journaled in bearings near the bottom of the frame-section 703 is an oscillatory cutter-frame 736 counterweighted at 738 on the opposite side of the shaft from the frame. Fixed upon the frame in the general line of advance of the pad-strip is a leger-blade 740, with which co-operates a knife 742 inclined transversely of the frame 703 and adjustably secured at 744 to a carrier 745 arranged to travel in vertical ways 746 in the frame 736. The knife 742 is reciprocated in its ways by a connecting rod 748 articulated upon the carrier and surrounding a crank-portion 750 of the shaft 734, this crank being shown as having counterweights 752. In a central, upwardly projecting portion of the carrier 745 is a pressure-slide 756, having at its lower extremity a laterally extended contact-portion situated adjacent to the rear side of the knife. This slide is yieldably held normally in a line below the knife-edge by springs 758, 758 extending between the slide and the edges of the upwardly extending portion of the carrier. The crank 750 not only reciprocates the knife 742 in its ways, but also oscillates said knife by virtue of the movement of its frame 736 about the shaft 734. This is effected by a connecting rod 760 joining the crank with a rocker-frame 762 pivoted at 764 upon a rod connecting the sides of the frame at its rear. From points upon the rocker-frame intermediate its pivotal point and the connection of the rod 760, connecting rods 766 extend to the frame 736 above the shaft 734, these rods last mentioned preferably being adjustable in their connection, both to the frame 762 and the frame 736, by screws 768 which may engage any one of a series of openings 770 in said frames. By altering the connection of the rods 766 to the frames, the angle through which the knife-carrier-frame is oscillated may be varied, while the throw of the knife by the crank is maintained constant.

The shaft 734 is rotated at a speed which will cause the forward travel of the knife, under the influence of the crank and connecting rods upon its frame, at substantially the same rate as that at which the pad-strip is fed, by a train of gearing 772 from the roll 700. Oscillating with the frame 736, being fastened against movement thereon, is a downwardly and rearwardly curved receiving plate 774, upon which the forward edge of the apron 720 rests, these two elements bridging the space between the rolls 700 and 702 and the cutting mechanism in all positions of the latter. At the opposite side of the knife, a delivery-apron 776 is hinged at 778 to the frame 736, its forward extremity resting upon a table at the succeeding mechanism I.

When the knife-carrier-frame begins its forward travel from the right, as viewed in Figs. 43 and 44 of the drawings, the knife-carrier descends under the influence of the crank 750, first bringing the pressure-slide

756 into contact with the pad-strip to clamp it firmly upon the leger-blade, and then the knife, so that the latter passes through and severs the clamped strip to detach a pad P while it is advancing at the same speed as said strip. The completion of this operation is illustrated in Fig. 43. Before the oscillation in an anti-clockwise direction, as seen in this figure, is completed, the strip has been cut, and the knife and pressure-slide rise to free the pad. The oscillation is then reversed from the extreme forward angle illustrated in Fig. 44, and the frame oscillates in the opposite direction, or rearwardly, to make a fresh cut. During this time, the pad-strip has been advancing, fed forward by the rolls 700 and 702, so that when the knife 742 attains its extreme rearward position, a predetermined length of the pad-strip has been advanced, to enable the knife upon its succeeding operation to sever a definite length. This may be varied to cause the system to produce pads of different dimensions by the adjustments of the end connections of the rods 766. Figs. 43 and 44 show them in a position to provide for the maximum strip-feed for which the cutting mechanism is arranged. At the same time the rate of reciprocation of the knife is correspondingly altered by the substitution of gearing 772 of appropriate diameters.

Before leaving the pad-cutting mechanism, it is to be noted that the shaft 734, through reducing spur-gearing 780, bevel-gearing 782 and a universal joint 784, drives an inclined shaft 786 which transmits power to the baling mechanism J.

Spacing feeder (*Figs. 40, 41, 48, 49, and 50*).

The divided pads leave the cutter mechanism in a continuous series with their ends abutting. To provide an interval during which the baler J may operate, they now come under the influence of the feeder I, which spaces them from one another by accelerating their advance. A frame 800 has at its upper rear portion a short table 802, at each side of which are guiding walls 804, the end of the apron 776 being received upon the table and between its side walls. At the opposite extremities of the frame 800 are transversely journaled rolls 806 and 808, over which operates a belt 810 with its upper run supported by an intermediate roll 812 and inclined forwardly and upwardly at a substantial angle from the horizontal. The roll 806 is journaled in the frame, while 808 is mounted to turn in a verticle frame 811 pivoted at 813 upon the main frame-section 800. A spring 814 connecting the forward side of the main frame with the lower end of the pivoted frame through an adjusting device 816 maintains the belt 810 under tension, which may be varied as desired.

Rising above the frame 800 are standards 818, and near the top of these are pivotally mounted oppositely extending pairs of arms 820, 820 and 822, 822 pivoted about a transverse shaft 824 journaled in the standards. In the arms 820, and 822, respectively, are journaled rolls 826 and 828, which are respectively opposite the rolls 806 and 812, and by their weight bear upon the pads, tending to further press them into form and also to insure the adhesion of their glued surfaces. The roll 826 may, if desired, carry upon its periphery a die or other printing device 827, supplied with ink in any convenient manner, for the purpose of producing inscriptions upon the pads. In such case its circumference should be substantially equal to the length of said pads. The roll 806 is driven by a belt 850 from a pulley 852 fast on the shaft 734 through a train of spur-gearing 830, and imparts movement to the shaft 824, which in turn communicates its rotation to the roll 826 through a chain 832 and cooperating sprocket-wheels 834, 834. A chain 836 also connects the shaft 824, through its engagement with sprocket-wheels 838, 838, to the roll 828. The rate of travel of the belt 810 and the peripheral speeds of the rolls 826 and 828 under the influence of the gearing which has just been described is at a considerably higher rate than that at which the severed pads are pushed forward from the cutting mechanism by the rolls 700 and 702. In consequence of this, when the forward end of each pad is seized by the roll 828 and the adjacent portion of the belt, it is drawn quickly away from the succeeding pad and is projected forwardly and upwardly to the baler J by the roll 826 and the belt at a relatively high speed, producing an interval before the next pad is seized and ejected from the feeder during which the baler mechanism has an opportunity to functionate.

Baler (*Figs. 51 to 61, inclusive*).

The pads from the feeder I are thrown into a receiving chamber 900 of the baler J. This chamber is supported upon a frame-section 902, and is open at one side in alinement with the line of travel of the pads from the feeder I. Because of the upward projection of the pads under the impetus received from the inclined belt and the forward roll of the feeder, they fall one upon another in a pile in the chamber 900. Movable transversely of the frame-section is a series of feeding fingers 904, four of which are here illustrated, these fingers being pivoted upon a carriage 906 movable horizontally at the upper portion of the frame-section upon rods 908 spaced from one an-

other just below the top of the frame and fixed upon depending lugs. The weight of the fingers is so distributed that they are held normally against stops 910 integral with the carriage with their upper ends projecting through slots 612, which extend along the top of the frame into the chamber 900. Turning upon hangers beneath one end of the carriage 906 are anti-friction rolls 914 engaged by the forked portions of levers 916, 916 arranged to turn loosely through a limited angle upon a shaft 918 journaled longitudinally of the frame-section 902. The levers are held to turn with the shaft in adjustable angular relation to permit a variation in their extremes of travel, by opposite screws 920, 920 threaded through lugs upon each lever, and engaging at their adjacent ends a short arm 922 keyed upon the shaft 918. The shaft and levers are oscillated by an arm 924, having rotatably mounted at its upper extremity an anti-friction roll 926 resting against the periphery of a cam 928 fast upon a shaft 930 turning in bearings in the frame-section parallel to the shaft 918. The shaft 930 is rotated, through a train of spur-gearing 932, from a shaft 933 driven from the inclined shaft 750 through a universal joint 934. The periphery of the cam 928 has a portion 935 concentric with the axis, which, when the roll 926 is in contact with it, maintains the fingers 904 in their extreme rearward positon in preparation for their feeding movement. A steeply inclined portion 936 beyond this, as the cam rotates, causes the abrupt travel of the levers and fingers along their slots into the chamber 900. Here they dwell for a very brief time, while another concentric portion 937, of smaller diameter than the portion 935, is traveling under the roll; and finally an incline 938 of the cam quickly restores the levers and fingers to their initial postion. The roll 926 is maintained in engagement with the cam 928 by a spring 940 secured at one end to an arm 942 fixed to the shaft 918, and at the other end to a rod 944 supported between the walls of the frame-section. A threaded tension-device 946 allows for a variation in the force with which the roll is held against the cam. In the forward or feeding travel of the fingers, a vertical face 948 of each finger strikes the pile of pads which have accumulated in the chamber 900, the cam in the present instance being so designed with relation to the rate of feed by the mechanism I that five of these will have gathered. When the faces 948 of the fingers act upon the pile of pads, they force them into a chute 950, which is inclined or curved downwardly at the forward extremity and projects outside the frame. At this time, a vertical plunger or ejector 952, operating in the upper end of the chute, is raised to allow the pads to enter. This plunger may consist of a pair of longitudinal bars 954 fixed upon blocks 956, adjustable as to height to alter the time of engagement of the plunger with the pads, by pairs of nuts 958, 958 lying upon opposite sides of the blocks and engaging the threaded ends of vertical rods 960 mounted to move in guides in the frame. Spaced along the bars 954 are vertical plunger-bars 961, which contact with the upper pad in the chute at a number of points transversely of the mechanism, and which have spaces between them for other elements, later to be described, to operate. Pivoted upon a horizontal rod 929 connecting the plunger-rods 960 are connecting rods 962 articulated to levers 963 pivoted upon the frame 902. Mounted to turn upon the levers are rolls 964 entering grooves in cam-disks fast upon the shaft 930. As the disks 965 are rotated by the cam-shaft, a portion 966 of each groove, approaching closely to a diametrical line across the disks, holds the levers 933, and therefore the plunger-bars 961, raised to provide for the entrance of the pile of pads into the chute. Then, when a succeeding portion 967 of each cam-groove affects the levers, this portion being circular and near the periphery of its disk, the levers and plunger-bars are rapidly lowered and held down for a considerable time.

Spaced horizontally below the bottom of the pad-receiving chamber 900, between the fingers 904 and between the plunger-bars 961, are band-applying bars 970 for inserting at suitable intervals, there being three of these devices here shown, bands V of some such material as paper, or some other equivalent binding material, as cords, between series of the pads contained in the chute and predetermined in number. The mechanism as herein designed provides for the application of the bands to the pads between every fiftieth. This, after the series is forced out of the end of the chute 950, enables an attendant to divide each band at a loop formed between successive series and secure the ends about each of these to form a package or bale. Each band-applying bar 970 is mounted to reciprocate in ways 971 located just below the top of the frame-section 902, there being rollers 972, turning upon the opposite sides of each bar, which project into the ways and allow their movement with little resistance. The band V is supplied to each applying bar from a reel 973 mounted to turn upon a standard 974 rising from the top of the frame. A pivoted brake-bar 975, turning upon the top of each standard and resting by gravity against the outer surface of the reel of band-material, prevents it from being drawn off too freely. To avoid slack in the band, it is placed under tension by a roller 976 for each reel

contacting with a loop of the corresponding band and mounted to turn upon a lever 977. A spring 978 maintains the tension, it being adjustable by a threaded device 979 connecting one extremity of the spring with its lever. From the tension device, each band passes back over a guide-roll 980, and then forward about a contact-roll 981 upon the extremity of a bar 970 adjacent to the chute, it at this point entering the chute and extending about one or more of the pad-series therein.

Movement of each band-applying bar in opposite directions is effected by a pair of flexible actuating bands 982, which may be of steel, secured at their opposite extremities at 983 to the under side of the corresponding bar and to the opposite sides of the periphery of a wheel 985 secured upon a shaft 986 journaled near the upper rear portion of the frame-section 902. Adjacent to one of the wheels 985 and turning with it is a similar wheel or drum 987, having flexible bands 988 secured at 989 to the drum and to opposite ends of an elongated head 990 carried upon the top of a lever 991 pivoted at the bottom and rear of the frame. The head 990 includes a rocking-portion 992, to which one of the bands 988 is joined, this being variable as to angle by a pressure-screw 993, so that the tension of the bands may be changed. An anti-friction roll 994, turning upon the lever 991, is drawn by a spring 995, connected to the lever and through a tension-adjusting device 996 with the frame, against the periphery of a cam 997 surrounding the shaft 933. Generally, the operating surface of this cam is circular, but has in it an abrupt depression 998. The cam receives its motion through reducing-gearing, consisting of a pinion 941 secured upon the shaft 933 and meshing with a gear 943 upon an idle shaft 945. Fast upon this last-named shaft is a pinion 947, turning a gear 949 which is attached to the cam 997. Mounted upon the lever 991 with the roll 994 is a second anti-friction roll 951, which may come into contact with the periphery of a cam 953 fixed upon the shaft 933. The cam 953 has a portion 955, concentric with the shaft, and a flattened portion 957, each of these portions occupying about half of the cam-circumference. Entrance of the roll 994 into the cam-depression 998 produces, through the intermediate connecting bands, an abrupt movement of all the bars 970 from their normal positions with their rolls 981 just outside the chute 950 through said chute to introduce the bands V between the adjacent pads. The character of this depression 998 is such that the roll 984 cannot ride out of it; but the cam 953, rotating at a considerably greater speed, brings its concentric surface 955 against the roll 951, raising the roll 994 from the depression at the appropriate time, and then releasing it so that it is under the control of the cam 997. When the period arrives for the roll 994 to again enter the cam-depression, the portion 957 of the cam 953 is opposite the roll 951, so that this action is not interfered with.

A pile of five pads having accumulated in the chamber 900, the fingers 904 are thrust quickly forward against them during an interval produced by the spacing-feeder I. The pads are thus carried into the chute, and the fingers 904 are drawn back, their pivotal mounting upon the carriage enabling them to pass under a pad, which will have entered the chamber while the fingers are in their extreme forward positions. The plunger-bars 961 were, during the delivery of the pile of pads, raised out of their path of movement, but now descend, crowding the pile just delivered and the pads which have preceded it along the chute. This feed into the chute from the chamber, of pads in units of five, continues until a sufficient number has accumulated to make the desired bale, as fifty. Then, the applying bars 970 are thrust across the chute between the pad which is to lie at the top of the bale and that next above it, they passing through the forward wall of a casing surrounding this end of the mechanism by means of openings 959 formed therein. This leaves loops of the bands projecting, which, during the succeeding feed of piles of pads, are drawn into the chute. When the pads emerge from the lower extremity of the chute upon a suitable support, as a table T, the bands at the doubled end of the loop lying along the chute-wall may be severed, leaving ends to secure about each bale.

Operation of the system.

A bale of the fibrous material X is laid upon the belts 104 of the feeder associated with the primary separator B, and advanced thereby until engaged by the teeth upon the upper and lower feeder-belts. By these, it is urged slowly and positively forward, engaged along a considerable portion of its length, against the separating rolls 152, the teeth of which, projecting as they approach the axial line of the bale, tear the fibers from its end, carrying them both upwardly and downwardly into the field of action of the rolls 154, 154, which, by their increased speed of rotation, further shread and separate the material. In a condition of partial reduction, it moves with the feed-belts 202 of the secondary separator C beneath the rear pressure-feet 244, which hold it upon the belts and the table over which they travel to be torn apart by the feet 252. Each of the longitudinal series of pairs of these pressure and shreading feet acts successively, passing the material from one

pair to another, until it emerges from the separator C in a condition of almost a perfect separation between the fibers, but unequally distributed. Here, seized by the fingers 344 of the equalizing feeder D, it is gradually forced between the belts 308, 308 in a substantially homogeneous but not greatly compacted mass, the density of which is controlled by the tension of the spring 356. The material is now in condition favorable for its arrangement in the general form in which it is to be wrapped. For this purpose, it emerges from the belts 308 between the feed-rolls 408, 410 of the filler-assembler E, and is held by them while it is picked apart by the teeth of the wheel 420 and gathered into a mat by the combined action of the blast produced by the wheel and by the pressure of the rolls 434 and 436, this mat approaching the form and density per unit of length which the filler-strip is to possess. Traveling forward from the filler-assembler E to the mechanism F at substantially the maximum rate at which it may be effectively operated on, the initially formed mat is compressed both horizontally and vertically by the belts 526, 526 and the rolls 540 and 542, respectively, so that it issues from this filler-former F with substantially the sectional dimensions of the pad-strip and is delivered on the paper fed over the bed-roll 602. At the next mechanism G, the paper Y is wrapped about the filler-strip and glued at Z both between the adjacent edges of the wrapper and between the wrapper and filler, the pad-strip thus being completed. The knife 742 of the cutter mechanism H, traveling with the pad-strip at the same speed, severs said strip, forming pads P, the length of which is dependent upon the adjustment of the oscillatory path of the knife. The separated pads thereupon enter between the upwardly inclined belt 810 and the rolls 826 and 828 of the feeder I, which accelerate their movement, thus separating each pad from those succeeding it, and throwing it forward, one upon another, into the receiving chamber 900 of the baler J. Upon the accumulation of a predetermined number of the pads in the chamber, five for example, the feeding-fingers 904 operate to eject this pile of pads into the chute 950, down which they are forced with those preceding them by the plunger-bars 961. At suitable intervals, as between every fifty pads, a loop of the securing band V is passed by the applying bars 970, and, upon the exit of the series thus surrounded by the bands from the outlet of the chute upon the table T, the bands are divided at *v* and the ends fastened to one another, as by gluing, completing the formation of a marketable bale or package Q of the pads. From the supplying of the bale of filler-material to the binding of the bands about the bales, the manufacture of the pads and their baling has been performed automatically, the only human intervention necessary being the occasional supply of the materials X, Y, Z and V and the removal of the finished product. By this elimination of the elements of judgment and chance, the quantity and density of the filling material in the pads is maintained uniform, so that they may all present a constant protective effect upon the goods to which they are applied, and yet be produced at a minimum cost.

Former for double-wrapped pad-strip (Figs. 66 to 73, inclusive).

It is sometimes desirable to form a pad *p* with two wrapping strips *y* and *w* enveloping it, instead of one. With the system otherwise similar in arrangement and operation to that already described, there may be placed upon the top of the frame 601 of the pad-strip-former G an upper supply-roll, to provide a strip *w* to furnish an additional wrapper-portion, while the strip *y* is taken, as was the strip Y, from below the frame, though in this case it is of greater width. Rolls 1000 and 1002 are arranged and operate similarly to the rolls 602 and 604, guiding the lower and upper strips. The opposite guide-walls 1004, 1004, below which the strip *y* travels, converge slightly and enter the rear extremity of a forming trough 1006. The walls of this trough at its opposite sides are tranversely curved symmetrically to an egress-throat 1008. Opposite fingers 1010, which may be identical in form and mounted as are the fingers 646, force down the lower strip *y* upon the filler, and plural nozzles 1012 apply glue at *z* along both its over-turned edges. An additional glue-tank for the purpose of supplying the second nozzle is indicated at 1014 in Fig. 37 of the drawings, this being mounted with the companion tank upon the transverse bar 660. The glue is distributed upon the strip *w* by symmetrically disposed spreading-fingers 1016, which continue the pressure of the fingers 1010 upon the pad-strip. As the strip enters the egress-throat 1008, the overturned edges of the strip *y* are pressed down upon the glued area at each side, to be further secured by the pressure of the co-operating rolls at the strip-cutter H. The succeeding steps are as previously described, the resulting pad *p* being illustrated in Figs. 72 and 73 of the drawings.

I claim:

1. A system of making pads from a bale of compacted fibrous material comprising means for feeding the bale and movable separating means acting upon the end of the moving bale in proximity to the plane of the axis of the bale and moving from the

interior outwardly to disintegrate the bale and to prevent the fibres thereof from again matting together.

2. A system of making pads from a bale of compacted fibrous material comprising means for feeding the bale, movable separating means acting upon the end of the moving bale in proximity to the plane of the axis of the bale and moving from the interior outwardly to disintegrate the bale and to prevent the fibres thereof from again matting together and other separating means moving in the same direction positioned to engage the fibres delivered thereby and further to separate and accelerate the movement thereof.

3. A system of making pads from a bale of compacted fibrous material comprising means for feeding the bale, movable separating means acting upon a face of the moving bale from the interior outwardly to disintegrate the bale and to prevent the fibres thereof from again matting together, a conveyer for the fibres delivered by said separating means and relatively reciprocating shredding members acting upon the moving layer of fibres upon said conveyer to disintegrate any matted fibres delivered to said conveyer and further to separate said fibres and continuously to deliver a body of loosely associated fibres.

4. A system of making pads from a bale of compacted fibrous material comprising means for feeding the bale, movable separating means acting upon a face of the moving bale from the interior outwardly to disintegrate the bale and to prevent the fibres thereof from again matting together, a conveyer for the fibres delivered by said separating means, relatively reciprocating shredding members acting upon the moving layer of fibres upon said conveyer to disintegrate any matted fibres delivered to said conveyer and further to separate said fibres and continuously to deliver a body of loosely associated fibres, means for advancing the body of loosely associated fibres and equalizing means acting to compact the fibres into a body of uniform density per unit of length.

5. A system of making pads from a mass of fibrous material comprising means for separating the fibres and producing a continuously advancing body of loosely associated fibres and equalizing means acting intermittently in the direction of movement of the body to gather together and to compact the fibres into a body of uniform density per unit of length.

6. A system of making pads from a mass of fibrous material comprising means for separating the fibres and producing a continuously advancing body of loosely associated fibres, equalizing means acting to compact the fibres into a body of uniform density per unit of length and means acting to separate the fibres of said body of equalized material and to produce a continuous, uniformly matted strip of fibrous material.

7. A system of making pads from a mass of fibrous material comprising means for separating the fibers and producing a continuously advancing body of loosely associated fibres and intermittently operable equalizing means acting to compact the fibres into a body of uniform density per unit of length.

8. A system of making pads from a mass of fibrous material comprising means for separating the fibres and producing a continuously advancing body of loosely associated fibres, reciprocable means acting to advance and compact the fibres into a body of uniform density per unit of length and means for varying the compressive force exerted by said reciprocable means.

9. A system of making pads from a mass of fibrous material comprising means for separating the fibres and producing a continuously advancing body of loosely associated fibres, equalizing means acting in the direction of movement of the body to gather together and to compact the fibres into a strip of uniform density per unit of length and means for advancing and compressing said strip to a predetermined form.

10. A system of making pads from a mass of fibrous material comprising means for separating the fibres and producing a continuously advancing body of loosely associated fibres, intermittently operable equalizing means acting to compact the fibres into a body of uniform density per unit of length, means for advancing and compressing said strip to a predetermined form and means for wrapping said formed strip to produce a continuously moving pad strip.

11. A system of making pads from a mass of fibrous material comprising means for separating the fibres and producing a continuously advancing body of loosely associated fibres, equalizing means acting intermittently in the direction of movement of the body to gather together and to compact the fibres into a body of uniform density per unit of length, means for advancing and compressing said strip to a predetermined form, means for wrapping said formed strip to produce a continuously moving pad strip and means for severing the wrapped strip into pads of predetermined length during the continuously advancing movement thereof.

12. A system of making pads from a mass of fibrous material comprising means for separating the fibres and producing a continuously advancing body of loosely associated fibres, equalizing means acting intermittently in the direction of movement of the body to gather together and to compact the fibres into a body of uniform density per

unit of length, means for advancing and compressing said strip to a predetermined form, means for wrapping said formed strip to produce a continuously moving pad strip, means for severing the wrapped strip into pads of predetermined length during the continuously advancing movement thereof and means for progressively accelerating the movement of the severed strips.

13. A system of making pads from a mass of fibrous material comprising means for separating the fibres and producing a continuously advancing body of loosely associated fibres, equalizing means acting to compact the fibres into a body of uniform density per unit of length, means for advancing and compressing said strip to a predetermined form, means for wrapping said formed strip to produce a continuously moving pad strip, means for severing the wrapped strip into pads of predetermined length during the continuously advancing movement thereof, and means for progressively accelerating the movement of the severed strips including means for printing upon said pads during the accelerating movement thereof.

14. A system of making pads from a mass of fibrous material comprising means for separating the fibres and producing a continuously advancing body of loosely associated fibres, equalizing means acting to compact the fibres into a body of uniform density per unit of length, means for advancing and compressing said strip to a predetermined form, means for wrapping said formed strip to produce a continuously moving pad strip, means for severing the wrapped strip into pads of predetermined length during the continuously advancing movement thereof, means for progressively accelerating the movement of the severed strips, means for receiving the pads delivered by said accelerating means and accumulating them into a pile and means for successively delivering a predetermined number of pads from said piling means.

15. A system of making pads from a mass of fibrous material comprising means for separating the fibres and producing a continuously advancing body of loosely associated fibres, equalizing means acting to compact the fibres into a body of uniform density per unit of length, means for advancing and compressing said strip to a predetermined form, means for wrapping said formed strip to produce a continuously moving pad strip, means for severing the wrapped strip into pads of predetermined length during the continuously advancing movement thereof, means for progressively accelerating the movement of the severed strips, means for receiving the pads delivered by said accelerating means and accumulating them into a pile, means for successively delivering a predetermined number of pads from said piling means, means for receiving the pads thus delivered from said pile and means for applying a binder to a predetermined number of pads in said receiving means to form a package.

16. In combination, means for producing pads, and means for separating said pads into groups and applying retaining devices thereto to divide the respective groups whereby the ends of the retaining devices for each group may be united to assemble the group into a package.

17. In combination, means for producing pads, and means for piling together a predetermined number of the pads and intermittently operable means acting to deliver successively a predetermined number of pads from said piling means.

18. In combination, means for producing pads, and means for successively separating said pads into groups of different size whereby a predetermined number of pads may be automatically counted and assembled in a package.

19. In combination, means for producing pads, means for piling together a predetermined number of the pads, means for gathering the piles into larger groups, and means for separating the groups.

20. In combination, means for producing pads, means for piling together a predetermined number of the pads, means for gathering the piles into larger groups, and means for separating and applying retaining means to the groups.

21. In combination, means for producing pads, means for advancing said pads in spaced relation from the producing means, and means operating in the intervals of advance for separating said pads into groups.

22. In a system for making pads of fibrous material, means for assembling the fibrous material in a strip, means for dividing the strip into pads, and means for packaging said pads.

23. In a system for making pads of fibrous material, means for assembling the fibrous material in a strip, means for dividing the strip into pads, means for separating said pads into groups, and means for applying bands to the groups.

24. In a system for making pads of fibrous material, means for assembling the fibrous material in a strip, means for wrapping the strip, means for cutting the wrapped strip into pads, and means for separating the pads into groups and applying retaining means to said respective groups.

25. In a system for making pads of fibrous material, means for assembling the fibrous material in a strip, means for wrapping the strip, means for cutting the wrapped strip

into pads, and means for separating the pads into groups and inserting retaining bands between the groups.

26. In a system for making pads of compacted fibrous material from a bale thereof, means operating upon the end of the bale outwardly from the central portion of the compacted mass to separate the fibers, and means for assembling the separated fibers into a homogeneous, uniformly compacted body.

27. In a system for making pads of compacted fibrous material from a bale thereof, means operating outwardly upon the end of the bale and in opposite directions from the central portion of the compacted mass to separate the fibers, and means for assembling the separated fibers into a homogeneous, uniformly compacted body.

28. In a system for making pads from compacted fibrous material, rotatable means for pulling apart the compacted mass, reciprocating means for separating the fibers of the pulled-apart portions, and means for assembling the separated fibers into a homogeneous, uniformly compacted body.

29. In a system for making pads from compacted fibrous material, means for pulling apart the compacted mass, relatively reciprocable members for successively advancing and separating the fibers of the pulled-apart portions, and means including a reciprocating member for assembling the separated fibers into a homogeneous, uniformly compacted body.

30. In a system for making pads from fibrous material, reciprocating means for separating the fibers, reciprocating means for equalizing the distribution of the fibres, compacting the same into a body of uniform density, and means for arranging the equalized material in pads.

31. In a system for making pads from fibrous material, reciprocating means for separating the fibres, reciprocating means for compacting and equalizing the distribution of the fibers and advancing the equalized material at a uniform rate, and means for arranging the equalized material in pads.

32. In a system for making pads from fibrous material, means for separating the fibers, means for compacting and equalizing the distribution of the fibers, means for picking apart the equalized material, means for uniformly matting and advancing it, and means for forming the advanced mat.

33. In a system for making pads from fibrous material, means for separating the fibers, means for compacting and equalizing the distribution of the fibers, means for picking apart the equalized material, means for uniformly matting and advancing it at the rate at which it is to be formed, and means for forming the advanced mat.

34. In a system for making pads from fibrous material, means for separating the fibers, means for compacting and equalizing the distribution of the fibers, means for picking apart the equalized material, means for assembling the equalized fibers in a mat, means for forming the mat into a strip, and means for dividing the strip into pads of predetermined lengths.

35. In a system for making pads from compacted fibrous material, means for separating the fibres, means for compacting and equalizing the distribution of the fibres, means for picking apart the equalized material, means for assembling the equalized fibers in a mat, means for forming the mat into a filler-strip, means for wrapping the filler-strip, and means for cutting the wrapped strip into pads of predetermined lengths.

36. In a system for making pads from compacted fibrous material, means for separating the fibers, means for equalizing the distribution of the fibres, means for assembling the equalized fibers in a mat, means for forming the mat into a filler-strip, means for wrapping the filler-strip, means for cutting the wrapped strip into pads, and means for packaging the pads.

37. In a system for making packing pads, fiber-feeding members, members forming a passage into which the fibers are forced by the feeding members, relatively reciprocating retaining and picking members receiving fibers from the passage, and matting members to which the picking members deliver.

38. In a system for making packing pads, spring-tensioned fiber-feeding members, resistance members by which the fibers are temporarily held against the tension of the feeding members, relatively reciprocating retaining and picking members receiving fibers from the resistance members, and matting members to which the picking members deliver.

39. In a system for making packing pads, spring-tensioned fiber-feeding members, means arranged to vary the tension of the members, resistance members by which the fibers are temporarily held against the tension of the feeding members, relatively reciprocating retaining and picking members receiving fibers from the resistance members and matting members to which the picking members deliver.

40. In a system for making packing pads, opposite endless traveling members to which fibrous material is delivered, reciprocating feeding fingers operating between the traveling members acting to condense and equalize the fibrous material, a picker-wheel to which the members and fingers deliver, and rolls co-operating with the picker-wheel to produce a mat of the fibers.

41. In a system for making packing pads, opposite endless traveling members to which fibrous material is delivered, feeding fingers operating between the traveling members, a picker-wheel to which the members and fingers deliver, said picker-wheel being arranged to generate an air-current, and rolls co-operating with the air-current from the picker-wheel to produce a mat of the fibers.

42. In a system for making packing pads, opposite endless traveling members to which fibrous material is delivered, reciprocating feeding fingers operating between the traveling members acting to condense and equalize the fibrous material toothed retaining wheels and a picker-wheel to which the members and fingers deliver, and rolls co-operating with the picker-wheel to produce a mat of the fibers.

43. In a system for making packages of packing pads, an assembler for a strip of fibrous material, a cutter for dividing the strip into pads, and a baler gathering the pads into groups.

44. In a system for making packages of packing pads, an assembler for a strip of fibrous material, a cutter for dividing the strip into pads, a spacing feeder receiving the pads from the cutter, and a baler to which the feeder delivers the pads at intervals.

45. In a system for making packages of packing pads, an assembler for a strip of fibrous material, a wrapper operating upon the strip, a cutter for dividing the wrapped strip into pads, and a baler gathering the pads into groups.

46. In a system for making packages of packing pads, an assembler for a strip of fibrous material, a cutter for dividing the strip into pads, and a baler comprising a pad-pile-feeder and a retainer-applier.

47. In a system for making packages of packing pads, an assembler for a strip of fibrous material, a cutter for dividing the strip into pads, and a baler comprising a pad-pile-feeder, a group-advancer and a retainer-applier.

48. In a system for making packages of packing pads, an assembler for a strip of fibrous material, a cutter for dividing the strip into pads, a feeder, and a baler to which the feeder delivers the pads in a pile.

49. In a system for making packages of packing pads, an assembler for a strip of fibrous material, a cutter for dividing the strip into pads, a feeder arranged to project the pads upwardly, and a baler in which the pads fall in a pile.

50. In a system for making packages of packing pads, an assembler for a strip of fibrous material, a cutter for dividing the strip into pads, a feeder, and a baler to which the feeder delivers the pads in a pile and comprising a pile-feeder and a retainer-applier.

51. In a system for making packing pads, a bale-feeder, a separator for the baled material, a conveyor receiving material from the separator, relatively reciprocating pressure and shredding members acting upon the material during its movement by the conveyor, and an assembler to which the conveyor delivers.

52. In a system for making packing pads, a bale-feeder, a separator for the baled material, a horizontal endless conveyor receiving material from the separator, a vertically reciprocating pressure-member and a horizontally reciprocating shreading member acting upon the material during its movement by the conveyor, and an assembler to which the conveyor delivers.

53. In a system for making packing pads, a bale-feeder, a separator for the baled material, a conveyor receiving material from the separator, a series of co-operating relatively reciprocating pressure and shreading members arranged to act successively upon the material during its movement by the conveyor, and an assembler to which the conveyor delivers.

54. A separator for baled fibrous material comprising bale-holding and feeding means, a pair of companion rotatable drums, radially arranged separating teeth reciprocably mounted in said drums and means acting during the rotation of said drums to project said teeth into engagement with the material of the bale and to withdraw said teeth within the periphery of the drum when they are adjacent to a companion separating drum.

55. A separator for baled fibrous material comprising bale-holding and feeding means, a plurality of successive pairs of closely juxtaposed rotatable drums, radially arranged separating teeth reciprocably mounted in said drums and means acting during the rotation of said drums to project said teeth into engagement with the material and to withdraw said teeth within the periphery of the drum when they are adjacent to a companion separating drum.

56. A separator for baled fibrous material comprising bale-feeding means, a pair of rolls toward which the bale is fed, teeth movable through the peripheries of the rolls, and means for projecting and withdrawing the teeth.

57. A separator for baled fibrous material comprising bale-feeding means, a pair of rolls toward which the bale is fed, teeth movable through the peripheries of the rolls, and means for projecting the teeth while they are toward the bale and withdrawing said teeth as they travel from the bale.

58. A separator for baled fibrous material comprising bale-feeding means, a plurality of pairs of rotatable rolls, one pair acting upon the bale and a succeeding pair acting upon material separated by the preceding pair, and reciprocatory teeth carried by the rolls.

59. A separator for baled fibrous material comprising bale-feeding means, a rotatable roll provided with openings in its periphery, a bar having teeth projecting through the openings, and a cam for reciprocating the bar.

60. A feeder having, an equalizer comprising horizontal and vertical traveling members furnishing a feeding passage, and means arranged to force material into the passage at a more rapid rate than its members travel.

61. A feeder having an equalizer comprising a horizontal and a pair of oppositely disposed vertical endless traveling members furnishing a feeding passage, and means arranged to force material into the passage at a more rapid rate than its members travel and to gather it therein to a predetermined density.

62. A feeder having, in combination, a lower conveyor, separated upper conveyors, and reciprocatory feeding members operating between the upper conveyors into the space between the upper and lower conveyors.

63. A feeder having, in combination, members furnishing a feeding passage, feeding members movable in the passage, and springs arranged to draw the members against the material fed in the direction of its advance.

64. A feeder having, in combination, members furnishing a feeding passage, feeding members movable in the passage, springs arranged to draw the members against the material fed in the direction of its advance, and power-driven means for moving the members in the opposite direction.

65. A feeder having, in combination, a lower conveyor, separated upper conveyors, a reciprocatory frame mounted above the upper conveyors, and feeding fingers pivoted upon the frame and extending between the conveyors.

66. A feeder having, in combination, a lower conveyor, separated upper conveyors, a reciprocatory frame mounted above the upper conveyor, feeding fingers pivoted upon the frame and extending between the conveyors, a lever connected to the frame, a cam acting to move the lever in one direction, and a spring arranged to move the lever in the opposite direction.

67. A feeder having, in combination, a lower conveyor, separated upper conveyors, a reciprocatory frame mounted above the upper conveyors, feeding fingers pivoted upon the frame and extending between the conveyors, a lever connected to the frame, a cam acting to move the lever in a direction opposite to the travel of the adjacent portions of the conveyors, and a spring arranged to move the lever in the opposite direction.

68. A feeder having, in combination, members furnishing a feeding passage, means arranged to force material into the passage to a predetermined density, and yieldable means arranged to vary such density.

69. A feeder having, in combination, members furnishing a feeding passage, feeding members movable in the passage, springs arranged to draw the members against the material fed in the direction of its advance, and means arranged to vary the tension of the springs.

70. An assembler for fibrous material comprising rotatable pneumatic means for matting the material, and means for extending the mat.

71. An assembler for fibrous material comprising feeding means, receiving means, and rotatable means acting mechanically and pneumatically to project the fibers from the feeding means to form a mat upon the receiving means.

72. An assembler for fibrous material comprising feeding means, a pair of rolls, and a blast-device arranged to protect fibers from the feeding means upon the rolls and into the bite thereof whereby said fibers will be uniformly matted.

73. An assembler for fibrous material comprising feeding rolls, a picker-wheel cooperating with the rolls and having blast-producing means, and rotatable rolls to which the picker-wheel delivers.

74. An assembler for fibrous material comprising toothed feeding rolls, a picker-wheel having teeth inter-current with those of the feeding rolls and also having blast-producing means, and rotatable rolls upon which the blast deposits the fibers.

75. In a wrapping mechanism, means for advancing material to be wrapped and wrapping material, means for enveloping the material to be wrapped in the wrapping material, means for applying an adhesive to one of the materials, and distributing means extending into the path of the adhesive and acting to spread a portion of the adhesive over the material to be wrapped.

76. In a wrapping mechanism, means for advancing material to be wrapped and wrapping material, means for enveloping the material to be wrapped in the wrapping material, means for applying an adhesive to the wrapped material, and a spreading finger extending into the path of the adhesive and over the material to be wrapped.

77. In a wrapping mechanism, means for advancing material to be wrapped and wrapping material, means for enveloping the material to be wrapped in the wrapping material, means for applying an adhesive to one of the materials, distributing means extending into the path of the adhesive and acting to spread the adhesive over the other material, and means arranged to permit the extent of engagement of the distributing means with said other material to be adjusted.

Signed at Boston, in the county of Suffolk and State of Massachusetts, this 20 day of December, 1919.

WILLIAM E. ELLIOTT.