No. 810,200. PATENTED JAN. 16, 1906.

E. T. FORRESTER.

RAILWAY TIE.

APPLICATION FILED OCT. 17, 1905.

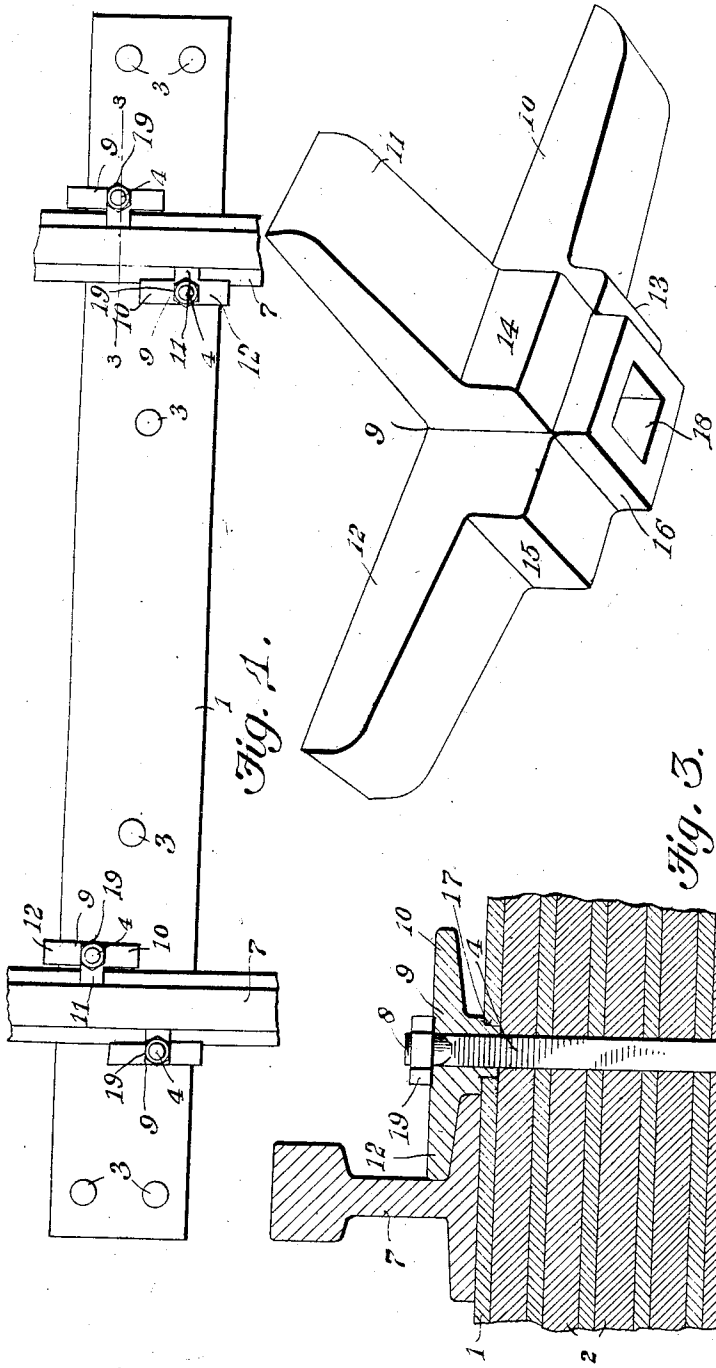

Fig. 1.

Fig. 4.

Fig. 3.

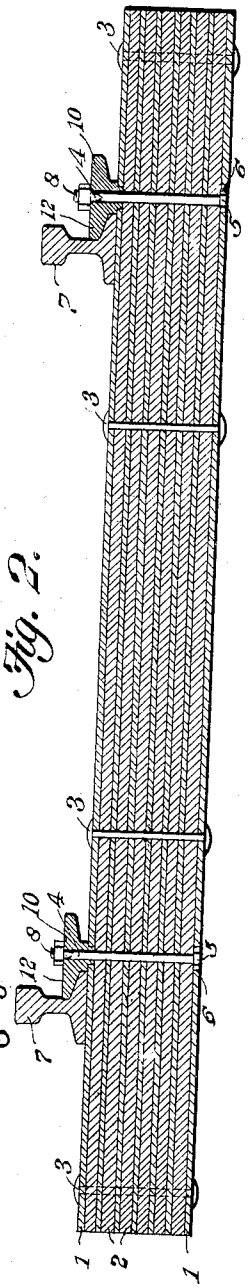

Fig. 2.

Witnesses

E. F. Stewart

H. C. Shepard

Eli T. Forrester

Inventor

by Cushman & Co

Attorneys

UNITED STATES PATENT OFFICE.

ELI T. FORRESTER, OF HOT SPRINGS, SOUTH DAKOTA.

RAILWAY-TIE.

No. 810,200. Specification of Letters Patent. Patented Jan. 16, 1906.

Application filed October 17, 1905. Serial No. 283,163.

To all whom it may concern:

Be it known that I, ELI T. FORRESTER, a citizen of the United States, residing at Hot Springs, in the county of Fall River and State of South Dakota, have invented a new and useful Railway-Tie, of which the following is a specification.

This invention relates to railway-ties, and has for its object to provide an improved composite or built-up tie which has the requisite strength, durability, and elasticity.

It is furthermore designed to equip the tie with improved track-fastening means capable of being conveniently assembled with the rails to secure the same to the tie in a very simple and effective manner.

The present track-fastening means include bolts, and therefore the tie is provided adjacent each end with pairs of openings spaced so as to receive a straight rail between the fastening means, and it is of course apparent that a curved rail would not be properly engaged by the fastening means, wherefore it is another object of the present invention to provide for adjusting the track-fastening means so as to accommodate the same to straight and curved rails.

With these and other objects in view the present invention consists in the combination and arrangement of parts, as will be hereinafter more fully described, shown in the accompanying drawings, and particularly pointed out in the appended claims, it being understood that changes in the form, proportion, size, and minor details may be made within the scope of the claims without departing from the spirit or sacrificing any of the advantages of the invention.

In the accompanying drawings, Figure 1 is a plan view of a tie of the present invention with portions of a pair of rails supported thereon. Fig. 2 is a longitudinal sectional view of Fig. 1. Fig. 3 is an enlarged cross-sectional view on the line 3 3 of Fig. 1. Fig. 4 is an enlarged underneath perspective view of the rail-engaging element of the present track-fastening means.

Like characters of reference designate corresponding parts in each and every figure of the drawings.

The present tie is made up of alternate metallic and fibrous layers 1 and 2, beginning with a metal plate at the bottom and terminating with a metal plate at the top, the several layers being pierced and connected by means of suitable fastenings 3, preferably rivets. The fibrous layers are preferably formed of wood-pulp or paper-pulp. It is proposed to have the wood-pulp or paper-pulp layer treated with some preserving material and to have the metal plates galvanized or otherwise treated so as to withstand the effects of the weather, and thereby prolong the life of the tie. The wood pulp or paper-pulp layers are intended to give elasticity and comparative lightness, while the metal plates give the tie the desired strength and rigidity and also serve through their hardness to prevent the fastenings 3 from working sidewise and becoming loosened in the tie.

The track-fastening means includes bolts 4 in lieu of spikes, the tie being provided adjacent each end with a pair of spaced diagonally-alined openings for the reception of the bolts. As best shown in Fig. 3 of the drawings, it will be seen that the head 5 of the bolt is at the under side of the tie and is let into a seat or recess 6, formed in the bottom metallic plate 1, so as to prevent rotation of the bolt. By preference the head of the bolt is let in flush with the bottom of the tie and the shank of the bolt is non-circular, so as to fit snugly the non-circular opening in the tie, and thus prevent rotation of the bolt. The bolt rises above the top of the tie and also above the top of the base-flange of the adjacent rail 7, and the upper extremity only of the bolt is made cylindrical and threaded, as at 8. Between the threaded upper extremity of the bolt and the top of the tie there is a rail-engaging element 9, which has a substantially rectangular body from whose upright faces extend wings 10, 11, and 12, which are reduced upon their under sides to form the respective shoulders 13, 14, and 15, which increase regularly in length in the order enumerated. The bottom of the body is provided with a non-circular boss 16 to fit within a corresponding non-circular seat or recess 17 in the top of the tie, and the entire body is centrally pierced by a non-circular opening 18 to receive the non-circular projecting upper portion of the bolt. A suitable nut 19 is fitted to the upper threaded extremity of the bolt, so as to hold the element 9 in place.

In practice, the bolts being in place and the rail placed upon the tie between the bolts, a rail-engaging element is fitted to the upper end of each bolt, so as to receive the boss 16

within the seat 17 with one of the wings overlapping the flange of the rail and one of the shoulders 13, 14, and 15 engaging the adjacent edge of the flange, and then the nut 19 is fitted in place and screwed down tightly against the element 9. Where the rail is straight the intermediate shoulder 14 and the intermediate wing 11 are engaged with the flange of the rail; but when the rail is curved one or the other of the shoulders 13 and 15 is engaged with the flange of the rail according as the latter is nearer or farther away from the bolt.

A very important feature of the invention resides in the fact that the bolt extends entirely through the tie, and therefore braces the rail against lateral strains in a more effective manner than with ordinary spikes, which are driven only a few inches into the top of the tie. Moreover, the tie is not injured by repeated removals and applications of the rail-engaging elements, and whatever wear there may be comes between the nuts and the rail-engaging elements, which elements can be replaced with considerably less expense than is required for the replacing of a tie.

Having thus described the invention, what is claimed is—

1. A railway-tie made up of a series of alternating metallic and fibrous layers with metal layers at the top and bottom of the tie, and binding elements piercing the layers of the tie.

2. A railway-tie made up of a series of alternating metallic and fibrous layers with metal layers at the top and bottom of the tie, binding elements piercing the tie, each end portion of the tie being provided with a pair of spaced vertical openings, and track-fastening elements for said openings and provided with non-circular heads fitted in similarly-shaped seats in the bottom metallic layer of the tie.

3. A railway-tie pierced by a vertical opening, a bolt extending through the opening with its head at the under side of the tie, and a flanged rail-engaging element fitted to the upper end of the bolt to overlap the base of the rail and provided with a hub portion entering the opening in the tie.

4. A railway-tie pierced by a vertical opening having enlarged non-circular top and bottom portions constituting seats, a bolt extending through the opening with its head snugly fitted in the lower seat, and a flanged rail-engaging element fitted to the top of the bolt with its flange adapted to overhang and engage the base of the rail and provided with a hub portion entering the seat at the top of the opening in the tie.

5. A railway-tie made up of a series of alternating metallic and fibrous layers with metallic layers at the top and bottom of the tie, said tie being pierced by a vertical opening which is enlarged in the top metallic layer and also enlarged in the bottom metallic layer, a bolt passing through the opening with its head seated in the lower enlargement of the opening, and a flanged rail-engaging element fitted to the upper end of the bolt with its flange adapted to overhang and engage the base of the rail and provided with a hub portion entering the enlarged upper end of the opening in the tie.

6. A track-fastener comprising a bolt which is non-circular adjacent its threaded terminal, a rail-engaging element having a non-circular opening receiving the non-circular portion of the bolt, said element being provided with a series of substantially radial rail-engaging flanges which are successively provided upon their under faces with rail-engaging shoulders located at progressively-increasing distances from the bolt-opening, and a nut to hold the rail-engaging element upon the bolt.

7. The combination with a railway-tie having a bolt-opening therein which is enlarged at its upper end to form a non-circular seat, of a bolt extending through the opening and rising above the tie, a rail-engaging element fitted upon the bolt and having its lower side provided with a non-circular boss fitting the non-circular seat of the tie, said rail-engaging element having a series of substantially radial rail-engaging flanges which are successively provided upon their under sides with rail-engaging shoulders located at progressively-increasing distances from the bolt-opening, and means to hold the rail-engaging element upon the bolt.

8. As a new article of manufacture, a track-fastening element comprising a body pierced by a bolt-opening, the bottom of the body having a non-circular boss concentric with the bolt-opening, a concentric series of substantially radial rail-engaging flanges, and shoulders upon the under sides of the flanges and located at progressively-increasing distances from the bolt-opening.

In testimony that I claim the foregoing as my own I have hereto affixed my signature in the presence of two witnesses.

ELI T. FORRESTER.

Witnesses:

EDWIN VAN CISE,

PATTIE DENNE.