Feb. 14, 1939. L. J. ANDERSON 2,147,137

ELECTROACOUSTICAL APPARATUS

Filed May 13, 1936 2 Sheets-Sheet 1

FIG. 1.

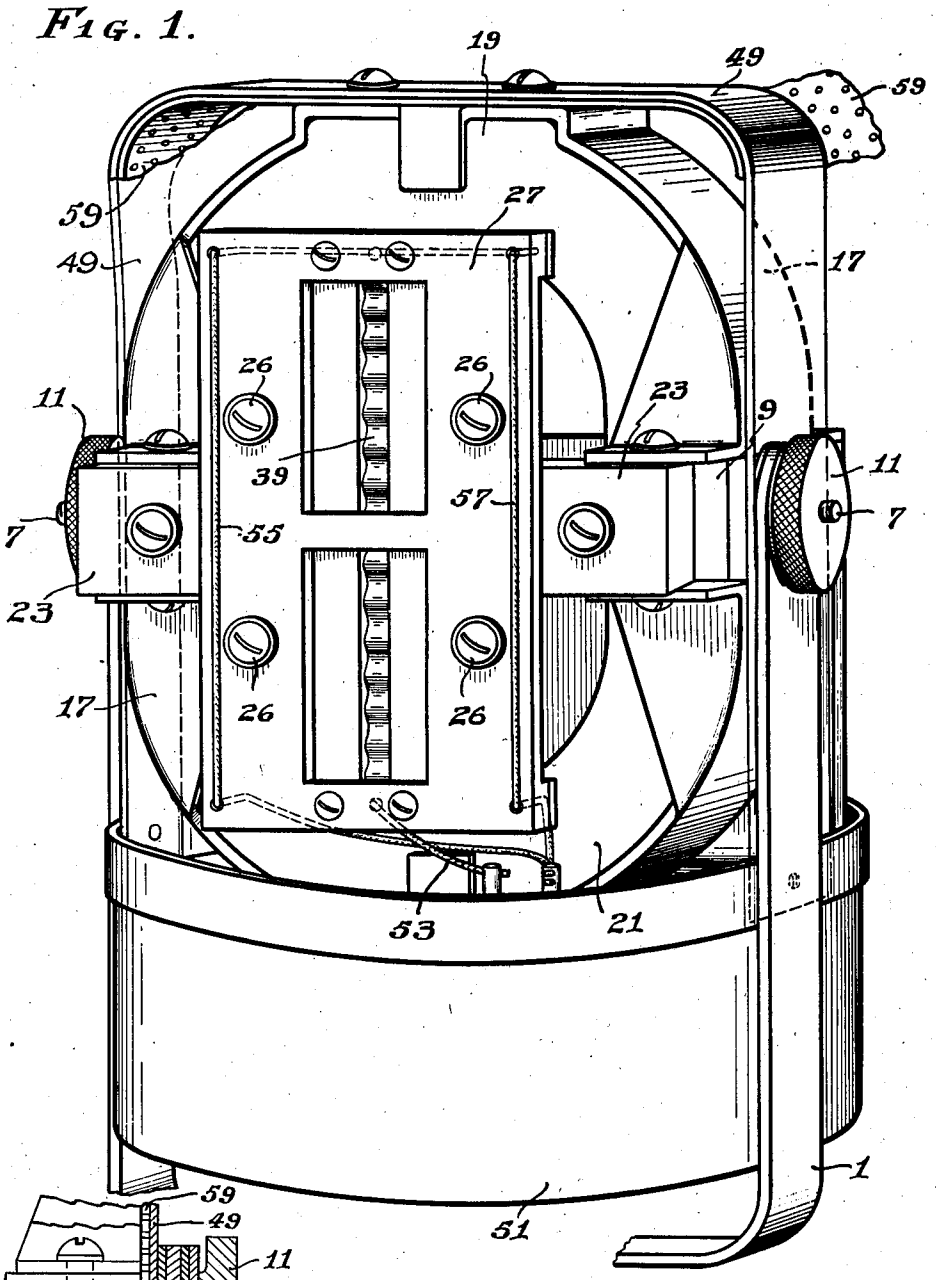

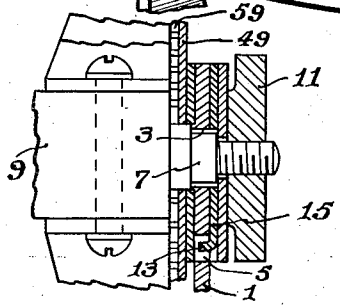

FIG. 6.

INVENTOR
LESLIE J. ANDERSON
BY
ATTORNEY

Feb. 14, 1939. L. J. ANDERSON 2,147,137

ELECTROACOUSTICAL APPARATUS

Filed May 13, 1936 2 Sheets-Sheet 2

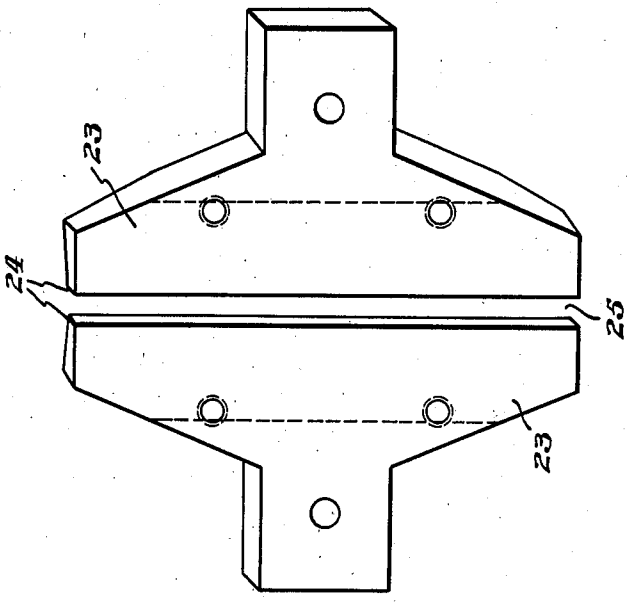

Fig. 4

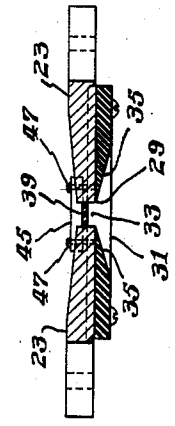

Fig. 5.

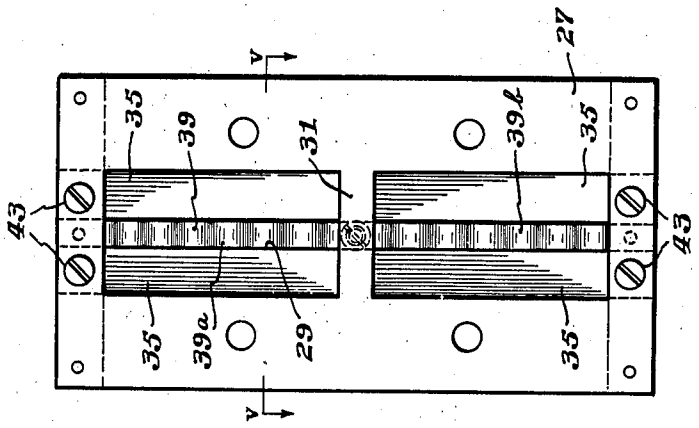

Fig. 3

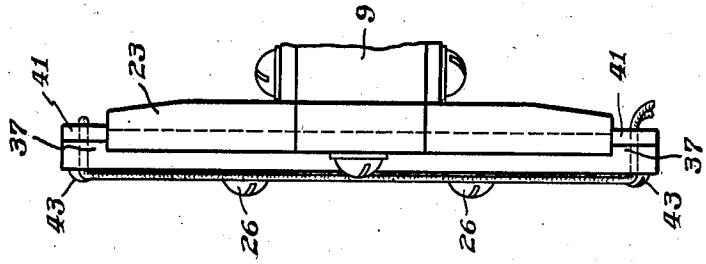

Fig. 2

INVENTOR
LESLIE J. ANDERSON
BY
ATTORNEY

Patented Feb. 14, 1939 2,147,137

UNITED STATES PATENT OFFICE

2,147,137

ELECTROACOUSTICAL APPARATUS

Leslie J. Anderson, Westmont, N. J., assignor to Radio Corporation of America, a corporation of Delaware

Application May 13, 1936, Serial No. 79,454

15 Claims. (Cl. 179—138)

This invention relates to electro-acoustical apparatus, and more particularly to a microphone of the velocity type.

In such a microphone, a conductor of small mass, such as a conductive ribbon, for example, is disposed in a strong magnetic field to be actuated by sound wave pressure whereby an electromotive force is set up therein which may be conveyed to suitable amplifying apparatus. Structures of this type heretofore employed have been formed with relatively wide ribbons, necessitating wide air gaps and large magnets in order to provide desired sensitivity. I have found, however, that it is not necessary to have large, heavy, bulky microphones to obtain the required sensitivity, and the primary object of my present invention is to provide an improved microphone of the type set forth which is compact in construction.

Another object of my invention is to provide an improved microphone of the type aforesaid which is highly sensitive despite its compactness.

Still another object of my invention is to provide an improved microphone of the type set forth wherein the conductive ribbon is so mounted that it may be readily removed without disturbing the magnetic circuit.

A further object of my invention is to provide an improved microphone as aforesaid in which the conductive ribbon may be easily replaced by another when necessary.

Still a further object of my invention is to provide an improved microphone of the type set forth which will have good directional characteristics.

It is also an object of my invention to provide an improved microphone as aforesaid which is simple in construction, which may be assembled with great facility and therefore lends itself well to the requirements of economical commercial manufacture, and which is highly efficient in use.

In accordance with my present invention, I reduce the width of the air gap considerably and use a narrower, although longer, conductive ribbon than is conventionally used. Reducing the width of the air gap permits reduction of the size of the magnetic structure mainly for two reasons. In the first place, with a smaller air gap, the leakage flux is considerably less, and therefore the required cross section of the magnet steel is reduced; and in the second place, a shorter air gap requires a correspondingly smaller amount of magneto-motive force for the same flux density. Since the magneto-motive force is a function of the length of the magnet (increasing with increasing length of magnet), it is obvious that a shorter magnet will suffice for a smaller air gap. The net result is that there is a considerable reduction in the volume of magnetic material required.

As stated above, the conductive ribbon is made longer than the conventional ribbon in order to obtain an equivalent output from my improved microphone. The ribbon is preferably mounted on a non-conductive frame secured to the pole pieces and, in order to avoid any flimsiness of the relatively long, thin ribbon, I support the ribbon at substantially its center on the frame as well as at its ends and thereby provide two ribbon sections. Since the two ribbon sections are in series, their voltages add and the resultant voltage is that of a single ribbon having their combined length. The magnets are placed one above and one below the center line of the ribbon assembly and in back of it in a manner to provide best directional characteristics, the ribbon and its frame being easily removable from the pole pieces without disturbing the magnetic circuit when it is found necessary to replace the ribbon.

The novel features that I consider characteristic of my invention are set forth with particularity in the appended claims. The invention itself, however, both as to its organization and method of operation, together with additional objects and advantages thereof, will best be understood from the following description of a specific embodiment thereof when taken in connection with the accompanying drawings in which:

Figure 1 is a perspective view, on an enlarged scale for the sake of clearness, of a microphone assembly in accordance with my present invention,

Figure 2 is a side elevation of the conductive ribbon supporting frame showing the relation of the pole pieces thereto,

Figure 3 is a front elevation of the conductive ribbon supporting frame with the ribbon mounted thereon,

Figure 4 is a perspective view of the pole pieces showing them approximately in their relation when assembled,

Figure 5 is a sectional view taken on the line V—V of Figure 3, and

Figure 6 is a detail view showing the manner in which the microphone assembly is swivelly mounted on the mounting yoke.

Referring more specifically to the drawings, wherein similar reference characters designate corresponding parts throughout, there is shown a mounting yoke 1 each arm of which is provided with a pair of apertures 3 and 5 at its upper end

(Fig. 6). The apertures 3 swivelly receive the reduced shanks 7 of a pair of horizontally aligned supporting blocks 9 of magnetic material, such as soft iron, the outer ends of the blocks 9 being threaded to receive the knurled thumb nuts 11 for locking the blocks 9 in desired position of adjustment, while the apertures 5 receive the offset lug 13 of a holding washer 15 for holding the microphone assembly against easy removal from the yoke 1.

Mounted on the blocks 9 and clamped thereto by a pair of clamping frames 17 are two horseshoe magnets 19 and 21 each of which has a pole resting against each of the blocks 9. The magnets 19 and 21 are disposed in a common plane and in opposed physical relation, that is, the magnet 19 rests on top of the blocks 9 and the magnet 21 rests against the bottom thereof, so that their respective north and south poles face each other. The blocks 9 extend laterally forward of the magnets 19 and 21, and to each end of the lateral extensions thereof, there is secured a pole piece 23 the adjacent edges 24 of which are slightly spaced from each other (approximately $\frac{3}{32}$'') to provide an air gap 25 therebetween, as clearly shown in Fig. 4. Thus, the pole pieces 23 are aligned in a common plane spaced from and parallel to that of the magnets 19 and 21. It will be seen from the foregoing description that the magnets 19 and 21, the magnetic supporting members 9 and the magnetic pole pieces 23 form a magnetic path for the flux provided by the magnets. Preferably, the pole pieces 23 are reduced in thickness at their adjacent edges 24 so as to increase the flux density in the air gap.

Fixed to the pole pieces 23, as by screws 26, is a frame 27 of non-conductive material, the frame being provided with a longitudinally extending slot 29 bridged centrally by a bridge piece 31 which extends through the slot 29 to provide a lug 33 (Fig. 5). The slot 29 is of substantially the same width as and is aligned with the air gap 25, and the frame 27 is beveled off at 35 as it approaches the slot 29. The frame 27 is also formed with a pair of flanges 37 along its upper and lower edges between which the pole pieces 23 fit, as clearly shown in Fig. 2. The flanges 37 have a thickness substantially equal to the thickness of the lug 33, and a conductive element 39, such as a thin, preferably slightly crimped, ribbon of aluminum foil is secured at both its ends to the flanges 37 by means of conductive strips 41 and the screws 43, and at its center to the lug 33 by means of a strip 45 and the screws 47. The ribbon 39, which lies in the air gap 25, extends the full length of the frame 27 and occupies therewith a plane substantially parallel to the magnets 19, the latter of which are so disposed that they are arranged symmetrically with respect to the center of the ribbon 39 or the bridge piece 31, one above it and the other below it. It will also be noted that the length of the frame 27 and the ribbon 39 is of the same order of magnitude as the overall length between the bases of the magnets, being only slightly less than the overall length between the bases of the magnets 19.

The ribbon or conductive element 39, being long and thin, is ordinarily somewhat flimsy. It is for this reason that it is clamped at its center to the lug 33. This forms two serially connected ribbon sections 39a and 39b each of which is quite firm. Since the two ribbon sections are series connected, their voltages add, so that the net voltage is the same as that obtainable from a single ribbon of full length. The space between the frame 27 and the magnets 19 is such that a microphone constructed as herein described will have very good directional characteristics.

Secured to the upper clamping frame 17 is a bracket 49 which is apertured to receive the shanks 7 of the blocks 9 and which supports a casing member 51 in which a suitable transformer (not shown) is housed for stepping up the voltage from the conductive ribbon 39. One end of the ribbon 39 may be connected to one end of the primary coil of the transformer by a lead 53, and the other end thereof is preferably connected to the other end of the primary coil by a pair of oppositely extending leads 53 and 55 threaded through apertures in the frame 27, as clearly shown in Fig. 1. This affords a pair of opposed loops formed, in one case, by the ribbon 39, the lead 55, the primary coil of the transformer, and the lead 53, and in the other case by the ribbon 39, the lead 57, the transformer primary, and the lead 53. These loops eliminate distortion due to energy picked up inductively by the microphone since the two loops balance each other out. The usual screened casing 59 and wind screen (not shown) may be placed about the structure herein described to protect the parts from injury.

From the foregoing description, it will be apparent that I have provided a novel microphone that is not only compact in construction, but is capable of giving excellent performance. The simplicity of the construction enables easy assembly of the entire structure. Also, since the frame 27 and the ribbon 29 are assembled as a unit and are secured, as a unit, to the pole pieces 23, they can be removed physically as a unit from the pole pieces for any correction or adjustment that may be necessary without disturbing the magnetic circuit at all. This further adds to the advantages of my improved microphone from a commercial standpoint.

Although I have shown and described but a single embodiment of my invention, I am fully aware that many modifications thereof are possible. For example, in place of the horse-shoe magnets shown, a single bar magnet may be placed between the blocks 9. If more than one bar magnet is used, the blocks may be formed in the shape of a T placed on its side with the legs of the T's constituting the lateral extensions, and the cross pieces thereof having one magnet at each end. Other modifications will, no doubt, readily suggest themselves to those skilled in the art. I desire, therefore, that my invention shall not be limited except insofar as is made necessary by the prior art and by the spirit of the appended claims.

I claim as my invention:

1. In sound translating apparatus, a magnet support of magnetic material, a magnet mounted thereon, said support extending laterally to one side of said magnet and a pole piece mounted on the end of the lateral extension of said support.

2. In sound translating apparatus, a pair of spaced supporting members of magnetic material, a magnet mounted thereon with a pole thereof on each of said members, said members extending laterally to one side of said magnet, and a pole piece mounted on the end of the lateral extension of each of said members, said magnet supporting members and pole pieces combining to form a magnetic path.

3. In sound translating apparatus, a pair of spaced supporting members of magnetic material,

a magnet mounted thereon with a pole thereof on each of said members, said members extending laterally to one side of said magnet, a pole piece mounted on the lateral extension of each of said members and combining with said members and said magnet to form a magnetic path, said pole pieces being slightly spaced from each other to provide an air gap, a frame of non-conductive material mounted on said pole pieces, and a conductive element carried by said frame and so arranged thereon as to lie in said air gap.

4. The invention set forth in claim 3 characterized in that said conductive element is secured to said frame at both of its ends and at a point intermediate its ends.

5. The invention set forth in claim 3 characterized in that said conductive element comprises a ribbon lying substantially in a plane parallel to said magnet.

6. The invention set forth in claim 3 characterized in that said conductive element comprises a ribbon lying substantially in a plane parallel to said magnet, and characterized further in that said ribbon is secured to said frame at both its ends and at a point intermediate its ends.

7. The invention set forth in claim 3 characterized in that said conductive element comprises a ribbon lying substantially in a plane parallel to said magnet, and characterized further in that said ribon is secured to said frame at both its ends and at a point substantially midway between its ends.

8. In sound translating apparatus, a pair of spaced supporting members of magnetic material, upper and lower magnets mounted thereon with a pole of each of said magnets on each of said members, said members extending laterally to one side of said magnets, a pole piece mounted on the lateral extension of each of said members and combining with said supporting members and said magnets to form a magnetic path, said pole pieces being slightly spaced from each other to provide an air gap therebetween, a frame of non-conductive material mounted on said pole pieces, and a conductive element carried by said frame and so arranged thereon as to lie in said air gap.

9. The invention set forth in claim 8 characterized in that said magnets are disposed symmetrically with respect to the center of said conductive element.

10. The invention set forth in claim 8 characterized in that said magnets are aligned with each other in a common plane, and characterized further in that said conductive ribbon is disposed in a plane parallel to said magnets.

11. The invention set forth in claim 8 characterized in that said magnets are aligned with each other in a common plane, and characterized further by the addition of means for securing said magnets to said supporting members in aligned relation.

12. The invention set forth in claim 8 characterized in that said supporting members comprise a pair of horizontally disposed blocks, characterized further in that said magnets are of the horse-shoe type with one of said magnets mounted on top of said blocks and the other on the bottom of said blocks, and characterized still further by the addition of means for securing said magnets to said blocks.

13. The invention set forth in claim 8 characterized in that said supporting members comprise a pair of horizontally disposed blocks, characterized further in that said magnets are of the horse-shoe type with one of said magnets mounted on top of said blocks and the other on the bottom of said blocks and with the poles of the respective magnets facing each other, and characterized still further in that said frame and said conductive element are on a plane parallel to said magnets, said frame and conductive element having a length of the same order of magnitude as the overall length between the bases of said magnets.

14. In combination a yoke, a pair of supporting blocks of magnetic material swivelly mounted on said yoke one on each arm of the yoke, a pair of horse-shoe magnets mounted on said blocks in a common plane, a pole of each of said magnets resting against each of said blocks, one of said magnets being mounted on top of said blocks and the other on the bottom thereof in physically opposed relation, said blocks extending laterally from said magnets, a pole piece on the lateral extension of each of said blocks and combining with said blocks and said magnets to form a magnetic path, said pole pieces lying in a common plane spaced from said magnets and having their adjacent edges slightly spaced from each other to provide an air gap therebetween, a frame of non-conductive material mounted on said pole pieces, a conductive ribbon movably carried by said frame and so arranged thereon as to lie in said air gap for slight movement therein, a bracket member associated with said yoke, a casing carried by said bracket member, a transformer house in said casing, and leads connecting each end of said ribbon with the primary coil of said transformer.

15. In a microphone, the combination of a frame member, and a thin, relatively long, narrow conductive ribbon carried thereby, said ribbon being secured to said frame member at both its ends and at a point intermediate its ends whereby to provide a pair of serially connected ribbon sections.

LESLIE J. ANDERSON.