Dec. 13, 1932. F. J. BRIDGEMAN 1,890,669

GUN

Filed May 6, 1932 2 Sheets-Sheet 1

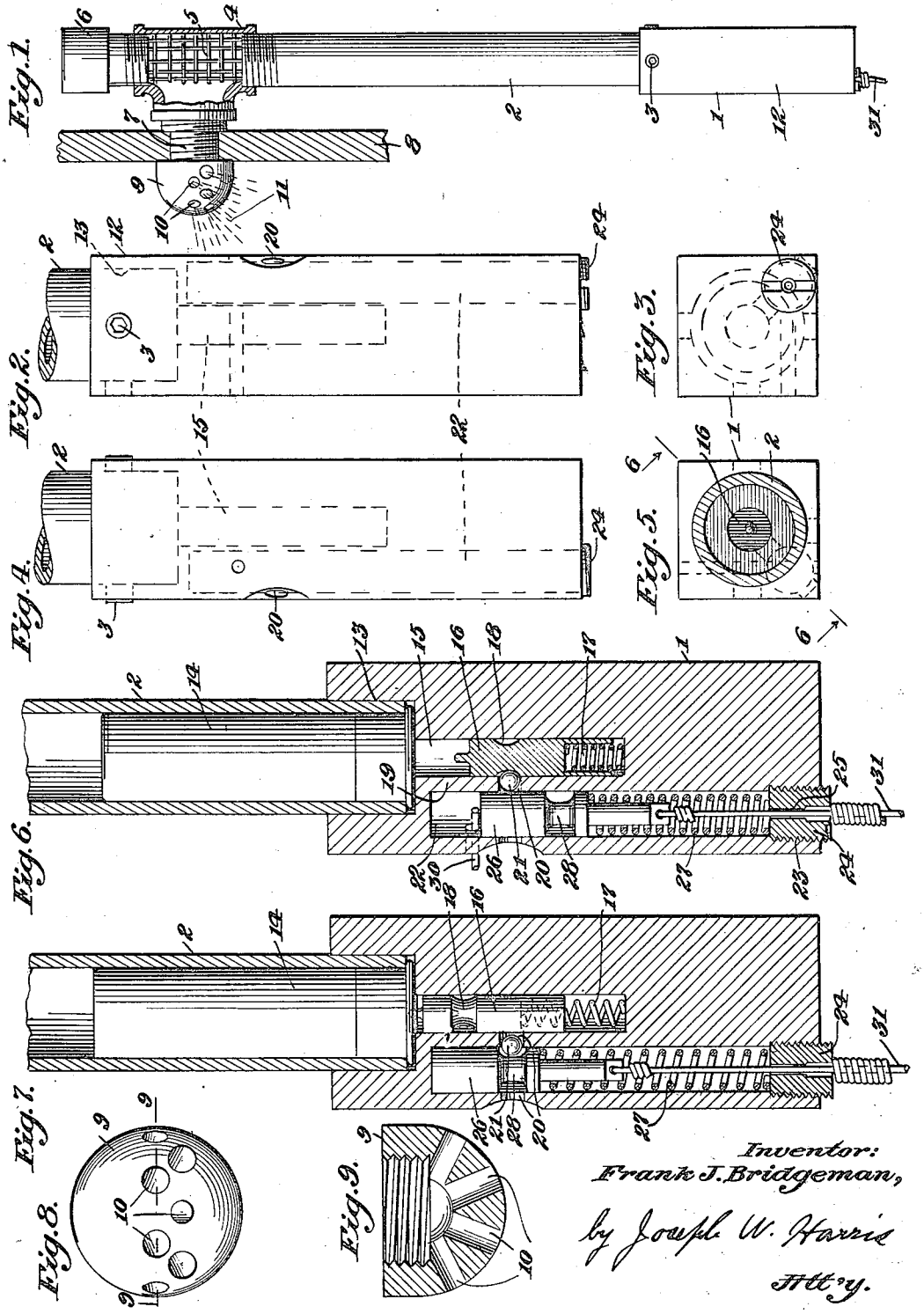


Inventor:
Frank J. Bridgeman,
by Joseph W. Harris
Atty.

Dec. 13, 1932. F. J. BRIDGEMAN 1,890,669

GUN

Filed May 6, 1932 2 Sheets-Sheet 2

Fig. 11.

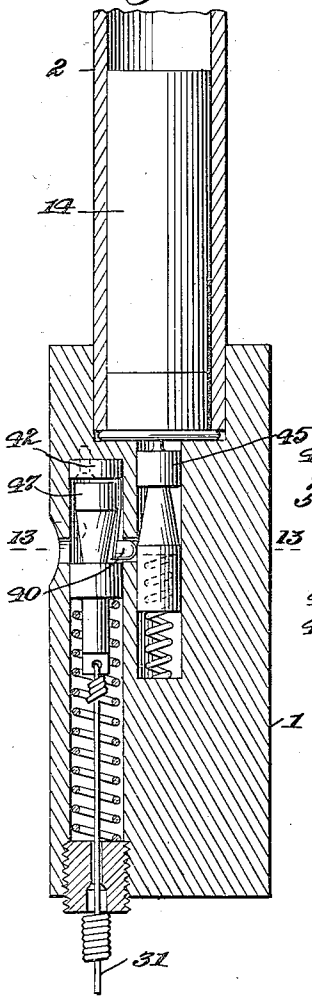


Fig. 10.

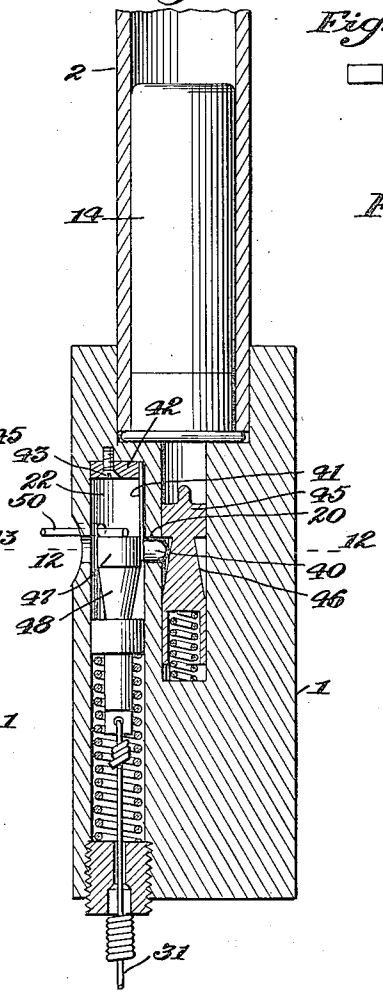


Fig. 14. Fig. 15.

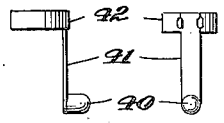


Fig. 16.

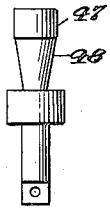


Fig. 18.

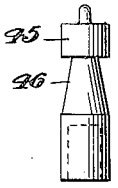


Fig. 13.

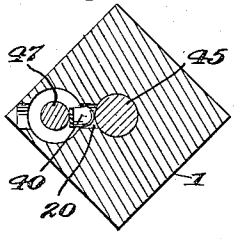


Fig. 12.

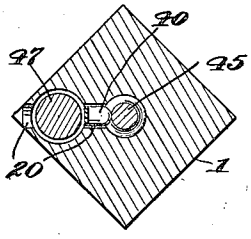


Inventor:
Frank J. Bridgeman,
by Joseph W. Harris
Atty.

Patented Dec. 13, 1932 1,890,669

# UNITED STATES PATENT OFFICE

FRANK J. BRIDGEMAN, OF CLEVELAND, OHIO, ASSIGNOR TO THE LAKE ERIE CHEMICAL COMPANY, OF CLEVELAND, OHIO, A CORPORATION OF OHIO

## GUN

Application filed May 6, 1932. Serial No. 609,737.

This invention relates to disabling gas guns, of the type which discharge irritating and disabling gases, for example, of the "tear gas" type, especially adapted for use with a mechanical firing system.

An object of the invention is to provide a gun which will be positive in action and deliver a rapid and violent blow by the firing pin against the primer of a cartridge.

A further object is to provide a gun of the above type which contains a release mechanism, the release being actuated by the release of a spring controlled trigger, the trigger upon its release setting free a spring actuated firing pin.

A further object is to provide a spring actuated gas gun containing a spring actuated trigger, the trigger being released by the release of a tension wire, the trigger then setting free a spring controlled firing pin, the latter delivering a sudden and powerful blow against a chemical gas charge containing cartridge.

Other objects of the invention will be apparent to those skilled in the art upon reading the specification.

In the accompanying drawings,

Fig. 1 is a view partly in plan and partly in section of an installation of a gun, with an outlet from the barrel extending through a partition and with a nozzle on the other side of the partition, and showing blasts of gas issuing from the nozzle;

Figs. 2 and 4 are views of adjacent sides of the gun body showing the gun barrel broken.

Fig. 3 is a bottom plan view of Fig. 2;

Fig. 5 is a top plan view of Fig. 4, also showing the tip of the firing pin;

Fig. 6 is a longitudinal view partly in elevation and partly in section on the line 6—6 of Fig. 5, showing the gun in the "set" position, with the trigger temporarily held down by a suitable pin, and showing a cartridge in a broken gun barrel;

Fig. 7 is a view similar to Fig. 6, showing the gun in the discharged position with the trigger released and the firing pin against the cartridge;

Fig. 8 is a view in elevation of one type of nozzle shown in Fig. 1;

Fig. 9 is a sectional view of the nozzle on the line 9—9 of Fig. 8;

Fig. 10 is a view partly in plan and partly in section of a modified type of gas gun in the "set" position, with the trigger temporarily held down by a suitable pin, and also showing a cartridge and a section of a gun barrel;

Fig. 11 resembles Fig. 10 showing the gun in the discharged position with the trigger released and the firing pin against the cartridge;

Fig. 12 is a transverse sectional view on the line 12—12 of Fig. 10;

Fig. 13 is a transverse sectional view on the line 13—13 of Fig. 11;

Figs. 14 and 15 are side and front views respectively of a detachable movable element in Figs. 10 and 11;

Fig. 16 is a view in elevation of a trigger of the type illustrated in Figs. 10 and 11; and

Fig. 17 is a view in elevation of a firing pin of the type illustrated in Figs. 10 and 11.

In Fig. 1, the gun is suitably detachably connected to a barrel 2 for example by screws 3, the upper end of the barrel is connected to a suitable fitting 4, shown as a broken pipe coupling which contains a suitable screen 5 to retain fragments of wadding, etc., generally used in the manufacture of cartridges. The top of the pipe coupling 4 may be suitably closed for example by a nipple and cap 6, or by any other means. The discharge side of the pipe coupling 4 is provided with a duct, for example a nipple 7, which may pass through a partition 8 of a building or room, and to the outer end of the nipple 7 is secured a suitable nozzle 9, or other distributing device, provided with discharge ports or openings 10 to discharge the gas 11 into the area to be gassed.

The gun 1 may consist of a metal block 12 provided with an opening 13, Figs. 2 and 6, into which is detachably secured the barrel 2 by the screws 3; within the end of the barrel 2 is placed the cartridge 14, Figs. 6 and 7. Below the cartridge in the gun is a chamber

15, Fig. 6 within which is a firing pin 16 actuated by the spring 17, the firing pin 16 is provided with a groove 18 having an inclined wall, and in the adjacent partition wall 19 is a hole 20 in which is placed the movable element shown as a ball 21, which latter engages the firing pin by the groove 18, the hole 20, being drilled from the edge. Extending from the bottom end of the gun 1 is a long chamber 22, with a threaded end 23, in which latter is placed the plug 24 provided with the hole 25. In the chamber 22 is inserted the trigger plunger 26 actuated by the spring 27, the trigger being provided with a groove 28. In Fig. 6, the trigger 26 is shown as connected to the tension wire 31, which latter passes through the hole 25, the tension wire being connected to a suitable control not shown which is a part of a mechanical discharge system; a pin 30 being used to temporarily hold the trigger until the installation is completed.

To "set" the gun, the barrel 2 is removed, the firing pin 16 pushed down, and the trigger 26 pulled back until its upper surface is below the hole 20, and the ball 21 inserted into the hole 20 until it engages the groove 18 of the depressed firing pin; the trigger is then released sufficiently for it to rest against the temporary pin 30 in the position shown in Fig. 6. The barrel 2 and the cartridge 14 are now attached, the pin 30 removed, and the gun is ready for firing. In the position shown in Fig. 6, the ball 21 rests against the straight portion of the wall of the trigger 26 and in the groove 18 of the firing pin, thereby securely locking the firing pin. The tension wire 31 leads to a control connected in a mechanical firing system not shown, and when the wire 31 is released, the spring 27 forces the trigger 26 to the position shown in Fig. 7, the inclined surface of the groove 18 in the firing pin forcing the ball 21 into the groove 28, releasing the firing pin which latter then violently strikes the cartridge 14, and fires the same. The discharge of gas, and wadding, etc., from the cartridge, passes through the barrel 2 into the coupling 4, the wadding, etc., being caught and held by the screen 5 while the disabling and irritating gas passes through the nozzle 9, and out of the discharge ports 10, as blasts 11, Fig. 1.

Figs. 10 and 11 are modifications of a gas gun resembling in general the gun illustrated in Figs. 6 and 7 respectively. In Figs. 10 and 11 the movable element 40 is attached by a light spring 41 to the plug 42, Figs. 14 and 15, the plug being detachably secured in the chamber 22 by the screw 43, Fig. 10. The movable element 40 shown as a plug fits loosely in the hole 20. The firing pin 45 is provided with a recess having an inclined surface 46, and the trigger 47 with the recess having an inclined surface 48; the two inclined surfaces extending in opposite directions. To set the guns illustrated in this modification, the gun barrel and cartridge are removed, the firing pin 45 pressed down while the trigger 47 is at the top of the trigger chamber, Fig. 11. The plug 40 will spring into the recess of the firing pin against the inclined surface 46, Fig. 10. The trigger 47 is then retracted until its plane surface is opposite to the plug 40 and holds the latter against the firing pin as shown in Fig. 10, and is temporarily held by the pin 50 until the tension wire is attached to a control, the pin 50 is then removed and the gun is ready for firing.

I claim:—

1. A gas gun comprising a firing pin, a retractable release trigger, two parallel chambers, said pin in a first chamber, and said trigger in a second chamber, means cooperating with said trigger to engage and hold said firing pin in the "set" position when said trigger is retracted, said means adapted to be disengaged and cause the discharge of said pin when said trigger is released.

2. A gas gun comprising a spring actuated firing pin, and two additional movable elements, two parallel chambers, said pin in a first chamber, and one of said movable elements in a second chamber, said two additional movable elements adapted to cooperate and engage and hold said firing pin in the "set" position, the release of a first of said two additional elements releasing the second element, and the release of the second element liberating said engaged firing pin.

3. A gas gun comprising a firing pin, a recess having an inclined surface on said pin, a movable element adapted to engage said pin at its inclined surface, a retractable release trigger, said element located between said pin and said trigger, two parallel chambers, said pin in a first chamber, and said trigger in a second chamber, said movable element adapted to be disengaged from said firing pin and discharge said pin when said trigger is released.

4. A gas gun comprising a firing pin, a recess provided with an inclined surface on said pin, a retractable release trigger having an inclined surface, two parallel chambers, said pin in a first chamber, and said trigger in a second chamber, a movable element between said firing pin and said trigger, said element adapted to engage said pin on its inclined surface and hold the same in the "set" position, said element adapted to be disengaged from said firing pin and discharge the same when said trigger is released.

5. A gas gun comprising a firing pin, an inclined surface on said pin, a spring to actuate said pin, a retractable release trigger, an inclined surface on said trigger, a spring to actuate said trigger, a wall separating said pin and said trigger, a channel in said wall located between said pin and said trigger,

a movable element in said channel, said movable element adapted to engage said pin on its inclined surface when said pin is depressed and said trigger retracted, said element adapted to be displaced from said firing pin and permit its discharge when said trigger is released.

6. A gas gun comprising a firing pin, a spring to actuate said firing pin, a trigger, a spring to actuate said trigger, a wall separating said pin and said trigger, a channel in said wall between said firing pin and said trigger, a recess having an inclined surface on said firing pin, a recess on said trigger, means comprising a movable element in said channel, said element adapted to be held against said firing pin and hold the same in the "set" position when said trigger is retracted, said element adapted to be displaced from said firing pin by its inclined surface when said trigger is released and permit the discharge of said firing pin.

7. A gas gun comprising a firing pin, an inclined surface on said firing pin, a spring to actuate said firing pin, a retractable release trigger, a reduced surface on said trigger, a plane surface on said trigger, a spring to actuate said triger, a wall separating said pin and said trigger, a movable element in said wall located between said firing pin and said trigger, said element adapted to engage and hold said firing pin when said element is located between said inclined surface on said firing pin and said plane surface on said trigger.

8. A gas gun comprising a firing pin, a spring to actuate said firing pin, a trigger, a spring to actuate said trigger, a wall separating said pin and said trigger, a movable element in said wall, said firing pin and its spring adapted to be depressed, said firing pin adapted to be held depressed by said movable element, said trigger and its spring adapted to be retracted, said retracted trigger cooperating with said movable element to hold said firing pin retracted, said trigger upon release adapted to release said movable element from said depressed firing pin, and release said firing pin.

9. A discharge mechanism for a mechanical gas gun system, comprising a firing pin, a spring to actuate the same, a retractable trigger, a spring to actuate the same, a wall separating said pin and said trigger, a movable element in said wall, said element cooperating with said trigger when retracted to engage and hold said firing pin in the "set" position, the release of said trigger adapted to release said element from its engagement with said firing pin and release said firing pin.

10. A mechanical gas gun system comprising a firing pin chamber, a retractable firing pin in said firing pin chamber, a spring to actuate said firing pin, a trigger chamber, a retractable trigger in said trigger chamber, a spring to actuate said trigger, said chambers separated by a wall, an opening in said wall, a spring supported movable element adapted to move in said opening, said trigger when retracted adapted to hold said movable element against said firing pin and hold the same retracted, said trigger when released adapted to release said movable element and permit the discharge of said retracted firing pin.

In testimony whereof I hereby affix my signature.

FRANK J. BRIDGEMAN.