United States Patent [19]

Baxendale

[11] **3,832,100**

[45] **Aug. 27, 1974**

[54] **TOOLING FOR RECEIVING AND SUPPORTING A QUANTITY OF POWDER MATERIAL TO BE PRESSED INTO A SELF-SUPPORTING COMPACT**

[75] Inventor: **Kenneth C. Baxendale,** Macedon, N.Y.

[73] Assignee: **The Gleason Works,** Rochester, N.Y.

[22] Filed: **Jan. 5, 1973**

[21] Appl. No.: **321,437**

[52] **U.S. Cl.** ..... **425/78,** 425/405 H

[51] **Int. Cl.**..... **B30b 5/02,** B30b 11/02, B29d 15/00

[58] **Field of Search** ..... 425/405 H

[56] **References Cited**

UNITED STATES PATENTS

2,152,738	4/1939	Jeffery	425/405 H X
3,034,191	5/1962	Schaefer	425/405 H X
3,239,591	3/1966	Wendt	425/405 H X
3,454,997	7/1969	Lignon et al	425/405 H
3,561,079	2/1971	Anderson	425/405 H X
3,593,373	7/1971	Loomis	425/405 H X

Primary Examiner—J. Howard Flint, Jr.

Attorney, Agent, or Firm—Ralph E. Harper

[57] **ABSTRACT**

Isostatic tooling for receiving and supporting a quantity of powder material which is to be pressed into a self-supporting compact having a bore extending therethrough is described with reference to isostatic compacting techniques which utilize such tooling. The tooling includes a relatively rigid base member for supporting and positioning a core rod element extending into a deformable mold which can be suspended in a pressure vessel for receiving a high force for compacting a quantity of powder material contained within the deformable mold.

12 Claims, 10 Drawing Figures

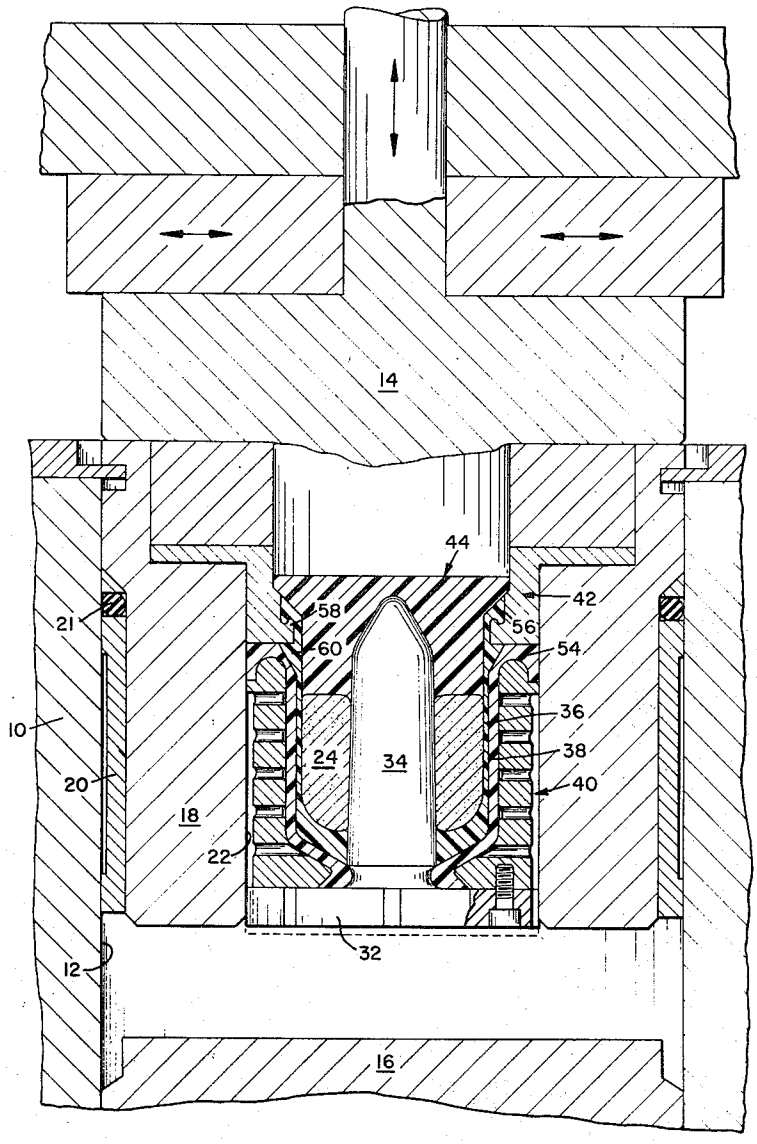

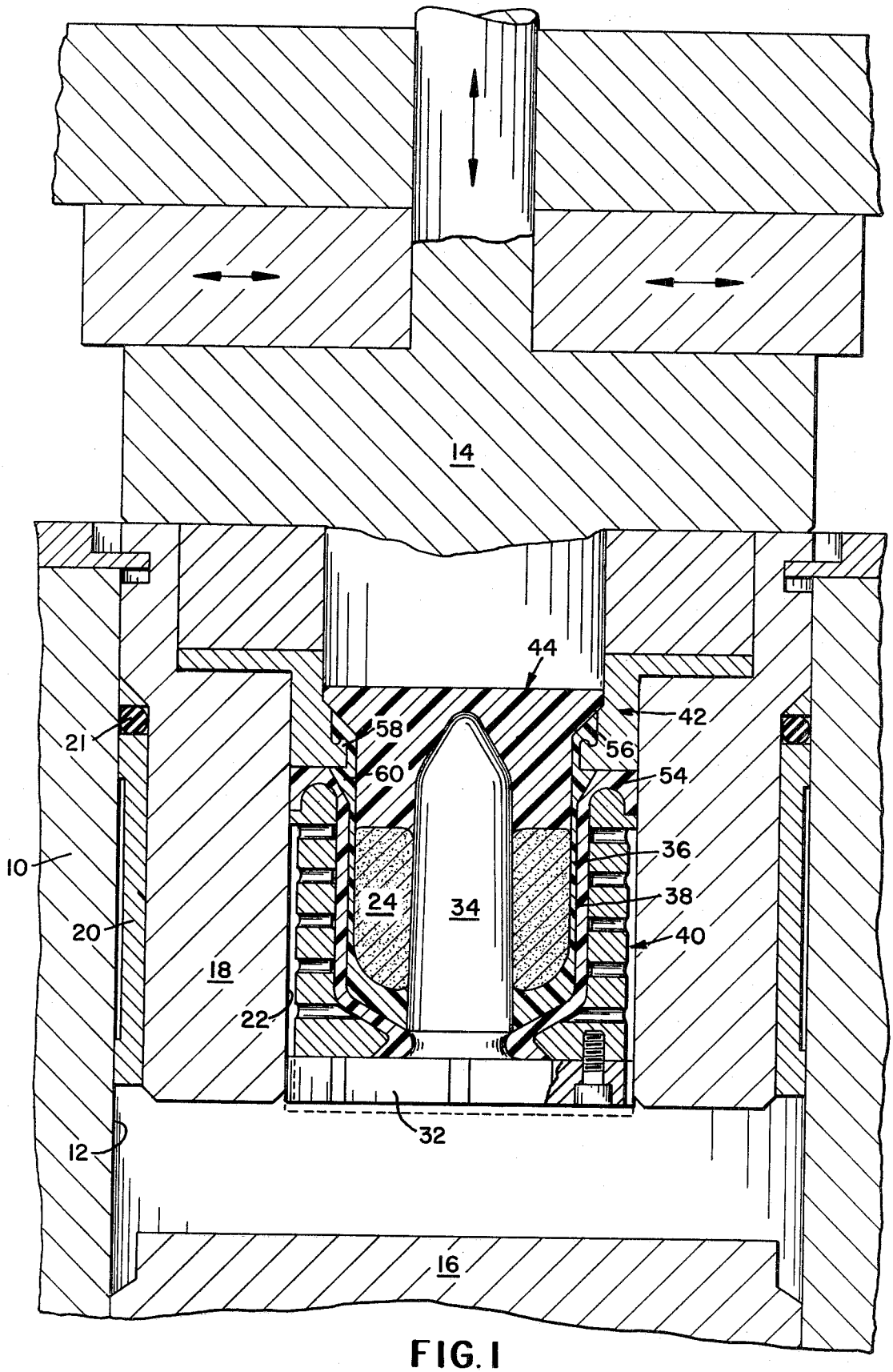

FIG. 1

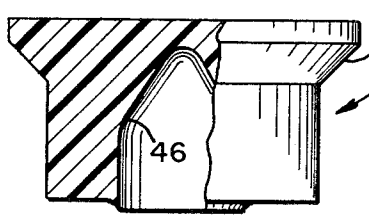

FIG. 2

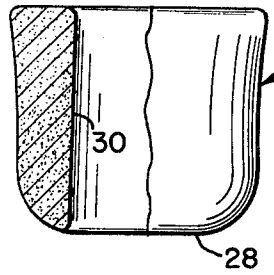

FIG. 3

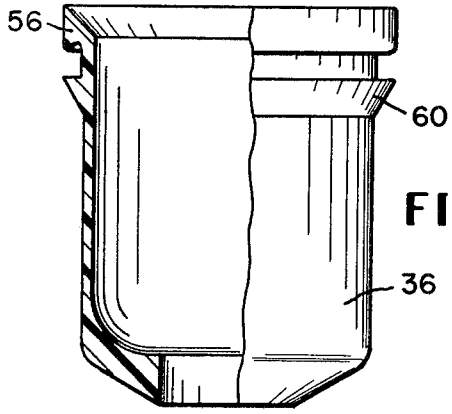

FIG. 4

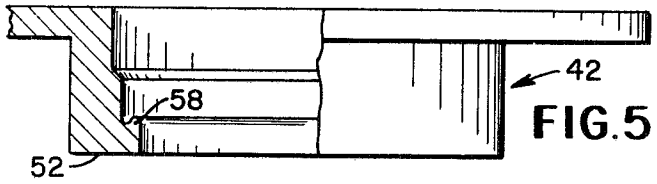

FIG. 5

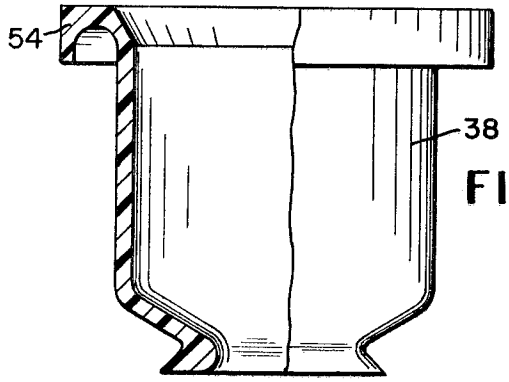

FIG. 6

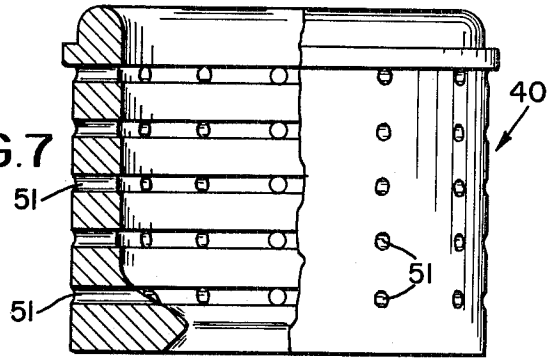

FIG. 7

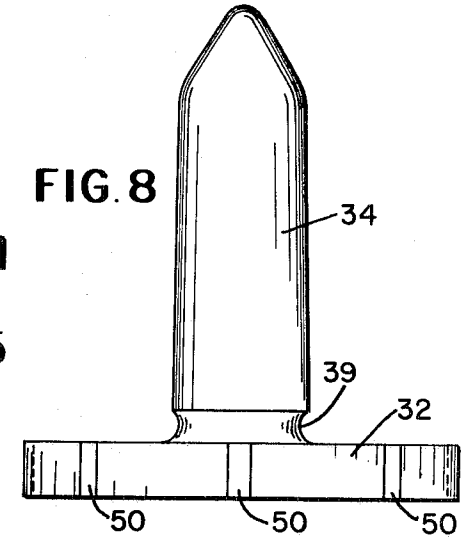

FIG. 8

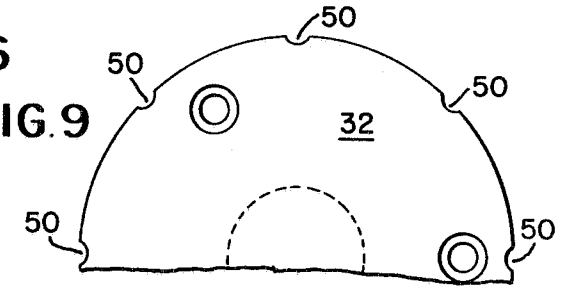

FIG. 9

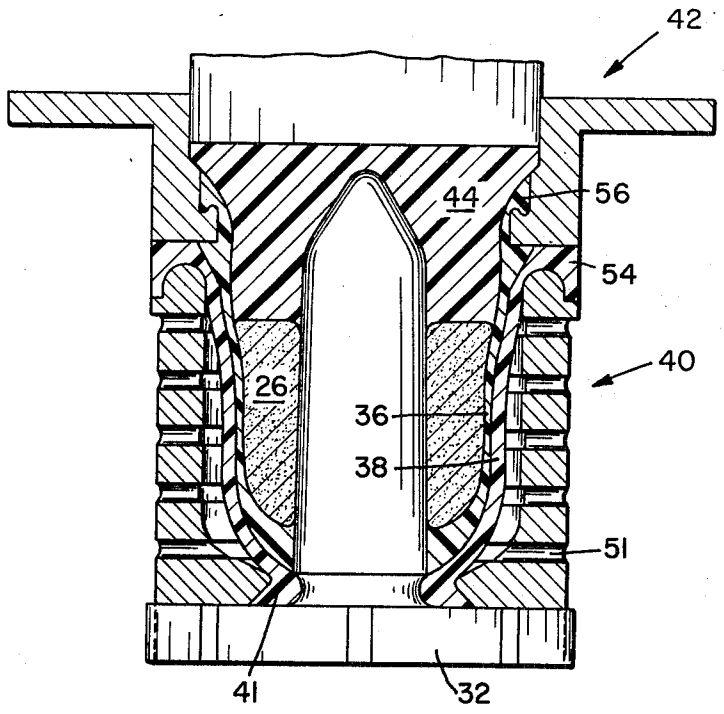

FIG. 10

TOOLING FOR RECEIVING AND SUPPORTING A QUANTITY OF POWDER MATERIAL TO BE PRESSED INTO A SELF-SUPPORTING COMPACT

RELATED APPLICATION

This application is related to subject matter described in a U.S. application, Ser. No. 321,438, entitled "Improved Apparatus for Compacting Material," filed even date herewith in the names of Kenneth C. Baxendale, Werner E. Bergemann, David B. Camp, John L. Evershed, Mason M. Howlett, and Robert A. Waasdorp.

BACKGROUND AND BRIEF DESCRIPTION OF INVENTION

It is known in the art to apply a force to a powder material by placing a quantity of the powder material in a deformable mold and then subjecting some or all of the external surfaces of the mold to a relatively high pressure. Such a compacting procedure is typically referred to as isostatic compacting because, in theory at least, there is an equal application of pressure to all sides of the quantity of material, and this results in a uniform compaction and increase in density of the material. One form of isostatic compaction involves the loading of a powder material into an elastomeric "bag" or other deformable mold at a point outside of a pressure vessel, followed by an immersion of the loaded bag into a liquid system supplied to a chamber within the pressure vessel. This type of isostatic compacting is more generally referred to as "wet bag" compacting, and its provision for complete immersion of the compactible material in a liquid bath which is pressurized results in a true isostatic compaction of the material.

A modified form of isostatic compaction involves the loading of a bag, or deformable mold, with a powder material while the bag is positioned within a chamber of a pressure vessel. After loading, the pressure vessel is closed, and a fluid pressure force is applied to certain of the external surfaces of the bag so as to compact the powder material contained therein. This technique is referred to as "dry bag" compacting and is usually described as a form of isostatic compacting even though a part of the external surface area of the deformable mold is not subjected to direct pressure from the fluid system operating in the pressure vessel. However, substantially theoretical isostatic compacting is achieved because indirect forces are applied to all unexposed surfaces of the mold so as to provide for a substantially simultaneous and equal pressure from every direction. The just described dry bag technique offers an advantage of increased production capability by the fact that the deformable mold is filled with a powder material and later unloaded without any required movement of the mold itself from the confines of the pressure vessel.

A further form of modified isostatic compaction involves a simulation of a fluid system through the use of relatively soft or flowable substances, such as certain elastomeric materials, which are placed around the quantity of material to be compacted (or around a deformable mold in which the material is contained), and the relatively soft substances impart substantially uniform pressure to all sides of the material being compacted when mechanical forces are applied to the soft substances. Generally, this technique is described as a

dry bag technique when a deformable mold is filled in place in a pressure vessel.

The present invention is mainly concerned with improvements in tooling for the various types of isostatic compaction discussed above, although the principles of the invention are primarily applicable to dry bag techniques for isostatic compaction. More specifically, the invention is concerned with improved tooling for producing certain forms of self-supporting compacts having bores extending therethrough. In the context of this specification and its claims, references to tooling are intended to include the various structures used for supporting and positioning a quantity of compactible material within a chamber defined within a pressure vessel so that relatively high forces can be applied to the compactible material to cause the material to become more dense.

In the art of forming gear structures from powder material, there has developed a technique which requires the production of an intermediate compact form which can be heated and treated to establish a final form and shape for the gear structure. The intermediate form must be self-supporting for ease of handling in subsequent heating and treating steps, and it has been discovered that great care must be observed in the manufacture of the intermediate compact form in order to assure a precision shaping of the final gear structure to be produced. Various isostatic compacting techniques have been used for producing desired density and other characteristics for intermediate compact forms, but it has been a problem of the art to provide for a high rate of production of compact forms with known isostatic compacting equipment.

In accordance with the present invention, substantially improved compacts are produced by isostatic equipment through the use of improved isostatic tooling which carefully controls the formation of a powder metal compact in a high pressure environment. The tooling is of a type which provides for a compact having a bore through its center axis. Positioning of the bore is carefully controlled so as to assure a precise distribution of material about the bore position. This establishes desired metallurgical and dimensional characteristics for a final gear shape having a bore therethrough, as produced by heating and forming (increasing of density to nearly 100 per cent theoretical density by known techniques such as forging) steps subsequently applied to the intermediate compact form.

The isostatic tooling of the present invention is designed to receive and support a quantity of compactible material which is to be pressed into a self-supporting compact having a bore extending therethrough, and this is accomplished by a combination including a base member which can be fitted into a chamber defined within a pressure vessel for reacting to a fluid pressure force introduced into the chamber, a core rod rigidly fixed to the base member for defining the position and shape of a precisely located bore through the compact to be formed, a deformable mold means mounted on the base member so as to define a compacting zone which includes the core rod element along a center axis thereof, with the deformable mold means having an open end through which powder material is introduced and a formed compact is removed, a manifold means surrounding the deformable mold means to support the mold means in an initial shape and size in which it is filled with powder material with the manifold means

having fluid passages extending therethrough to supply pressurized fluid to outside surfaces of the deformable mold means, and deformable plug means for closing the open end of the deformable mold means during a compacting operation with the deformable plug means being of a size and shape to extend into the compacting zone so as to tend to expand axially inwardly toward the compacting zone as its outside surfaces are squeezed by a fluid pressure force applied to outside surfaces of the deformable mold means.

In another sense, the invention constitutes an improvement in forming apparatus comprising a deformable mold defining an open-ended cavity for holding a quantity of powder material while the powder material is being formed into a self-supporting compact with the cavity being larger in volume than the final volume of the compact to be formed and with the deformable mold having a closed end which is generally concave on its interior surface to define the shape of a convex surface of the formed compact, together with core rod means extending from the closed end of the deformable mold along the center axis of the mold, a deformable plug means for closing the open end of the cavity during a molding operation, and supporting means for installing the deformable mold and the core rod in a pressure vessel so that the core rod reacts to axially directed forces within the pressure vessel without interference with forces being applied to the compactible material.

In the context of the present specification and its claims, reference will be made to certain terms and phrases which are generally used and understood by persons skilled in this art. For example, reference will be made to "compactible" materials, and this is meant to include any material which can be pressed to a new shape or to an increased density by an application of force thereto. This includes loose material, usually in the form of a powder, and the powder can include various known metal, synthetic plastic, ceramic, and cermet materials, and the like. Also, this term includes material which has been previously compacted and which can be further compacted to an increased density and new size or shape. Reference will also be made to "deformable" mold means, and this is meant to include elastomeric bag or diaphragm structures designed to contain a material during compaction. Such structures can be made from various forms of polyurethane and other elastomeric materials which offer characteristics of resilience, deformability, and recoverability of shape and size after being deformed. The use of the term "isostatic" herein is intended to include the various types of pure and modified isostatic compaction discussed at the beginning portion of this specification. These and other features and definitions of the present invention will become apparent in the more detailed discussion which follows. In that discussion reference will be made to the accompanying drawings as briefly described below.

BRIEF DESCRIPTION OF DRAWINGS

FIG. **1** is an elevational view, in cross section, of the isostatic tooling of FIG. **1** as assembled and installed in a pressure vessel;

FIG. **2** is an elevational view, partly in section, of a deformable plug means used with the tooling of this invention;

FIG. **3** is an elevational view, in the scale of FIG. **2**, showing a finished compact formed with the tooling of FIGS. **2** and **4–8**;

FIG. **4** is an elevational view, in the same scale as FIGS. **2** and **3**, of an inner elastomeric sleeve;

FIG. **5** is an elevational view, in the scale of FIGS. **2–4**, of a locating ringmeans;

FIG. **6** is an elevational view, in the scale of FIGS. **2–5**, of an outer elastomeric sleeve;

FIG. **7** is an elevational view, in the scale of FIGS. **2–6**, of a manifold means;

FIG. **8** is an elevational view, in the same scale as FIGS. **2–7** of a core rod and base plate assembly used with the tooling of this invention;

FIG. **9** is a bottom plan view of a portion of the assembly illustrated in FIG. **8**; and

FIG. **10** is a view similar to FIG. **1** with portions of the FIG. **1** details omitted so as to emphasize the general condition of the isostatic tooling during a compacting operation.

DETAILED DESCRIPTION OF INVENTION

The isostatic tooling of the present invention is of a general type which can be used in known isostatic compacting equipment in which a relatively high force, on the order of 40,000 to 50,000 psig or even higher, can be applied to a compactible material to increase the density of the material and to change its shape so as to form a self-supporting compact which can be subjected to further treatments to produce a desired product. Compacting operations of this type typically involve the placement of the compactible material in a deformable mold which is suspended within a pressure vessel for receiving an isostatic force when the pressure vessel is closed and pressurized. The isostatic force may be developed by injection of a fluid into a chamber in the pressure vessel in which the deformable mold is suspended, or it may be developed by application of force to a fluid, or a simulated fluid, already contained within the chamber of the pressure vessel. The isostatic tooling which will be discussed below has particular use as a dry bag type of equipment for use in a pressure vessel having a self-contained isostatic pressurizing system, but the tooling of this invention may be used with other forms of equipment and with other methods for pressurizing a pressure vessel.

Referring to FIGS. **1–10**, the basic components making up the isostatic tooling of this invention are illustrated with reference to an assembly which can be suspended within a cylindrical chamber formed in a typical pressure vessel structure. The isostatic tooling is designed to provide for a product having a shape and form in which a bore is defined through a center axis thereof. As discussed above, it is very important and critical to a successful formation of certain intermediate compact forms to provide for a very precise location of the bore in the compact, and the isostatic tooling of this invention is directed to improvements which assure correct placement of a bore in a compact in a high production compacting system.

FIG. **1** illustrates the isostatic tooling of this invention as installed in compacting apparatus which includes a pressure vessel **10** having a bore **12** formed therethrough to define a main compacting chamber within the pressure vessel and having closing means **14** and **16** at opposite ends of the bore for sealing the compacting chamber during a compacting operation. The illus-

trated embodiment includes an annular mounting sleeve **18** for defining a smaller diameter chamber to receive isostatic tooling within the main chamber defined within the pressure vessel, but the annular mounting sleeve **18** can be omitted or dimensionally changed from what is illustrated in FIG. **1** if a different diameter of isostatic tooling is to be suspended within the pressure vessel. The illustrated arrangement includes a slip sleeve **20** for centering the annular mounting sleeve **18** within the bore **12** of the pressure vessel, and this provides for a centered cylindrical chamber **22** for receiving the illustrated isostatic tooling. In addition, the slip sleeve **20** functions to lock and precompress an O-ring seal **21** in place, and this also prevents dislodgment of the O-ring seal when the pressure vessel is depressurized. Once the isostatic tooling is installed in place and a measured quantity of compactible material **24** introduced therein, the pressure vessel can be closed and sealed with its closing means **14** and **16** to allow a pressurization of the chamber within which the isostatic tooling is suspended. Pressurization can be accomplished by applying a compressing force to a liquid contained within the main chamber of the pressure vessel, or a high pressure liquid may be injected into the vessel chamber from an external source. The pressurized liquid moves into the smaller diameter chamber **22** within which the isostatic tooling is carried and is uniformly distributed around the quantity of material **24** to be compacted so as to impart a substantially uniform force to the compactible material from all directions.

FIGS. **2–9** illustrates the various components which are assembled together to form the isostatic tooling installation illustrated in FIG. **1.** In the FIG. **3** view, the quantity of compactible material is illustrated as a finished compact **26** having a convex surface configuration **28** at one end thereof and a bore **30** formed through its center axis so as to pass completely through the compact and through the one end on which the convex surface configuration is formed. The finished compact **26** is a self-supporting product which can be subjected to further handling and treating to produce a final product. The final product may be of the identical form and size as the illustrated compact **26** or it may constitute a new shape and size resulting from a subsequent forming operation applied to the intermediate compact form which is illustrated. The illustrated compact is symmetrical about its center axis, and the bore **30** is precisely positioned on the center axis.

An important component of the isostatic tooling of this invention is the base member **32** (FIGS. **8** and **9**) which functions to support and position a core rod means **34** for defining the bore to be formed in a compact. The base member **32** constitutes a rigid non-deformable structure which can be closely fitted (for example, within 0.002 inch or 0.0508 mm) within the diameter of the chamber **22** within which the isostatic tooling is to be placed. The outer cylindrical periphery of the base member **32** closely matches the cylindrical shape of the chamber **22** so as to provide for a centering of the base member **32** and the core rod means **34** within the chamber **22.** The core rod means **34** may constitue an integral structure with the base member **32,** formed from the same rigid material (such as steel), or may constitute a separate component which is secured to the base member **32.** The core rod means **34** is preferably slightly tapered towards its free end to facilitate removal of a compacted part.

The base member **32** supports a deformable mold means which is illustrated as including an inner elastomeric sleeve member **36** (FIG. **4**) and an outer elastomeric sleeve member **38** (FIG. **6**) to define an open-ended cavity for holding a quantity of powder material while the powder material is being formed into the illustrated self-supporting compact **26.** The inner and outer elastomeric sleeve members are assembled together so as to be in substantial face-to-face contact with one another, and each of the elastomeric sleeve members includes an opening through its bottom wall portion for receiving the core rod means **34** therethrough. The assembled relationship is illustrated in FIG. **1** wherein it can be seen that the core rod means **34** completely closes the bottom of the deformable mold so that no powder material will escape from the deformable mold during a compacting operation. In a preferred embodiment, the core rod means includes a reduced diameter portion or groove **39** at a section at which the deformable mold means engages the core rod element so as to provide for a tight sealing engagement between the deformable mold means and the base member **32** during a compacting operation. Although the deformable mold means may be formed from a single layer of elastomeric material, the compound arrangement which is illustrated is preferred so as to provide for relatively easy replacement of the inner elastomeric sleeve member **36** as is necessary from continued flexing and contact of the inner elastomeric sleeve member with the material being compacted. Also, the compound arrangement allows a use of a softer outer sleeve member **38** (having better flow characteristics during pressurization of the chamber in which it is installed) than would be possible if the same sleeve member were in contact with the material being compacted. The inner and outer elastomeric sleeve members are held together by frictional contact between the two members.

The base member **32** also supports a manifold means **40** (FIG. **7**), in the form of a rigid sleeve, for distributing fluid to all external surfaces of the deformable mold means. The manifold means **40** is of a significantly smaller external diameter than the diameter of the chamber **22** so as to provide sufficient clearance for a free flow of a pressurizing medium all around the manifold means. The inside diameter and shape of the manifold means is designed to define the unpressurized condition of the deformable mold means.

The isostatic tooling assembly further includes a locating ring means **42** (FIG. **5**) for positioning and suspending the isostatic tooling within the chamber of the pressure vessel. The locating ring means **42** comprises a relatively rigid structure, formed from metal or other non-deformable material, for carrying the full weight of the isostatic tooling and its contents when the isostatic tooling is connected thereto and lowered into the chamber of the pressure vessel.

A final component of the isostatic tooling comprises an elastomeric plug means **44** (FIG. **2**) of special design for insertion into the compacting zone defined by the cavity within the deformable mold means. The deformable plug means **44** includes a recess **46** in one end thereof for receiving a terminal end portion of the core rod element **34** when the deformable plug means is inserted into the deformable mold for closing the deformable mold during a compacting operation. The recess **46** may be formed with a slightly smaller diameter than

the outside diameter of the core rod **34** so as to provide a wiping action that cleans the core rod as the plug means is inserted in the deformable mold means. A tapered surface **47** of the plug means functions to block the upper end of the inner elastomeric sleeve **36** to prevent extrusion of the sleeve.

When the components of the isostatic tooling of this invention are assembled together and installed in a pressure vessel, certain relationships are established as illustrated in FIGS. **1** and **10.** As already discussed, the base member **32** and the core rod element **34** carried thereby establish a precisely centered position for the core rod element within the chamber **22** of the pressure vessel. Further, the bottom (in the orientation of FIGS. **1** and **10**) face of the base member **32** functions as a reaction surface for reacting to a force applied thereto by whatever isostatic system is incorporated in the pressure veseel **10.** For example, a system which applies a force to a quantity of liquid contained within the chamber **12** of the pressure vessel will result in an application of that force to the bottom face of the base member **32** installed within the smaller diameter chamber **22.** The same fluid force is distributed past the base member **32** through grooves **50,** formed in its outer surface, so as to apply a force around the entire circumference, and for the full length, of the manifold means. This force is applied to the deformable mold means by a direct contact of the pressurized fluid with outside surfaces of the outer elastomeric sleeve **38** as a result of a flow of pressurized fluid through openings **51** formed through the manifold means **40.**

During a compacting operation, the inner and outer elastomeric sleeve members **36** and **38** of the deformable mold assume the general positions and conditions shown in FIG. **10.** During such compaction, the deformable mold means is pushed upwardly by the isostatic force applied to the bottom of the base member **32,** and, at the same time, the deformable mold means is compressed radially inwardly toward the center axis of the compacting zone, thereby resulting in a thickening of the bottom portions of the deformable mold due to compression of the elastomeric material from which it is made. This action results in a tight sealing engagement between a sealing lip **41** of the outer elastomeric sleeve member **38** and the core rod element **34.** Also, this action prevents any tendency for the compacted material to extrude axially as a result of the application of force radially inwardly around the compacting zone defined within the deformable mold means.

High pressure sealing is maintained at the upper end of the isostatic tooling by specific structural relationships provided at that end of the tooling. The locating ring means **42** includes a relatively broad annular face **52** which functions as a sealing face receiving the force of the upper end of the outer elastomeric sleeve **38** as the deformable mold means is pressed upwardly by the base member **32** and the manifold sleeve. In this sense, the locating ring means **42** functions to back up and support a mounting flange **54** provided at the upper end of the outer elastomeric sleeve structure **38.** The inner elastomeric sleeve member **36** is provided with a terminal end portion extending beyond the mounting flange of the outer elastomeric sleeve member and is provided with its own mounting flange **56** for being received in sealing engagement with a mounting lip structure **58** of the locating ring means **42.** In addition, the inner elastomeric sleeve member **36** is provided with an increased diameter band or section **60** which functions to reinforce the inner elastomeric sleeve member at the level where the upper terminal end **54** of the outer elastomeric sleeve member would tend to move inwardly and upwardly along the bore of the mounting lip **58** of the locating ring means **42.** The forces which have been discussed so far involve an upwardly directed force and radially inwardly directed forces working on the isostatic tooling in the orientation shown in FIG. **1.** A combination of these forces tends to squeeze the deformable plug means **44** radially inwardly, and the size and shape of the plug means is such that this squeezing action resists any tendency for the compactible material to extrude axially upwardly in the direction of the plug means. If anything, there may be a slight downward force applied to the compactible material by the tendency of the deformable plug means **44** to extrude inwardly toward the compacting zone, and this tendency results in a very uniform distribution of forces towards the compacting zone from all directions even though there is no fluid force contact with the upper end of the deformable mold means and its plug.

Another characteristic of the tooling assembly of this invention is that it provides for an automatic compensation for different volumes of fill of powder in the deformable mold means. It is known that even a precisely measured weight of metal powder will vary slightly in volume from one weighed quantity to another, and yet, it is important that weight be used as a measure for controlling uniformity of the final product. In practice, a given weight of powder is introduced into the deformable mold means, and the mold means is then plugged so that the pressure vessel can be sealed and pressurized. The plug means must be of a sufficient dimension to extend downwardly into the mold means far enough to contact the upper surface of the powder contained therein at whatever lowest level (volume of fill) can be expected for the powder. It is essential to prevent any voids between the plug means and the powder because voids or air pockets can result in improperly formed, and even cracked, parts. However, if the plug means is designed to extend downwardly into the mold means for the maximum distance required to contact a low volume level of powder, the same plug means will contact a higher level (greater volume) of powder before full insertion into the mold means. If this happens, the tooling assembly of this invention stretches slightly (downwardly to dotted line position in the FIG. **1** view) during insertion of the plug means into the mold means so as to allow full insertion of the plug means into the open top of the mold means.

Having described a specific embodiment of the present invention, it can be appreciated that certain changes in design can offer the full equivalent of the structures and functions which have been discussed above. All such equivalent changes are intended to be included within the scope of protection defined in the claims which follow.

What is claimed is:

1. Tooling for receiving and supporting a quantity of compactible material which is to be pressed into a self-supporting compact having a bore extending therethrough, comprising

a base member which can be fitted into a chamber defined within a compacting apparatus for reacting to a force applied thereto,

a core rod element rigidly secured to said base member for establishing a precision location of a bore to be formed through a compact, said core rod element having a reduced diameter portion forming a continuous groove adjacent the point at which it is secured to said base member,

a compound deformable mold means mounted on said base member for defining an open ended compacting zone around said core rod element, said compound deformable mold means having an inner elastomeric sleeve member and an outer elastomeric sleeve member, said inner elastomeric sleeve member being in contact with said outer elastomeric sleeve member and with said core rod element, said outer elastomeric sleeve member being tightly fitted around said core rod element at the level of and in sealing engagement with the reduced diameter portion thereof, and

a deformable plug means for closing the open end of said compacting zone, said deformable plug means having a recess formed therein for receiving a terminal end of said core rod element when said deformable plug means is inserted into said compacting zone.

2. The isostatic tooling of claim **1** wherein said sealing engagement of the outer sleeve member with the core rod element is provided by a bottom wall structure of the outer sleeve member, said bottom wall structure having an opening therethrough for receiving said core rod element and including a sealing lip means around the perimeter of the opening for tightly engaging the core rod element at its reduced diamter portion.

3. The isostatic tooling of claim **2** wherein said outer elastomeric sleeve member further includes a mounting flange at its end opposite to said bottom wall, said mounting flange being formed radially outwardly relative to the main body of the outer elastomeric sleeve member for being mounted on an annular end portion of a manifold means which surrounds said outer elastomeric sleeve member.

4. The isostatic tooling of claim **3,** and including a non-deformable annular mounting ring element which functions to locate and suspend said deformable mold means in a pressure vessel, said annular mounting ring element having an annular face portion for backing and supporting said mounting flange of said outer elastomeric sleeve member.

5. The isostatic tooling of claim **4** wherein said inner elastomeric sleeve member is fitted within said outer elastomeric sleeve member, and wherein said inner elastomeric sleeve member includes a terminal end portion extending beyond said mounting flange of the outer elastomeric sleeve member, said terminal end portion of the inner elastomeric sleeve member having its own mounting flange formed radially outwardly therefrom for being received to said annular mounting ring element.

6. The isostatic tooling of claim **5** wherein said inner elastomeric sleeve member includes an increased diameter band about its external circumference at the level where said inner elastomeric sleeve member contacts the terminal end of said outer elastomeric sleeve member.

7. In forming apparatus of the type in which a quantity of compactable material is received within isostalic tooling carried in on isostatic chamber of a pressure vessel, the improvement in said isostatic tooling comprising

a deformable mold having an open end and an opposite end for defining an open-ended cavity for receiving quantity of compactible material which can be formed into a self-supporting compact, said cavity being larger in volume than the final volume of the formed compact, said opposite end having an opening therethrough,

core rod means extending through said opening of said opposite end of the deformable mold along the center axis of the mold,

supporting means for suspending said deformable mold and said core rod means in said pressure vessel, said supporting means including (a) a rigid base member means for supporting said core rod means, said core rod means being rigidly secured to said base member means, and said base member means being exposed to isostatic forces in the isostatic chamber of said pressure vessel so as to provide axial as well as radial compaction of compactible material contained within the deformable mold and (b) means in combination with said base member means for supporting said deformable mold, and

deformable plug means for closing the open end of said cavity during a molding operation.

8. The improvement of claim **7** wherein said deformable mold is a compound mold made up from inner and outer elastomeric members.

9. The improvement of claim **8** wherein said inner elastomeric member comprises an elastomeric sleeve structure which is relatively thicker through its bottom end wall than through its side walls.

10. The improvement of claim **9** wherein said outer elastomeric member comprises an elastomeric sleeve fitted around an external surface area of said inner elastomeric sleeve.

11. The improvement of claim **7** and including means for securing only the open end of said deformable mold relative to said pressure vessel so that said deformable mold means can stretch along its longitudinal axis in response to a contact of said plug means with said compactible material, in said deformable mold means, prior to a full insertion of the plug means into the deformable mold means.

12. Isostatic tooling which can be carried in a pressure vessel for receiving and supporting a quantity of compactible material which is to be pressed into a self-supporting compact, comprising

a deformable mold means having an open end for receiving a quantity of material to be compacted,

a deformable plug means for closing the open end of said deformable mold, and

suspending means for securing said open end of said deformable mold means in a pressure vessel so that an opposite end of the deformable mold means is unrestrained for axial movement and the deformable mold means can elongate in response to a contact of said plug means with material contained in said mold means.

* * * * *