Jan. 9, 1945. S. J. CAMPBELL 2,366,999

WEB REWINDING MACHINE

Filed March 21, 1942 5 Sheets-Sheet 1

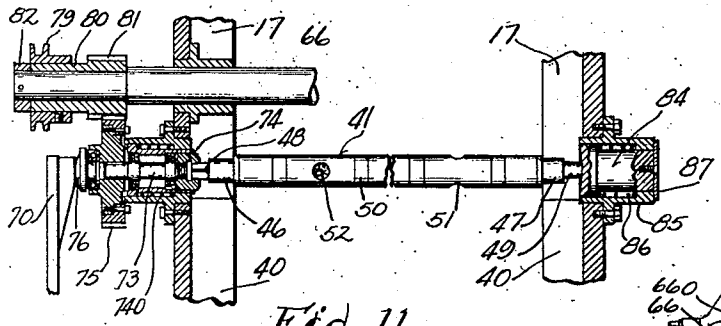

Fig. 11.

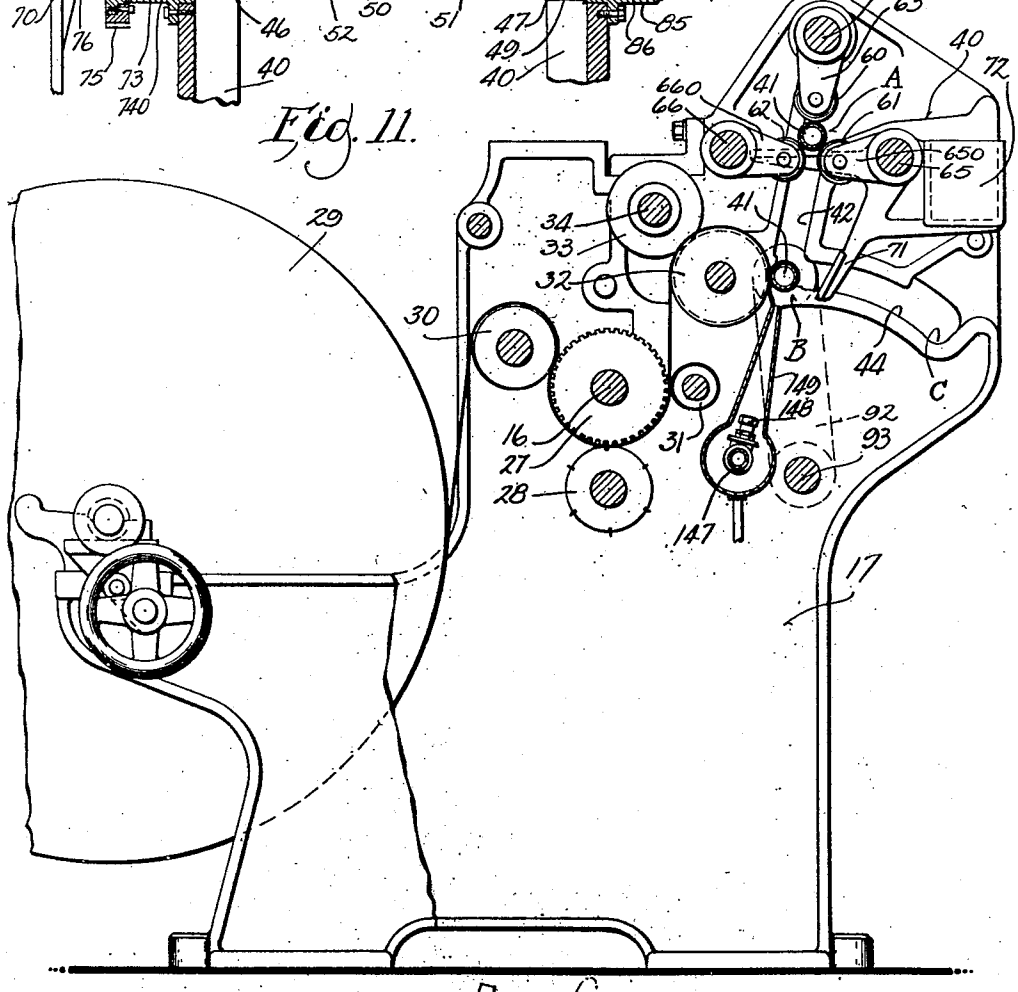

Fig. 1.

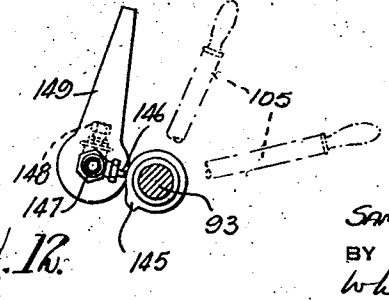

Fig. 12.

INVENTOR
SAMUEL J. CAMPBELL
BY
Wheeler, Wheeler & Wheeler
ATTORNEYS

Jan. 9, 1945. S. J. CAMPBELL 2,366,999

WEB REWINDING MACHINE

Filed March 21, 1942 5 Sheets-Sheet 2

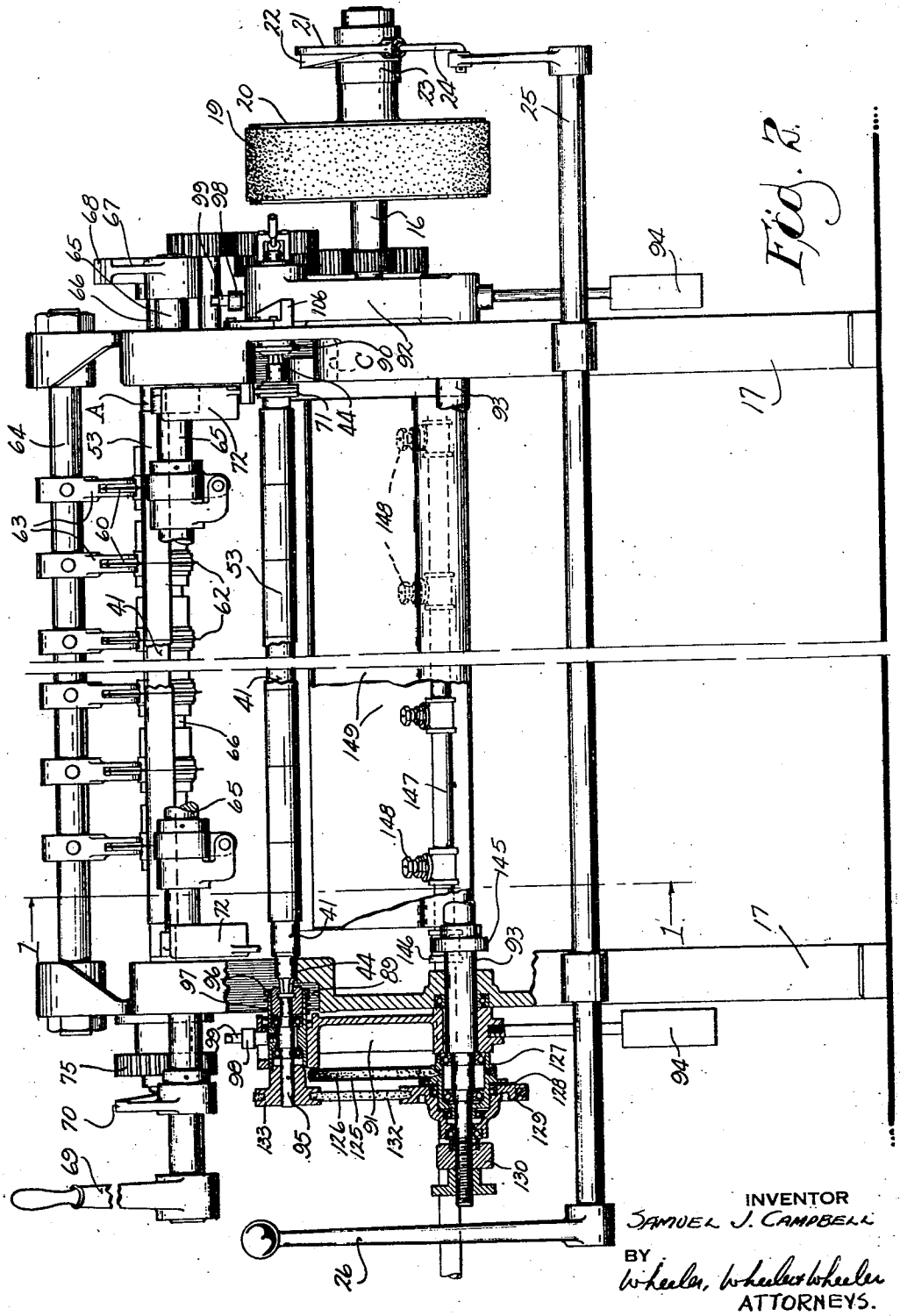

Fig. 2.

INVENTOR
SAMUEL J. CAMPBELL
BY
Wheeler, Wheeler & Wheeler
ATTORNEYS.

242 WINDING & REELING
56
Examine

Jan. 9, 1945. S. J. CAMPBELL 2,366,999

WEB REWINDING MACHINE

Filed March 21, 1942 5 Sheets-Sheet 3

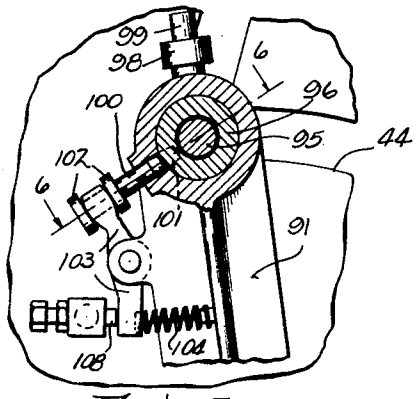

Fig. 5.

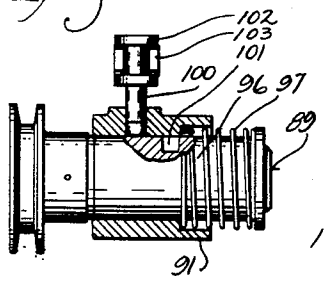

Fig. 6.

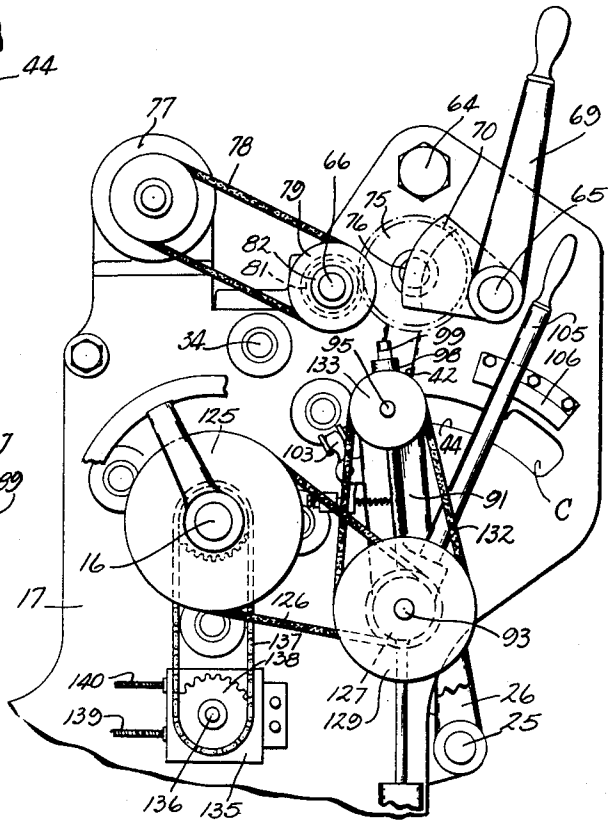

Fig. 3

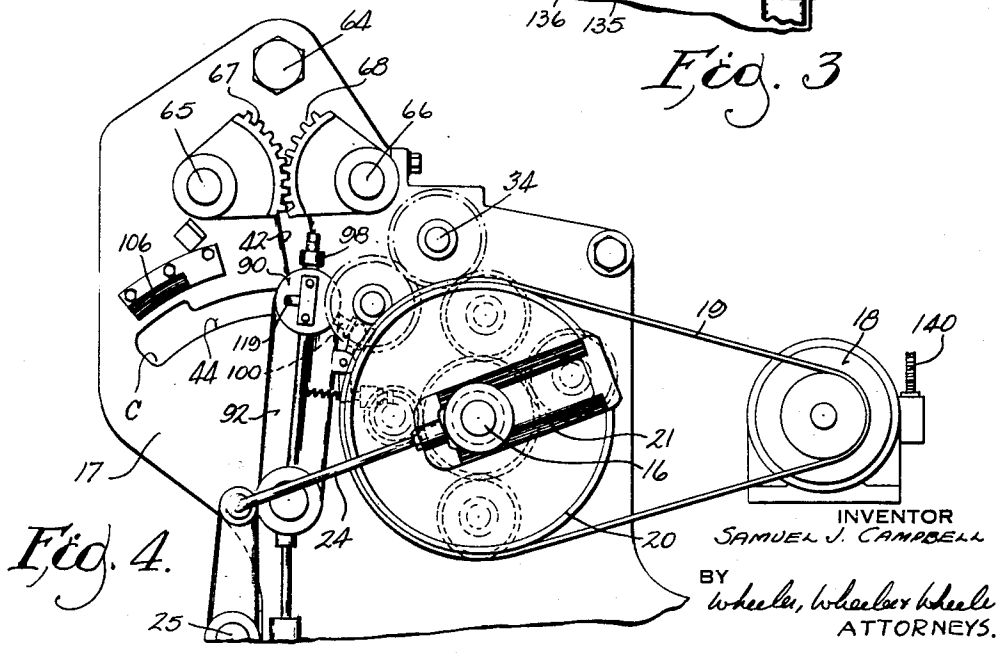

Fig. 4.

INVENTOR
SAMUEL J. CAMPBELL
BY
Wheeler, Wheeler & Wheeler
ATTORNEYS.

Jan. 9, 1945. S. J. CAMPBELL 2,366,999

WEB REWINDING MACHINE

Filed March 21, 1942 5 Sheets-Sheet 4

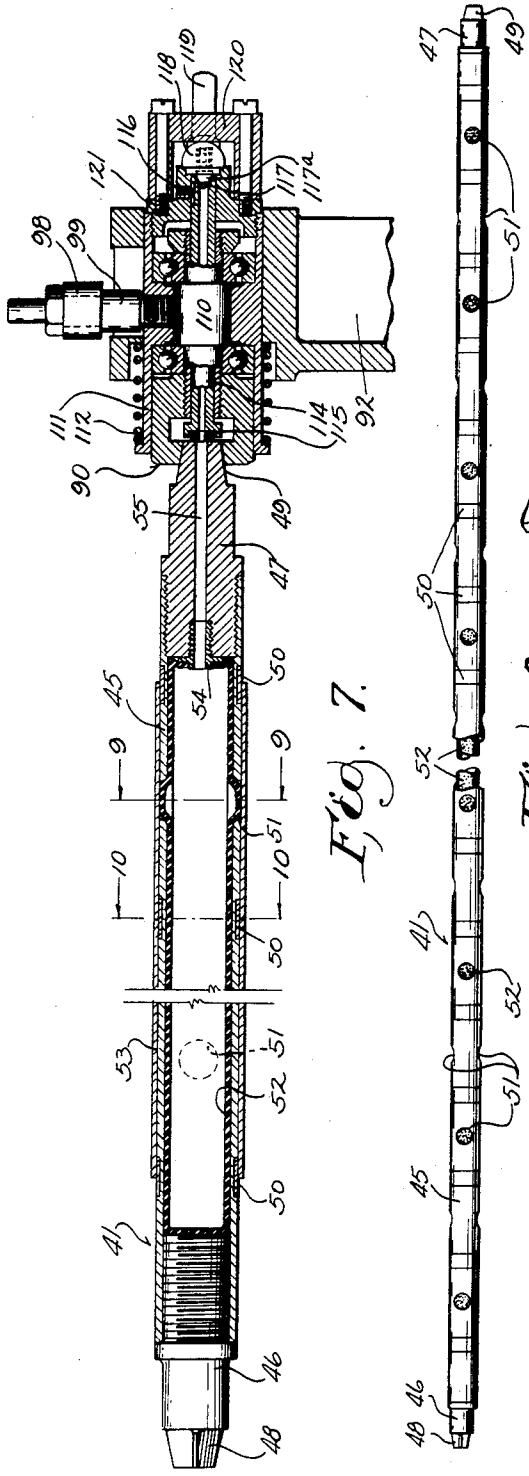

Fig. 7.

Fig. 8.

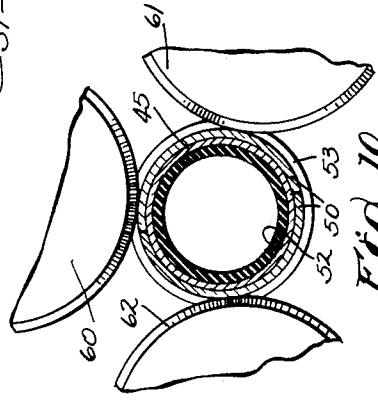

Fig. 10.

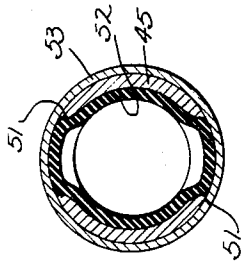

Fig. 9.

INVENTOR
SAMUEL J. CAMPBELL
BY
Wheeler, Wheeler & Wheeler
ATTORNEYS.

Jan. 9, 1945. S. J. CAMPBELL 2,366,999

WEB REWINDING MACHINE

Filed March 21, 1942 5 Sheets-Sheet 5

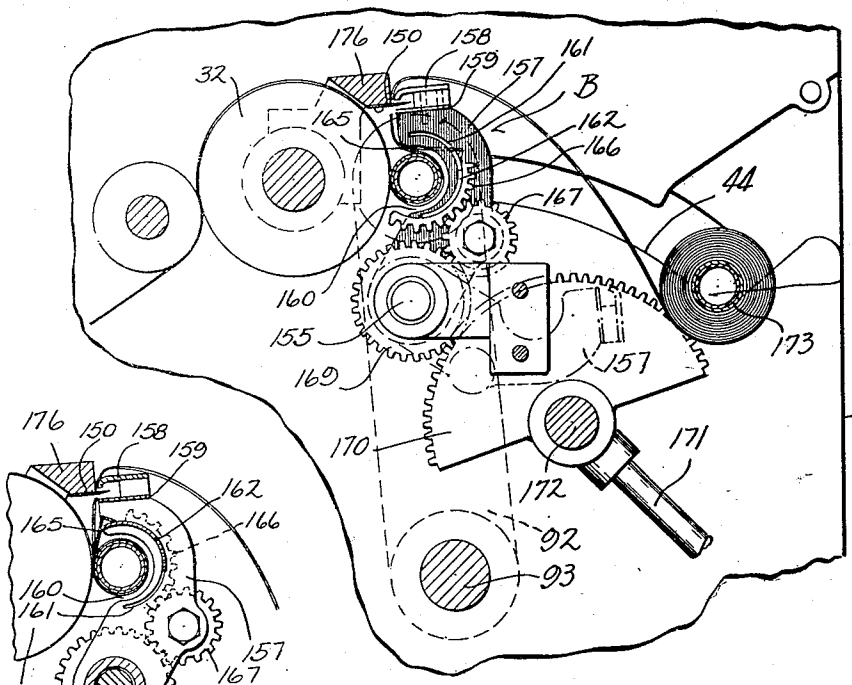

Fig. 13.

Fig. 14.

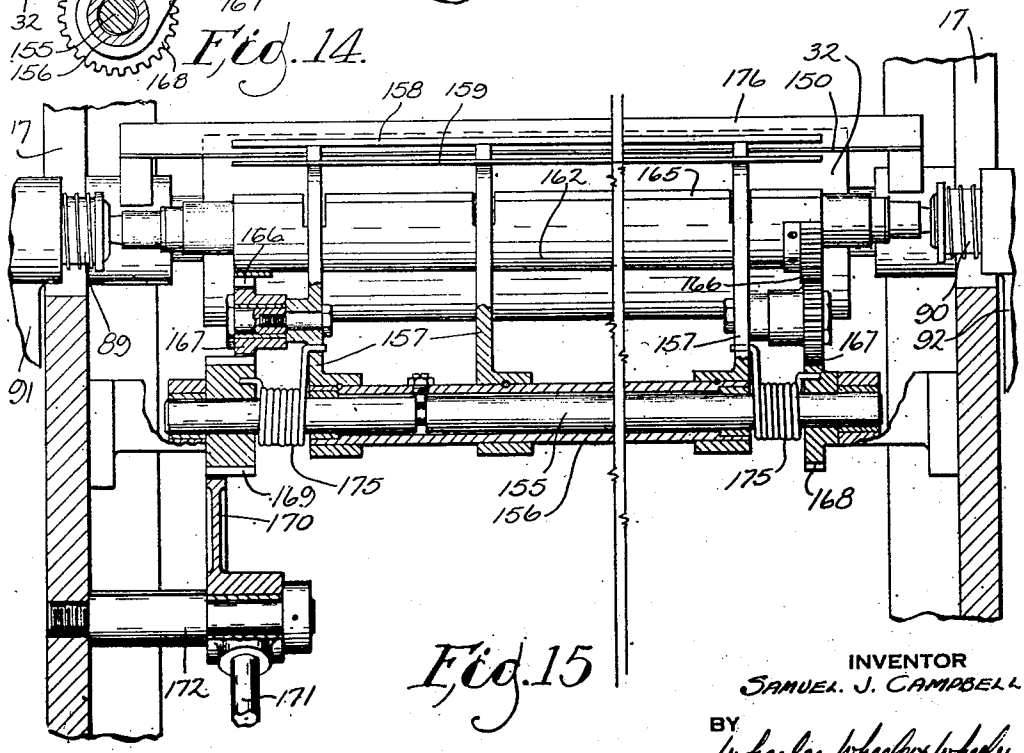

Fig. 15

INVENTOR
SAMUEL J. CAMPBELL
BY
Wheeler, Wheeler & Wheeler
ATTORNEYS.

Patented Jan. 9, 1945 2,366,999

UNITED STATES PATENT OFFICE

2,366,999

WEB REWINDING MACHINE

Samuel J. Campbell, Green Bay, Wis., assignor of one-half to Hudson Sharp Machine Company, Green Bay, Wis., a corporation of Wisconsin

Application March 21, 1942, Serial No. 435,703

62 Claims. (Cl. 242—56)

This invention relates to improvements in web rewinding machines.

The invention has many important objects including the provision of means for assuring accurate registry of the cores with the web portions to be wound thereon; the provision of means for slitting the cores upon the same machine in which the web is slit and the rewinding is accomplished, whereby the cores, instead of being threaded on to the winding core shaft, are slit directly on such shaft and immediately thereafter receive the correspondingly slit portions of the web in the winding operation; the provision of means whereby a controlled, fanlike spray of water is delivered from below on to the web, which is tensioned across the empty cores, for severing the web and causing its severed end to adhere to the cores; the provision of an alternatively available means for mechanically severing the relatively waterproof web, such as wax paper, and concurrently causing its cut end to be delivered to the empty cores upon which the web is to be wound in the next operation; the provision of means whereby a single manual operation removes a full core shaft from the machine and substitutes a new core shaft with empty cores freshly cut and accurately positioned thereon; the provision of a novel and improved means for assuring a driving connection from the core shaft to the cores during the winding operation; and the provision of novel and improved means for carrying out the above described functions to enable the machine to be operated simply, effectively and with improved speed as compared with any previously known device for the purpose, while nevertheless adapting it for operation by unskilled operators.

Other objects will be apparent to those skilled in the art upon study of the following disclosure of the invention.

In the drawings:

Figure 1 is a view taken in longitudinal section through the machine on the line 1—1 of Figure 2, portions of the machine, however, being shown in side elevation.

Figure 2 is a view of the machine in front elevation with portions broken away in transverse section.

Figure 3 is a fragmentary detail in side elevation of that side of the machine which is at the left when the machine is viewed from the standpoint of Figure 2.

Figure 4 is a similar fragmentary detail in side elevation of that side of the machine which is at the right when viewed from the standpoint of Figure 2.

Figure 5 is a view on an enlarged scale principally in side elevation but partially in longitudinal section showing details of a detent for one of the chucks.

Figure 6 is a detail taken on the line 6—6 of Figure 5.

Figure 7 is a detail view on an enlarged scale axially through a core shaft or mandrel and likewise showing in axial section the air chuck which engages the end of the mandrel at the right of the machine, as viewed from the same point of Figure 2.

Figure 8 is a detail view of the core shaft or mandrel in elevation.

Figure 9 is an enlarged cross section of the core shaft or mandrel as viewed at the line 9—9 of Figure 7.

Figure 10 shows the core shaft or mandrel in cross section on the line 10—10 of Figure 7 with the core cutting knives fragmentarily illustrated in elevation in operative relation to the core shaft.

Figure 11 is a fragmentary detail in axial section through the chucking assembly by which the core shaft is held during the core slitting operation.

Figure 12 is a fragmentary detail view in a section longitudinally of the machine intersecting the manually operable rock shaft and a water supply pipe for the paper cut off.

Figure 13 is a fragmentary detail view similar to Figure 1 showing a modified embodiment of the invention for cutting off a web which is not water permeable.

Figure 14 is a fragmentary detail of a portion of the structure illustrated in Figure 13 showing a change in position of some of the parts.

Figure 15 is a view principally in front elevation but partially in section fragmentarily illustrating portions of the machine equipped with the modified apparatus shown in Figures 13 and 14.

Like parts are identified by the same reference characters throughout the several views.

While the machine as herein disclosed may be used for many rewinding functions, it has particular utility for winding toilet paper or other tissue upon cores for distribution and use and, as modified by inclusion of the alternative web cutting mechanism shown in Figures 13 to 15, the machine is particularly useful in winding wax papers and the like upon cores for distribution and use.

That portion of the apparatus which precedes the actual rewinding operation is generally conventional and will be but briefly described.

The main shaft 16, mounted upon the frame 17, is driven from motor 18 by a belt 19 and a large pulley 20 which is free of the shaft and may be clutched thereto by movement of the yoke 21, the wedge portions 22 of which engage the clutch member 23 to clutch the pulley to the shaft 16. The yoke 21 is connected by link 24 with a rock shaft 25 having a clutch actuating hand lever 26, as clearly shown in Figures 2 and 4.

Mounted directly upon shaft 16, as best shown in Figure 1 (assuming the machine is used as a toilet rewinder or for the rewinding of towels or tissues), is a matrix roll 27 with which the knives of the perforator roll 28 coact to perforate the web.

The web is drawn from a parent roll 29, passes over the felt covered roll 30, and about the matrix roll 27, and between the matrix roll 27 and the felt covered roll 31, and thence over the slitting matrix roll 32 where it is acted upon by the slitting knives 33 carried by shaft 34. The shaft 34, as well as the shafts carrying the several rolls 30, 28, 31 and 32 are all mechanically driven by the gearing shown at the right in Figure 2 which, however, need not be described in detail here. It will, of course, be understood that any desired number of the disklike slitting knives 33 may be located at any desired spacing upon shaft 34 to divide the total width of the web into such appropriate lesser widths as are adapted for the particular purposes of the machine.

The present invention is more particularly concerned with the portions of the apparatus now to be described.

Portions of the opposite sides of the frame 17 are provided with projecting shoulders defining a path of movement of the ends of the successive core shafts. For convenience, these path-defining shoulders may be considered as separate guideway sections. While Figure 1 shows the inside surface of only one of the sides of the machine frame, it will be understood that the path-defining shoulders are similarly arranged at the opposite side of the frame.

There is a shoulder comprising a first guideway at 40 into which the operator may introduce the core shaft with a single unslit length of core tube extending from end to end thereof. The guideway 40 is inclined rearwardly from the operator's station at the front of the machine so that the core shaft is fed by gravity to the slitting station A at which the empty core shaft is indicated at 41 in Figure 1.

From this station, a second guideway section 42 leads downwardly at so sharp an angle as to be almost vertical. At the bottom of guideway section 42 is the second station B at which the core shaft with individual cores separated by a slitting operation rests in the position indicated.

From this position, a third guideway 44 leads forwardly, terminating at a third station C in a pocket from which the full core shaft with its load of fully wound rolls may be removed by hand. As will hereinafter be explained in more detail, the tubular core material is peripherally slit to divide it into separate cores at station A. The winding is done at station B. The core shaft is engaged in chucks and driven at both of these stations. The core shaft, carrying its burden of wound paper rolls, is delivered, while still chucked, from station B to station C and there released from the chucks while concurrently a core shaft bearing empty cores is dropped from station A to station B and is there engaged by the empty chucks following their return to station B from station C. I shall first describe the core shaft and then describe the mechanism which cooperates therewith at each of the successive stations.

The core shaft generically designated by reference character 41 is specifically illustrated in Figures 7 to 9. It comprises a tube 45 to the ends of which are fitted the plugs 46 and 47, the former being squared at 48 and the latter being tapered at 49 to engage the respective chucking means. The tube 45 is provided at spaced intervals with hardened bands, preferably made of steel and welded thereon as indicated at 50. These bands are so located as to cooperate with the core cutting disks.

Between the bands 50, the tube 45 is pierced with holes 51 opening in various directions through its periphery. Within the tube is a sack 52 of rubber or other similar material which may be dilated with air pressure to expand outwardly through the holes 51 into pressure engagement with a core 53 sleeved on to the outside of the core shaft as indicated in Figures 7 and 9. At its end the sack 52 is connected to a nipple 54 threaded into the core shaft plug member 47 and communicating with a duct 55 through which air pressure may be communicated from a special chuck shown in Figure 7 to the interior of the sack. This special chuck is used during the winding operation and, therefore, will not be described until later.

At the top of the frame is the core slitting mechanism comprising sets of coacting knife disks 60, 61 and 62, all of which are mounted for rotation. The arms 63 which mount the disks 60 do not move during the operation of the machine, being carried by a fixed shaft 64.

The disks 61 and 62 are respectively carried by arms 650 and 660 from rock shafts 65 and 66, these being intergeared for simultaneous oscillation by segments 67 and 68 (Fig. 4 and Fig. 2) which are at the right of the machine as viewed from the operator's station at the front thereof in Figure 2.

All three of the knife disks which comprise a given set are in the same plane to cut upon the same line peripherally of the core sleeve on the core shaft. The number of sets of knives will correspond to the number of separate cuts which it is desired to make in the core sleeve to subdivide it into individual cores. A sufficient number of the hardened rings 50 will be provided on the core shaft so that any reasonable number of knife sets may be employed to produce cores of any standard length. The knife sets may be shifted by moving the arms upon the respective shafts.

At the left of the machine, as viewed in Figure 2 and Figure 3, the shaft 65 is extended and provided with a hand lever 69 and with a cam section 70. Shaft 65 may also be operated indirectly by a depending arm 71 (Fig. 1) as will hereinafter be described. There is preferably a counterweight box at 72 adapted to receive counterweights of any desired value to tend to oscillate shaft 65 in a direction to bring its knives 61 into engagement with the work. It will, of course, be understood that the bias of the counterweight, as well as any manual operation of shaft 65 is communicated through the gear segments 67 and 68 to shaft 66 to produce corre-

sponding movement of the knives 62 of that shaft to and from the work.

When the new core shaft with its uncut core sleeve is deposited on the guideway 40, it cannot immediately roll into registration with the chuck because the cutting disks 60 and 61 of the several sets are too close together to permit the core shaft to pass between them. A slight oscillation of rock shaft 65, however, will lower the cutting disks 61 sufficiently so that the core shaft will roll into station A, as shown in Fig. 1.

The same oscillation of the rock shaft 65 which allows the core shaft to enter station A will also result in the retraction of the chuck shown in Figure 11. This chuck does not engage the squared end 48 of the core shaft to drive the core shaft positively. The end of the core shaft is simply engaged frictionally by the end of a spindle 73 which rotates in anti-friction bearings in a chuck sleeve 74 biased outwardly by a spring 740. The spindle 72 carries a driving gear 75 at the center of which is a cam follower 76 rotatably mounted and positioned to be acted upon by the cam 70.

The drive for the chuck spindle 72 is shown in Figure 3. A separate motor, which may be constantly in operation during the use of the machine, is provided at 77 and transmits motion through belt 78 to a pulley 79 on sleeve 80 which also carries pinion 81 meshing with gear 75 and having a wide enough surface to permit the chuck assembly in sleeve 74 to move in and out under the bias of spring 740 and the pressure of cam 70. The pulley 79, sleeve 80 and pinion 81 constitute a unit freely rotatable on the reduced extremity of rock shaft 66, being confined on the reduced end of the shaft by the collar 82, Fig. 11.

When the rock shaft 65 is oscillated counterclockwise as viewed in Figure 3 and Figure 1 to permit the core shaft 41 to roll into station A, the thin portion of the cam sector 70 will be registered with the cam follower button 76 to allow the chuck to assume its extreme left position as viewed in Figure 11 under the bias of spring 74.

When the hand lever 69 is moved clockwise as viewed in Figure 3 and Figure 1 to raise the knives 61 and 62 against the work, the work is lifted into contact with knives 60 and simultaneously the cam 70 acts on the cam follower button 76 to force the chuck assembly to the right as viewed in Figure 11, thereby engaging the end of the chuck spindle 73 with the end of the core shaft to rotate the core shaft and the core sleeve with respect to the several knives, thereby subdividing the core tube into sections according to the locations of the knife sets.

At its right hand end (as viewed in Fig. 11), the core shaft engages the slightly concave face of a yieldable centering member 84 which is reciprocable in a housing cylinder 85 and is biased outwardly under the pressure of spring 86 to the extent permitted by the disk 87 which engages sleeve 85 to limit the outward movement. The end member 47 of the core shaft finds its own center in member 84 and turns therein during the operations just described. These operations will ordinarily be performed while a winding operation is in progress at station B. The introduction of the core shaft into station A and the operations thereon at station A do not in any way affect the operation in progress at station B. However, at the conclusion of the winding operation at station B, the removal of the core shaft from that station with its load of fully wound rolls will mechanically effect a transfer of the core shaft from station A to station B by reason of the fact that the filled core shaft moving along guideway 44 from station B encounters the arms 71 thereby oscillating rock shafts 65 and 66 to remove their respective supporting knives 61 and 62 from beneath the core shaft at station A, thereby allowing the latter to drop through guideway 42 into station B, to replace the filled core shaft which is in process of removal from that station.

As clearly appears in Figure 1, the core shaft at station B rests in a pocket in the guideway 44. At the time the unloaded core shaft falls into station B, the chucks which are later to engage this core shaft do not register with station B, having moved along guideway 44 with the loaded roll.

The chucks 89 and 90 (Fig. 2 and Fig. 7) are mounted on arms 91 and 92 which are pivoted at opposite sides of the machine frame by reason of their disposition at the opposite ends of the rock shaft 93. Counterweights 94 extend to carry the rock shaft in a position in which the arms 91 and 92 project upwardly.

The chuck 89 (Fig. 2) has a socket complementary to the squared end of the terminal member 48 of the core shaft 41. Chuck 89 is rotatably mounted upon spindle 95 which turns on anti-friction bearings in the sleeve 96 which is biased by spring 97 toward a position for engagement of the chuck with the core shaft. The position of this sleeve and the associated chuck in response to the bias of spring 97 is determined by a cam follower roller 98, rotatable on the upwardly projecting gudgeon 99, and also by the detent pin 100 (Figs. 3, 5 and 6) which, in the outward retracted movement of the sleeve 96 registers with a socket 101 in the sleeve and enters the socket to hold the sleeve retracted, the pin 100 having a spool-shaped head 102 with which interacts a lever 103 under the bias of compression spring 104.

The rock shaft 93 upon which the arms 91 and 92 are mounted carries a hand lever 105 (Fig. 3) by which it may be oscillated in a clockwise direction as viewed in Figure 3 to swing the entire chuck assembly forwardly toward the operator's station, thereby to move the core shaft from station B to station C. In the path of the cam follower roller 98 with which the chuck sleeve 96 is provided, there is a stationary cam 106 on the frame of the machine which, as the core shaft approaches station C, retracts the sleeve 96 and the chuck 89 to free the end of the core shaft. The retracted sleeve is engaged by the detent pin 100 and maintained in retracted position until, in the course of its movement to the left as viewed in Figures 3 and 5, it again registers with station B. At this point, the lower end of lever 103 strikes a fixed stop 108 on the machine frame, thereby oscillating the lever in a direction to retract the pin 100 and allow the chuck and chuck sleeve to spring in under the bias of spring 97 to a position of engagement with the unloaded core shaft recently arrived through guideway 42 at station B as above described.

The chuck 90 at the right of the machine is similarly retracted. Figure 2 shows the stationary cam 106 and the cam follower roller 98 as above described. The specific construction of the chuck is different, however, and is best illustrated in Figure 7.

The chuck 90 is rotatable on the spindle 110 in the sleeve 111. The sleeve as a whole is reciprocable through the supporting arm 92 and is biased into engagement with the end of the core shaft by compression spring 112. The cam follower roller 98 and the detent pin 100 with its

controlling lever 103 and fixed stop 108 (Fig. 5) are the same as those previously described in connection with the driving chuck at the other side of the machine.

In this instance, however, the spindle 110 comprises a sleeve within which the tube 114 is both rotatable and reciprocable. In the headed end of tube 114 is a gasket 115 of fiber, felt or other suitable material which bears rotatably against the end of the tapered portion 48 of the core shaft when such tapered portion is engaged in the conically tapered end of chuck 90. A key in the form of a plug 116 engages a slot in the tube 114 to secure the tube non-rotatably to the external sleeve 111 and also to limit its axial movement. Across the opening at this end of the tube, is a cross pin 117 engageable with the stem of a valve 117a with which the air chuck 118 at the end of air hose 119 is provided. This chuck is a conventional chuck such as is used in filling automobile tires. Its valve 117a is biased to a seat not only by air pressure but by an internal spring shown in dotted lines in Figure 7. The chuck is clamped by a yoke 120 to the terminal member 121 which is screwed into, and acts as a part of, the main supporting sleeve 111. Except when the end of the core shaft is engaged with the gasket 115 to force the tube 114 to the right as viewed in Figure 7, the bias on valve 117a will hold the valve closed and will push the tube 114 to the left. However, when the respective chuck mounting sleeves are released by their respective detents to engage the ends of the core shaft at station B, the resulting pressure of the compression springs 97 and 112 causes the core shaft to exert upon gasket 115 a sufficient pressure to force tube 114 to the right, thereby unseating the valve 117a and admitting air from hose 119 into the duct 55 of the core shaft to inflate the sack 52 and thereby to dilate the said sack at the several openings 51 whereby the protruding portions of the sack engage the core 53 to fix the core securely for rotation with the core shaft during the winding operation. When not thus dilated by air pressure, the sack 52 has sufficient resilience to collapse and thereby to completely free the core tube or cores from the core shaft to facilitate the application of the core tube and the removal of the completed rolls.

The driving chuck 89 on spindle 95 receives motion in the following manner:

The pulley 125 on the main drive shaft 16 (Fig. 3 and Fig. 2) transmits motion by means of belt 126 to a pulley 127 which is carried loosely on the reduced end of shaft 93. Pulley 127 is provided at 128 with a clutch facing frictionally bearing against the face of pulley 129, the latter being independently mounted for free rotation upon shaft 93 and having a pressure nut 130 threaded to the rock shaft 93 for transmitting pressure through its bearings to vary the frictional effect of the clutch facing 128 in transmitting motion to pulley 129.

From pulley 129, which is coaxial with the rock shaft 93 upon which arm 91 oscillates, motion is transmitted through belt 132 to pulley 133 on the end of spindle 95.

The purpose of the slip clutch at 128 is to accommodate the differential driving forces applied to the several cores on core shaft 41 at station B during the winding of web material thereon. It will be noted from Figure 1 that at the commencement of the winding operation the core is in contact with the roll 32 over which the web is supplied. As the roll wound on the core increases in size, the core shaft moves to the right, oscillating arms 91 and 92 clockwise as viewed in Figures 1 and 4. Assuming that the ratio of the belt and pulley driving connections to the core shaft chuck is appropriate in the first instance to rotate the core at the same peripheral speed at which the core tends to be rotated by the feed roll 32, over which the web is supplied, the gradual increase in the size of the roll will reduce the frictional driving ratio between feed roll 32 and the wound roll of web on the core shaft and the rate of drive to the chuck would be excessive if the excess movement were not accommodated by slippage at the clutch above described.

As is usual in machines of this character, I provide a counter 135 for stopping or, at least, de-clutching the main drive motor 18 when the correct amount of paper has been wound on to the cores carried by the core shaft 41 at station B. The drive shaft 136 of the counter is connected in any suitable manner as by means of chain 137 and sprocket 138 with the main drive shaft 1. Such a counter usually contains a switch (not shown) and the electrical supply conduit 139 enters the counter and is connected through the counter to the conduit 140 leading to motor 18.

When the motor stops, the operator will actuate lever 105 clockwise, as viewed in Figure 3, thereby swinging the arms 91 and 92 and the still chucked core shaft along guideway 44 toward station C. As the core shaft moves along the guideway, it encounters the arms 71 depending from rock shaft 65 thereby oscillating rock shafts 65 and 66 and dropping from station A a core shaft upon which the core tube has been freshly slit into core sections of the desired length. Due to the fact that the core dividing operation is performed in the same machine in which the winding is accomplished and due to the fact that the cutting knives 60, 61 and 62 which act on the core are aligned with the cutting knives 33 which slit the web, it is possible to assure absolute alignment of each web section with its respective core, making hand alignment of the cores unnecessary. In the past, where the cores have been pre-cut and threaded separately on to the core shaft, unavoidable irregularities have made it necessary for the operator to align the cores by hand as it has sometimes been impossible to align them at all. By eliminating these problems, the present machine not only gives results of improved accuracy, but also accomplishes considerable time savings.

As the loaded core shaft moves from station B to station C, it stretches an unbroken line of web from the rolls on the core shaft to the supply roll 32. The unloaded core shaft dropping through guideway 42 from station A to station B falls on to this web which is thereby confined under tension beneath the freshly cut cores. When the loaded core shaft reaches station C and is unchucked from the arms 91 and 92, as above described, a cam 145 on the rock shaft 93 engages at the last movement of the rock shaft a water supply valve stem 146, the water supply valve controlling the admission of water under pressure to a pipe 147 (Figs. 1, 12 and 2). This pipe is provided at suitable intervals of perhaps eight or ten inches with spray nozzles 148 enclosed within a flat walled tapered housing 149 having an upwardly directed slot for projecting a flat spray directly against that portion of the paper web which is held under tension beneath the cores

of the core shaft newly arrived at station B. Since the web is under tension, it will, if made of tissue or other soft paper, immediately break when wet. Moreover, the wet end will adhere to the cores on the core shaft at station B. The wet end trailing from the full rolls on the core shaft at station C can readily be wound on to the full rolls by the operator who will turn the rolls by hand for this purpose, whereupon the wet end will adhere to the full rolls to prevent the full rolls from coming unwound.

Meantime the chucks will be returned to station B and engaged with the empty core shaft and the motor re-started and clutched to the machine to commence a new winding operation. The operator, after lifting the full core shaft from station C, will slide the completed rolls therefrom, thread an unslit core tube on to the empty core shaft, place the tubed core shaft in the guideway 40 and manipulate the hand lever 69 to open the cutting disks 61 and 62 and thereby to admit the core shaft to station A. He will thereupon slit the cores at station A by pulling on the hand lever 69, by which time the winding operation is approximately complete and the cycle will be repeated, the full rolls being removed from station B, automatically substituting at station B the core shaft with newly slit cores from station A.

In winding wax paper, the water cut off is unsuitable. Therefore, for wax and other relatively water impermeable papers, I use a cut off shown in Figures 13 to 15 with which, in a machine otherwise corresponding exactly to that above described, I have reduced by approximately one-half the time required to wind wax paper rolls.

In the device shown in Figures 13 to 15, a stationary knife 150 spans the machine in close proximity to the feed roll 32 over which the web is supplied and upon which it is slit.

Upon the rock shaft 155 which spans the machine immediately beneath station B is a sleeve 156 carrying a plurality of arms 157 carrying at their ends spaced members 158 and 159 constituting a receptacle into which the knife 150 is received when the arms 157 are elevated to the position in which they are shown in full lines in Figures 13, 14 and 15.

Each of the arms 157 is cut away to provide a notch at 160 of sufficient radius to provide clearance for the unloaded core shaft duly arrived at station B, the loaded core shaft having been removed to station C as shown in Figure 13. Approximately concentric with the axis of the unloaded core shaft at station B, each of the arms 157 has a slot 161 of arcuate form in which there is oscillatable a mounting member 162 which has the shape of a sector of a tube. Carried by the mounting member 162 and projecting therefrom in a direction representing a minor chord of the arcuate slot 161, is a tucking blade 165. For oscillating the mounting member 162 in slot 161 and thereby advancing the tucking blade, the mounting member 162 is provided with a gear segment 166 driven by an idler 167 from a pinion 168 mounted on the rock shaft 155. The rock shaft 155 is, in turn, provided with a pinion 169 meshing with a segment 170 at the end of lever 171, the latter being pivoted to the frame on stud 172.

During the winding operations described in connection with the first mentioned embodiment of the invention (and which are here conducted in exactly the same manner), the entire assembly of the arms 157 lies retracted beneath the guideway 44 in the position indicated in dotted lines in Figure 13. The loaded core shaft is moved out to station C, tensioning between the full rolls 173 and the supply cylinder 32 a portion of the web as previously described. The unloaded core shaft drops into station B upon the tensioned intervening web. Thereupon, by manipulating lever 171, the operator rotates the pinion 169 on rock shaft 155 and, although the sleeve 156 is not positively connected with the rock shaft, the oscillation of the rock shaft is transmitted to the sleeve through the torsion springs 175 to elevate the arms 157 and the parts connected therewith, thereby raising the web about the unloaded core shaft and the freshly cut cores thereon to the position indicated in dotted lines in Figure 13. When the receptacle comprising members 158 and 159 receives the knife 150, the web is severed. The receptacle strikes the bar 176 upon which the knife is supported and, therefore, can go no farther. This brings the sleeve 156 and the arms 157 to rest and continued movement of the rock shaft 155, accommodated by torsion springs 175, results in the transmission of motion through gears 168 and 167 to segment 166 whereby the split tube mounting member 162 oscillates through its arcuate guide slots to the position shown in Figure 14 in which the tucking blade 165 has forced the severed end of the web into the bite between the supply cylinder 32 and the cores 53 upon the core shaft at station B. The starting of the machine will now cause the end of the web to follow around the core and thereby to commence a new winding operation, whereupon the lever 171 will be moved counterclockwise as viewed in Figure 13. The torsion springs 175 will first restore the tucking blade and its semi-tubular mount to their original relative positions at the bottom of the arcuate slots 161 and thereafter the continued movement of the lever will result in retracting the entire assembly to its original dotted line position as indicated in Figure 13.

I claim:

1. The combination with means for delivering a slit web to be wound upon a plurality of cores, a set of core shafts, each adapted to support the cores to receive the severed portions of the slit web, and means for sub-dividing a core on one of the core shafts and concurrently winding the several portions of the web upon sub-divided core members carried by the other shaft, said core shafts being interchangeable in core sub-dividing and web winding positions.

2. In rewinding apparatus, the combination with a machine frame, of a web delivering roll thereon, slitting means for slitting the web prior to its delivery from said roll whereby to divide the web longitudinally into separate strips, core shaft chucking means adapted to support and rotate a core shaft in a position to support cores to receive the separate strips from said roll, a core shaft movable to and from a position for engagement with said chucking means and adapted to receive a core tube, core slitting means mounted on said frame in spaced relation to said chucking means, core shaft mounting means adapted to support the core shaft for coaction with said core slitting means to slit directly upon the core shaft the core tube mounted thereon for dividing said tube into separate cores, and guide means on said frame for delivering the core shaft from said supporting means to said chucking means with the individual cores on the core shaft in accurate registry with the strips delivered from the roll first mentioned.

3. In a single device of the character de-

scribed, the combination with web slitting and delivering means, of a core slitting means in the same device, a core shaft cooperable with both of said means, mechanism including means defining separate stations in which said core shaft co-operates with the respective web slitting means and core slitting means, and means for guiding said core shaft in movement from one of said stations to the other.

4. The device of claim 3 in which the web slitting means and the core slitting means respectively comprise slitting knives operable in substantially the same plane and the core shaft is provided with means for supporting and rotating it at each station with its axis substantially at right angles to said plane in the respective stations.

5. In a device of the character described, the combination with several core slitting disk knives of a core shaft adapted to support a core tube and providing means with which said knives coact for the slitting of the tube into separate cores directly upon said shaft, shaft supporting means engageable with said shaft at a point remote from the engagement of said knives therewith, means for delivering web strips to the individual cores on the shaft when the shaft is carried by said supporting means, means for rotating the cores when the shaft is so carried to wind the web strips upon the respective cores, and means for guiding the core shaft for movement to said supporting means from its position of engagement by said knives.

6. The device of claim 5 in which at least one of the core slitting knives is yieldably mounted in the path of movement of the core shaft toward said shaft supporting means and is retractable from said path to permit of shaft movement.

7. The device of claim 5 in combination with means for delivering a web and knives in the path of web delivery for slitting the web into separate strips, said means being in alignment in the same plane with the core slitting knife means.

8. The combination with a machine having a first core shaft station and a second core shaft station and a core shaft guideway between said stations, of slitting knife means at the first core shaft station for subdividing a core tube on said shaft into separate cores, and means at the other of said stations aligned with said knife means for delivering web strips to the respective cores in accurate registration therewith, together with means at the second core shaft station for rotating said cores to wind the registered strips thereon.

9. The structure of claim 8 in combination with means for removing a loaded core shaft from the second station, and means for synchronously advancing an unloaded core shaft from the first station to the second station.

10. The combination with a machine frame providing first and second core shaft stations and guideway means leading to the first station and from the first station to the second station and from the second station to a point of delivery, a core shaft movable along said guideway means and provided with a portion with which core slitting knives are adapted to coact, a set of core slitting knives at the first station including a knife above the position of a core shaft at said station and at least one knife therebeneath in supporting relation to such a core shaft, the core shaft being adapted to receive a core tube and the knives of said set being positioned to act on such a tube, means for moving at least one of the knives of said set toward another, whereby to force the knives of said set against the said core shaft portion to slit the core tube into individual cores, a knife beneath the position of the core shaft at said station being retractable for the delivery of said core shaft and slit cores along said guideway means toward the second station.

11. The device of claim 10 in combination with means at the second station for delivering a web toward the slit cores on the core shaft at said station, and means aligned with the knives of said set in substantially the same plane for slitting the web in the course of its delivery toward the core shaft at said station, whereby to deliver said web in strips accurately registering with the severed cores on the core shaft at said station.

12. The device of claim 10 in which the guideway means between the first and second stations is sufficiently upright to deliver the core shaft by gravity from the first station to the second station upon withdrawal of the supporting knife from beneath the core shaft and the severed cores thereon.

13. The device of claim 10 in which the guideway means between the first and second stations is sufficiently upright to deliver the core shaft by gravity from the first station to the second station upon withdrawal of the supporting knife from beneath the core shaft and the severed cores thereon, chuck means at the second station for engaging the ends of a core shaft so delivered, arms upon which said chuck means are carried, said arms being movable in a direction to carry said chuck means along said guideway means toward the aforesaid delivery point, and means in the path of movement of said core shaft with said chuck means and said arms from the second station toward the point of delivery for retracting the supporting knife of the set at the first station from the path of another core shaft at said station, whereby a new core shaft is delivered from the first station to the second station upon the removal of one core shaft from the second station toward said point of delivery.

14. The combination with a machine frame providing first and second stations and core shaft guideway means leading to the first station and thence to the second station and thence to a point of delivery, of first and second core shafts movable along said guideway means, each of said shafts being adapted to receive core tubes, a set of core tube slitting knives at the first station including at least one knife in the path of core shaft delivery along said guideway means toward the second station, said last mentioned knife being retractable, web delivering means at the second station, a web slitting knife positioned to act upon the web delivered by said means for the subdivision thereof into separate strips, said web slitting knife being accurately registered with the core slitting knives of the set at the first station aforesaid, core shaft positioning means at the second station movable along the guideway means from the second station toward the point of core shaft delivery, means for actuating said core shaft positioning means along said guideway means, and means for concurrently delivering the second core shaft from the first station to the second station and including mechanism for retracting the movable knife of the core slitting set from the path of the second core shaft and the slit cores carried thereby.

15. In a device of the character described, the combination with a machine frame providing a core slitting station and a roll winding station and guideway means leading to the first station and thence to the second station and thence to a point of core shaft delivery, said guideway means being arranged for gravity delivery of a core shaft from the first station to the second station, core shafts adapted to receive core tubes, core tube slitting knives arranged in sets at the first station, each set including at least one supporting knife in the path of core shaft delivery from the first to the second station, means for rotating a core shaft at the first station, means for advancing at least one of the knives of each set at the first station toward the core shaft, whereby to cut the core tube thereon, means for retracting the supporting knives of the several sets at the first station for delivering the core shaft and the severed cores to the second station, said retracting means including a depending lever, core shaft supporting means at the second station comprising members movable along the guideway means toward the point of delivery from the second station and chucks carried by said members and adapted for core shaft engagement, means for rotating one of said chucks at the second station, and means at the second station for delivering a web to the cores on the core shaft, and means for slitting said web in the course of its delivery to the core shaft in accurate registry with the core slitting knives, whereby the individual sections of said web are delivered to the respective cores upon said shaft in accurate registry therewith.

16. The device of claim 15 in which said depending lever is positioned to be engaged mechanically in the course of movement of said members, chuck and core shaft, from said second station toward said point of delivery, whereby mechanically to release another core shaft from the first station upon the withdrawal of a loaded core shaft from the second station.

17. The device of claim 15 in combination with means for advancing said members from the second station toward the point of delivery, and means for automatically retracting said chuck means from the loaded core shaft at the point of delivery.

18. The device of claim 15 in combination with means for advancing said members from the second station toward the point of delivery, and means for automatically retracting said chuck means from the loaded core shaft at the point of delivery, detent means for holding said chuck means retracted pending the return of said members, and means at said second station for releasing said detent means upon return of said members to the second station, said chuck means being biased for engagement at said second station upon release of said detent means with the core shaft delivered thereto from the first station.

19. In a machine of the character described, the combination with a web delivering roll, chuck means for supporting a core shaft to receive said web and disk knives positioned in the path of web advance to slit the web into strips delivered from said roll, of sets of disk knives positioned above the web slitting knives, means for supporting a core shaft between the knives of said sets, said core shaft being adapted to receive a core tube and the knives of said sets being operable upon said tube against the core shaft for subdividing the core tube into separate cores, the knives of said sets being in the same planes as the knives for slitting the web and at least one knife of each set being retractable from a predetermined path of core shaft delivery, whereby a core shaft bearing cores slit thereon may be delivered to said chuck means to position said cores in accurate registration with web strips to be wound thereon.

20. In a device of the character described, the combination with a core shaft and means for the rotation thereof, said core shaft being adapted to receive a core tube, of a set of cutting disks, arms supporting the respective disks at different sides of the core shaft and in the same plane, rock shafts upon which a plurality of said arms are movable to advance and retract their respective disks to and from another disk of said set and to and from the core shaft engaged between the several disks of said set, means for axially advancing and retracting the core shaft rotating means to and from core shaft engagement, and motion transmitting connections operatively connecting said advancing and retracting means with one of said rock shafts for advancing the core shaft rotating means into core shaft rotating engagement when said rock shaft moves the cutting disk supported thereby toward the core shaft.

21. In a device of the character described, the combination with means providing a winding station, of chuck means for core shaft engagement at said station, mounting members for the respective chuck means provided with connections for corresponding movement from said station toward a point of core shaft delivery, means biasing said chuck means on the respective mounting member toward positions of core shaft engagement, said chuck means being retractable from said positions against their bias, cam means adjacent said point of delivery for retracting said chuck means upon their respective mounting members as they approach said point of delivery, whereby to release a core shaft at said point, detent means on the respective members engageable with the chuck means in the retraction thereof and adapted to hold said chuck means retracted pending the return of said members to said station, and means at said station for releasing the respective detent means and thereby releasing the respective chuck means for engagement with a new core shaft at said station.

22. In a device of the character described, the combination with a machine frame providing a winding station and means for delivering web strips thereto, of arms pivoted below said station, chuck means biased toward core shaft engaging positions and retractably mounted upon the respective arms for movement thereon from said station to a point of core shaft delivery, means connecting said arms for concurrent movement, means for driving one of the chuck means at said station, cam means on the frame adjacent the point of delivery for retracting the chuck means from the core shaft engaged therebetween, detent means on each arm engageable with the respective chuck means in the retracted positions thereof to maintain the chuck means retracted pending the return to said station, said detent means comprising a pin biased toward chuck retracting position and a lever connected with the pin for the withdrawing thereof, and stop means at said station positioned to be engaged by the respective levers for the withdrawing of the respective detent pin at said station, whereby to release the respective chuck means for engagement with a core shaft of said station for the rotation thereof.

23. In a device of the character described, the combination with a machine frame providing a

winding station and means for delivering a web strip thereto, of first and second core shafts each adapted to receive core means and successively movable to said station and from said station to the point of delivery, power driven chuck means for engaging successive core shafts at said station during the winding of said web strip upon the core means of said shaft, mechanism for advancing said chuck means from said station toward a point of core shaft delivery with said web strip extending from said delivering means toward said point of core shaft delivery, mechanism for delivering the successive core shaft and core means thereon onto said strip at said station, and means below said strip at said station for severing said strip and attaching a free end thereof to core means on the core shaft newly arrived at said station.

24. The device of claim 23 in which said severing means comprises at least one liquid nozzle below said strip and means for the controlled delivery of a spray of liquid from said nozzle onto the lower surface of said strip and toward the core means resting thereon.

25. In a device of the character described, the combination with a machine frame providing a winding station and means for delivering a web strip thereto, of a core shaft supporting core means at said station, another core shaft remote from the said station and to which said web strip extends beneath the core means first mentioned, a housing below said station provided with a delivery slot directed toward the core means at said station and the web strip therebeneath, and means within said housing for delivering spray through said slot upon said web strip for the severance thereof and the adhesion of the severed end to the core means resting thereon.

26. In a device of the character described, the combination with a web delivering cylinder, of chuck means adapted to support a core shaft and cores adjacent said cylinder to receive web delivered therefrom, members upon which the respective chuck means are mounted, said members being movable with said chuck means to and from said cylinder, a housing adjacent the cylinder and below the chuck means and provided with an outwardly directed delivery slot, and means within said housing for delivering spray upwardly through said slot.

27. The device of claim 26 in combination with means for advancing said members and chuck means from said cylinder, and means operable in the course of said advance for actuating said spray delivering means.

28. The device of claim 26 in combination with means for advancing said members and chuck means from said cylinder, means for delivering a new core shaft and core means into position above said slot upon a web strip delivered by said cylinder, said delivering means being operable in the course of advance of said members from said cylinder, and means operable following the delivery of the core shaft and core means upon said web strip for actuating said spray delivering means against the strip and the core means resting thereon.

29. In a device of the character described, the combination with a hollow core shaft peripherally apertured, of an inflatable sack within said shaft having portions adapted when inflated to project from the shaft for engagement with a core thereon, and chuck means for said shaft including air supply connections to said sack.

30. In a device of the character described, the combination with a hollow core shaft peripherally apertured and an inflatable sack within the core shaft having portions adapted when inflated to project through the apertured periphery of the shaft, an axially retractable chuck for said shaft, a second chuck for said shaft provided with an air supply tube, said shaft having a duct registerable with said tube and communicating with said sack, and a valved air supply fitting with the valve of which said tube is engageable for the opening of the valve under pressure of said shaft, whereby the engagement of the retractable chuck with one end of the shaft transmits pressure through the shaft to said tube for the opening of said valve and the inflation of said sack, one of said chuck means being provided with driving connections.

31. In a device of the character described, a hollow core shaft having axially spaced peripheral apertures positioned to register individually with cores on said shaft and an internal sack beneath a plurality of such apertures and through the intervening part of the shaft, said sack having portions expansible when inflated to project from the apertured periphery of the shaft through the several apertures for engagement with a core thereof, and means for inflating said sack.

32. In a device of the character described, a core shaft having a peripherally apertured tubular portion in which the apertures are axially spaced, core clutching means radially movable through the apertures, means for projecting said core clutching means through the apertures, and hardened members encircling said shaft intermediate said apertures and providing a surface adapted to coact with a slitting knife, together with a set of slitting knives coacting with said members for the cutting of cores directly upon the shaft in positions such that intermediate portions of the resulting cores may be engaged by said core clutching means.

33. In a device of the character described, the combination with a core shaft and pneumatically operable work engaging means carried thereby, said shaft having at one end a duct communicating with said means, of chucks respectively engageable with the ends of said shaft, one of said chucks being provided with an air supply connection for said duct, mounting members in which said chucks are axially movable, means biasing each chuck toward a position of shaft engagement, means for retracting the respective chucks from shaft engagement and means for driving at least one of said chucks.

34. The device of claim 33 in combination with means for concurrently moving the chuck mounting members, the chuck retracting means comprising cam followers upon the respective chucks and stationary cams engageable by said followers in the course of advance of said members.

35. The device of claim 33 in combination with means for concurrently moving the chuck mounting members, the chuck retracting means comprising cam followers upon the respective chucks and stationary cams engageable by said followers in the course of advance of said members, detents mounted on the respective members and comprising pins engageable with the respective chucks in the retracted positions thereof to hold said chucks retracted, and stationary means engaged by said detents in another position of said member for the release of the respective detents.

36. The combination with a web delivering cylinder, of a core shaft positioned to rest upon

242. WINDING & REELING,
56
Examiner

a web delivered therefrom, a stationary knife at one side of said shaft, arm means pivoted at the other side of the shaft and providing a member movable across the path of said web means and about said shaft into engagement with said knife to move said web means partially about said shaft and thereafter to sever said web means against said knife.

37. The device of claim 36 in combination with a tucking blade mounted upon said arm means and provided with connections for the actuation of said blade following the severing of said web in a direction to deliver the cut end of the web between said shaft and cylinder, whereby to substantially complete the winding thereof about the shaft.

38. In a device of the character described, the combination with a core shaft adapted to support a core, of a set of arms pivoted beneath said shaft and formed to extend arcuately about said core when moved into proximity thereto, said arms having arcuate guide means approximately concentric with the core, a tucking blade support of semi-tubular form oscillatable in said guide means, a tucking blade carried by said support, and actuating connections for said arms including lost motion and yieldable connections to said tucking blade support for the operation thereof upon the conclusion of arm movement.

39. In a device of the character described, the combination with a web delivering cylinder, of core shaft chucks adjacent the cylinder adapted to receive a core shaft and to support a core in immediate proximity to the cylinder, a stationary knife above said chucks, a rock shaft below the chucks, arms mounted on the rock shaft and movable toward the position of a core shaft in said chucks and provided with arcuate notches to receive the core shaft and the core thereon, arcuate guide means carried by said arms, a semi-tubular supporting member oscillatable in said guide means, a tucking blade carried thereby for movement with said member about a core shaft and core supported by said chucks, means carried by the arms co-operable with said knife for causing the severance of a web lifted by said means when said arms are raised toward said position, and actuating connections for raising said arms, said connections including driving connections to said supporting member, and lost motion spring connections to said arms, whereby said arms are raised to a position of interaction with said knife to sever a web delivered from said cylinder and, upon the stopping of arm movement, said supporting member continues to move to actuate said chucking blade.

40. A method of the character described, which comprises the slitting of a web into strips, the rotation of a core shaft bearing a plurality of cores in registry with the respective strips, and the winding of the strips upon the cores registering therewith, the simultaneous slitting of a core tube upon another core shaft upon peripheral lines in substantial registry with the respective strips, the removal of the first core shaft and the release of web strips wound on the cores thereof, and the substitution of the second core shaft and its newly slit cores in winding position while substantially maintaining registry between the cores and the respective strips, and the winding of the respective strips upon the newly cut cores registered therewith.

41. A method of the character described including the rotation of a core shaft and a core, the winding of a web upon the core, the lateral removal of the core shaft from winding position prior to the severance of the web while continuing core shaft rotation to maintain web tension, the deposit of a new core shaft and core in winding position resting against the unsevered web while maintaining web tension, the subsequent severance of the web and application thereof to the core of the substituted core shaft and the projection of a moistening spray upwardly from beneath the web against the web at the point where the core of the substituted shaft rests thereon.

42. A method of the character described, which comprises the positioning of a core tube on a core shaft, the cutting of the tube at a plurality of points peripherally of the tube and spaced axially along the core shaft whereby to divide the tube into separate cores, and the subsequent clutching of each individual core to the core shaft intermediate its ends and the rotation of the core shaft and the cores clutched thereto, and the winding of web strips upon the respective cores.

43. A method of winding rolls of paper in which the steps recited in claim 42 are repeated upon successive core shafts, the peripheral slitting of a core tube on one shaft being carried on concurrently with a winding of paper strips upon the cores of a preceding shaft at different stations with the cores at the core slitting station in substantial registry with the strips at the winding station, and the transfer of each core shaft from one station to the other while maintaining substantial registry between the cores and the strips.

44. The combination with a web delivering cylinder and a core shaft for supporting a core in proximity to said cylinder upon a web delivered from said cylinder, of means for cutting said web and wrapping it about said core, said means comprising the cooperating web severing members, one of which is located at one side of the path of the web and one of which is located at the other, carrying arms for the last mentioned member, means for actuating said arms in a direction to move said last mentioned member toward the first mentioned member across the path of the web and into a position of engagement of the respective members whereby to sever the web, a tucking blade carrier mounted on said arms for movement with the second member, a tucking blade mounted on the carrier and lost motion connections operable by said arm actuating means for continuing movement of the tucking blade after said members coact to sever the web, said tucking blade being movable upon said carrier to deliver the cut end of the web about said core.

45. A method of the character described including the rotation of a core shaft and a core, the winding of a web upon the core, the lateral removal of the core shaft from winding position prior to the severance of the web, the deposit of a new core shaft and core in winding position resting against the unsevered web, while maintaining said web under tension, the preliminary folding of a bight of the web beyond the new core shaft about the core on the new core shaft, the severance of the portion of the web so folded about the core, and the tucking of the free end of the web about the core and between the core and the web approaching the core to complete encirclement of the core.

46. Rewinding apparatus, including the combination with a set of core carrying shafts, of a supporting frame provided with infeeding and outfeeding core shaft guideways having their inner ends connected by a shaft transferring guideway, core subdividing mechanism at the junction

of the infeeding and transferring guideways, web slitting and rewinding mechanism at the junction of the transferring and outfeeding guideways, means for centering and chucking shafts at both junctions, and power driven actuating connections for the respective mechanisms.

47. The apparatus set forth in claim 46 in which the infeeding transferring and outfeeding guideways are consecutively downwardly inclined for gravity assistance in the movement of successive core carrying shafts through such guideways in series.

48. In rewinding apparatus, the combination with a rotary matrix roll and associated web slitting devices, of a set of core engaging and centering chucks, swinging supports therefor adapted to normally urge a core shaft with a set of core members thereon into juxtaposition to the matrix roll and registry with the respective slitted portions of the web, power driven connections for rotating one of the chucks, means associated with one of the chucks for temporarily securing the core members to the shaft for rotation therewith, and means for swinging the chuck supports to carry the shaft and rewound rolls away from said matrices to a point of chuck release and roll delivery.

49. In a web rewinding apparatus, the combination with a frame providing a rewinding station equipped with means for progressively delivering a web strip thereto, of a mandrel for supporting and rotating cores at said station for winding the web strip thereon, means for advancing said mandrel and wound cores from said station to a point of delivery, an auxiliary support for empty cores, means for guiding the movement of said auxiliary support and empty cores toward said station, a detent for restraining said support from movement toward said station and mechanism for releasing said detent including an acuator in the path of advance of said mandrel in the course of delivery of a completed roll whereby the movement of a completed roll will automatically release said detent for the delivery of the auxiliary support to said station.

50. The combination with web rewinding apparatus including a winding station provided with power actuated winding mechanism and means for advancing rolls therefrom during completion of a winding operation, of an auxiliary support for empty cores and core carrying shafts, a movable member in the path of the advancing rolls, connections for transmitting motion from said movable member to release an empty core and its carrying shaft from the auxiliary support and a guide for directing the released shaft to said winding mechanism.

51. Web slitting and rewinding apparatus including the combination with a web feeding roll and associated web slitters, of a frame guide adapted to support a core shaft and core members thereon in juxtaposition to the matrix roll, thereby providing a winding station, shaft engaging chucks reciprocable between said station and a point of delivery for completed rolls, web feeding members movable in an arcuate path upwardly and about core members supported by a core shaft at said station, means for severing the folded portion of the web, and auxiliary means for tucking the following end of the severed portion into the bight formed by the core members with the feed roll.

52. In a device of the character described, the combination with a web delivering feed roll, of a core shaft, core shaft chucks movable into and out of position adjacent to said roll, a stationary shear member above said position, a cooperative shear member and tucking blade assembly normally located below said position and supported for arcuate movement about a core shaft in such position, said assembly including a tucking blade resiliently connected with the auxiliary shear member and adapted for additional arcuate movement to a position for tucking a severed web into the angle between the feed roll and core shaft, means for advancing a rewound roll from said position to extend the web over the path of the tucking blade, and means for actuating the tucking blade to successively fold the web about a core shaft and core to bring the shear members into engagement and the tucking blade to tucking position, whereby the following end of a severed web may be folded about an empty core and pressed into the bight between it and the feed roll for a further winding operation.

53. In a machine of the character described, the combination with a machine frame providing a core slitting station and a winding station at a lower level than the core slitting station, said frame having means providing a core shaft guideway leading downwardly to said stations successively and thence from the winding station to a point of delivery, rotatable supports at the slitting station normally in such proximity as to maintain at said station a core shaft and core delivered thereto upon said guideway, a retractible carrier for at least one of said supports, the retraction of the carrier being adapted to withdraw the support from the core shaft and core to permit the advance thereof along the guideway toward the winding station, a power driven chuck at the winding station engageable with a core shaft delivered to said station, an arm upon which said chuck is oscillatable along the guideway leading from the winding station toward the point of delivery, means for driving said chuck irrespective of its position whereby said chuck and a core shaft engaged therewith may be continuously driven at the winding station and in the course of its movement along the guideway toward the point of delivery, and an arm in the path of advance of the chuck and core shaft moving between the winding station and the point of delivery, said arm being connected with said carrier for the retraction of said carrier when said arm is engaged in the course of such core shaft movement toward the point of delivery, whereby to permit the movement of another core shaft to the winding station.

54. In a device of the character described, the combination of a hollow core shaft provided with peripheral apertures, of an inflatable sack extending axially within said shaft and adapted, when inflated, to be projected through said apertures for engagement with a winding core on the shaft, and a shaft actuating chuck, engageable with one end of the shaft and connected with a source of air supply under pressure, a valve controlling deliveries of air from said source of supply and an axially movable tubular member carried by the chuck and adapted, when under pressure contact with the core shaft, to open the air valve and connect the source of air supply with said sack to inflate the same, said air being automatically released from said sack when the shaft rotating chuck is retracted.

55. In a device of the character described, the combination of a hollow core shaft provided with an inflatable core clutch portion, of a shaft actuating chuck adapted to resiliently engage the

core shaft, and connections carried by the chuck for automatically connecting the inflatable portion of the shaft with a source of air supply under pressure while the chuck and shaft are in shaft actuating engagement.

56. A method of the character described, which comprises the successive positioning of core tubes upon a plurality of core shafts, intermittently advancing the shafts and tubes, subdividing the tube on each shaft after one intermittent advance, and winding web strips upon the subdivided core members after a further shaft advance, while the core on a following shaft is being subdivided.

57. A method of the character described, which comprises the feeding of a succession of core tubes successively along a path leading outwardly from an operator's station, subdividing the core tubes at one stage of advance along said path, winding such strips on the subdivided cores at another stage of their advance along said path and returning the cores to the operator's station with the completed rolls thereon.

58. The device of claim 36, in further combination with a second core shaft upon which a portion of said web delivered from said cylinder is wound, a support for the second core shaft movable away from said cylinder whereby to tension the web between the second core shaft and the cylinder, means for guiding the first mentioned core shaft for movement toward its said position of rest upon the delivered web between the cylinder and the second core shaft, said member being normally retracted at the side of the tensioned web toward which said web is deflected as the first mentioned core shaft moves to its said position of rest on the web, and means for actuating said member in a direction opposite to the direction of web deflection and about said first mentioned core shaft for engaging said web with said knife.

59. The device of claim 36, in further combination with a second core shaft upon which a portion of said web delivered from said cylinder is wound, a support for the second core shaft movable away from said cylinder whereby to tension the web between the second core shaft and the cylinder, means for guiding the first mentioned core shaft for movement toward its said position of rest upon the delivered web between the cylinder and the second core shaft, said member being normally retracted at the side of the tensioned web toward which said web is deflected as the first mentioned core shaft moves to its said position of rest on the web, and means for actuating said member in a direction opposite to the direction of web deflection and about said first mentioned core shaft for engaging said web with said knife, together with a tucking blade engageable with the severed end of the web and movable in a direction toward completion of the envelopment of the core shaft first mentioned, and means for actuating said tucking blade.

60. The combination set forth in claim 36, in further combination with means for the rotation of said core shaft, a support for the end of the web delivered from the cylinder, said knife lying at one side of the web and said member at the other, and means for advancing said member toward said knife and across the path of the web between said cylinder and said support.

61. The combination set forth in claim 36, in further combination with means for the rotation of said core shaft, a support for the end of the web delivered from the cylinder, said knife lying at one side of the web and said member at the other, and means for advancing said member toward said knife and across the path of the web between said cylinder and said support, together with a tucking blade movably connected with said member and actuatable independently thereof for tucking about the partially enveloped core shaft the end severed by said knife, and means for actuating the tucking blade upon the severance of said web by said knife.

62. The combination set forth in claim 36, in further combination with means for the rotation of said core shaft, web winding means upon which a portion of the web delivered from the cylinder is wound upon the positioning of said core shaft to rest upon the web, means for actuating said member to form a bight of said web about said core shaft, said knife comprising means for severing the web at said bight, together with a tucking blade supported by said arm means and movable thereon with said member, said tucking blade being mounted for movement independent of said member and provided with actuating connections for the actuation of said blade following the severing of the bight of said web in a direction to deliver the cut end of the web between the cylinder and core shaft, whereby to substantially complete the winding thereof about the core shaft.

SAMUEL J. CAMPBELL.