United States Patent [19]

Lichowsky

[11] **Des. 244,235**

[45] ** **May 3, 1977**

[54] **AUTOMATIC BLOOD PRESSURE MEASURING APPARATUS**

[75] Inventor: **Abraham Lichowsky**, Los Angeles, Calif.

[73] Assignee: **Medical Monitors, Inc.**, Los Angeles, Calif.

[**] Term: **14 Years**

[21] Appl. No.: **609,203**

[22] Filed: **Sept. 2, 1975**

[51] **Int. Cl.** ..... **D24—01**
[52] **U.S. Cl.** **D24/21**
[58] **Field of Search** ..... 128/2.05 Q, 2.05 M, 128/2.05 G; D83/12 R, 1 F

[56] **References Cited**

U.S. PATENT DOCUMENTS

2,053,383	9/1936	Telson et al.	128/2.05 M
2,149,690	3/1939	Snyder	128/2.05 M
3,543,745	12/1970	Rosenstein	128/2.05 G
3,905,353	9/1975	Lichowsky	128/2.05 G

Primary Examiner—Bernard Ansher
Attorney, Agent, or Firm—Ralph B. Pastoriza

[57] **CLAIM**

The ornamental design for an automatic blood pressure measuring apparatus, substantially as shown.

DESCRIPTION

FIG. **1** is a perspective view of an automatic blood pressure measuring apparatus showing my new design;
FIG. **2** is an elevation thereof showing the side not visible in FIG. **1**;
FIG. **3** is a front elevational view thereof;
FIG. **4** is a top plan view thereof;
FIG. **5** is a rear elevational view thereof; and,
FIG. **6** is a bottom plan view thereof.

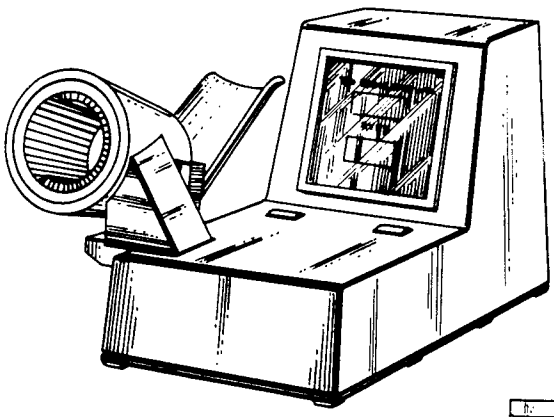

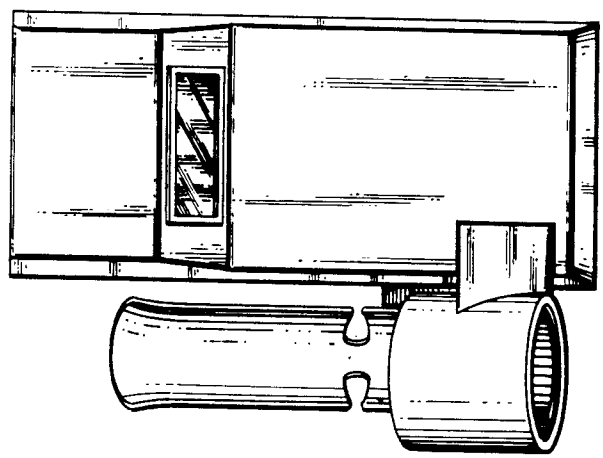

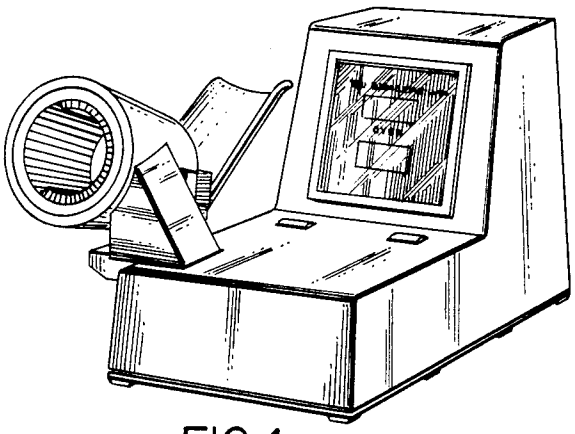

FIG.1

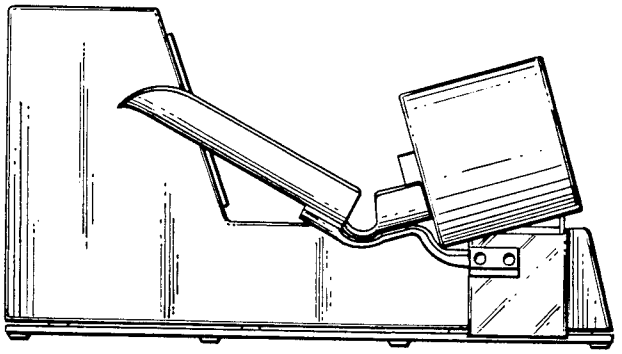

FIG.2

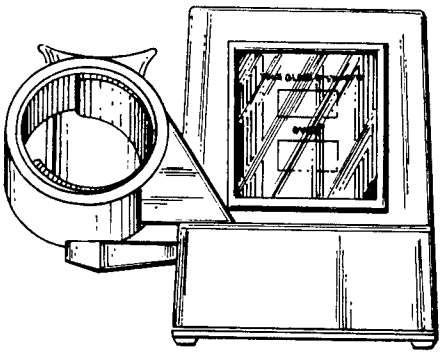

FIG.3

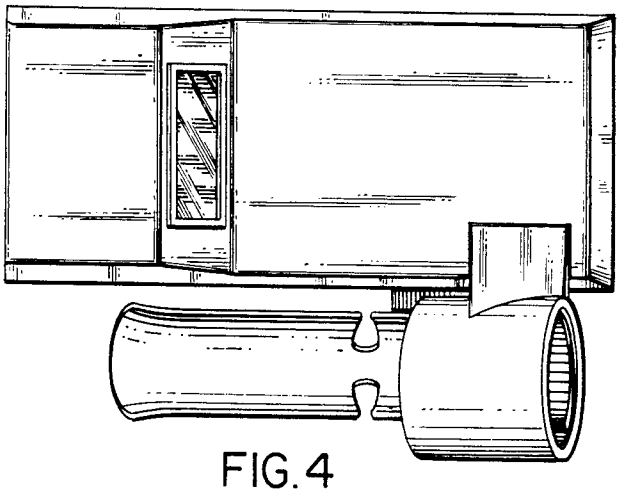

FIG.4

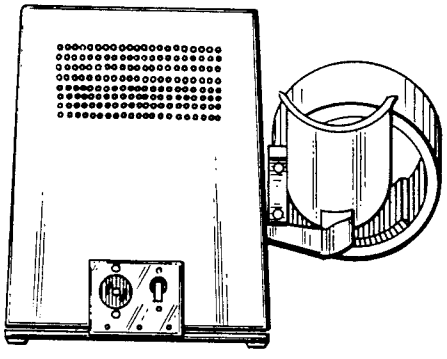

FIG.5

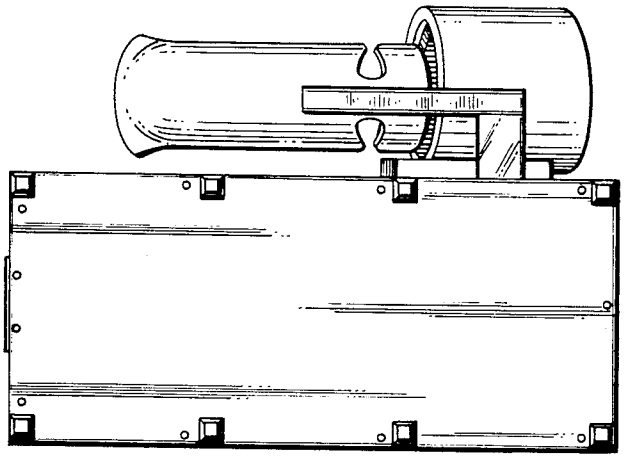

FIG.6